Murphy Bed

Assembly Instruction - Please keep properly for future reference.

If you find any missing boxes, damaged parts, or accessory shortages, please contact the customer service team of your purchasing channel immediately. We will resolve the issue as quickly as possible.

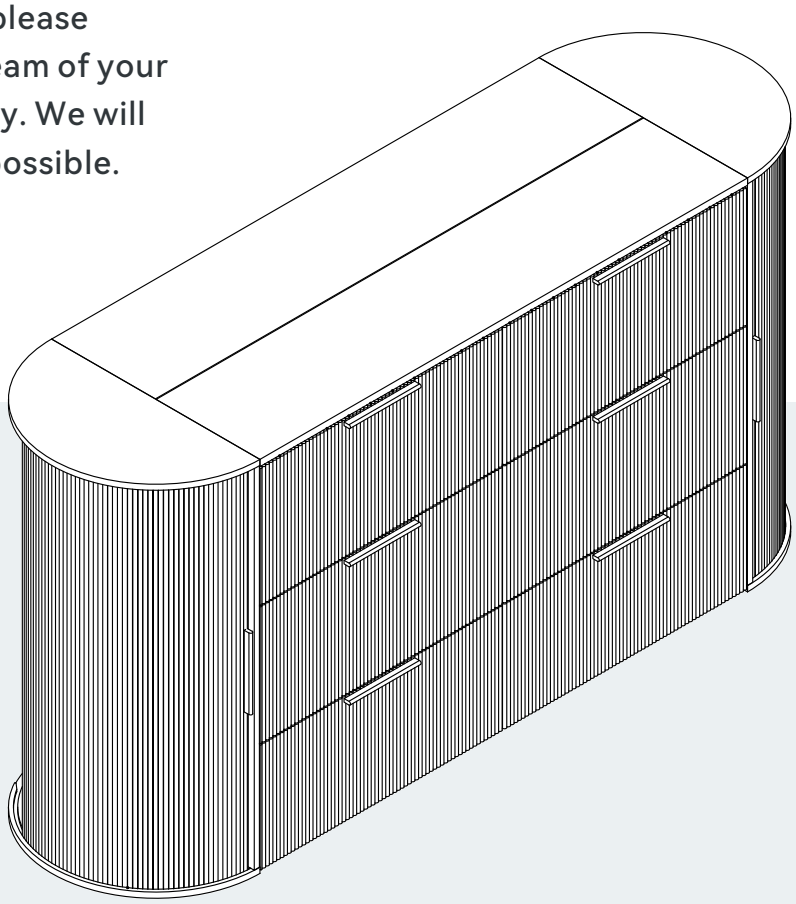

Arrive in 2 separate boxes and may not be part of the same shipment; Please install the product after receiving all the packages.

Dimensions

Width - 77.5 inch
Depth - 23.2 inch
Height - 39.6 inch

CONTACT US

- In order to receive assistance more quickly, please provide

THE FOLLOWING INFORMATION:

- Order number
- Purchase platform
- Purchase date
- Detailed description of the issue along with photos (if applicable)

EN

Important – Please read these instructions carefully before starting the installation.

⚠ Safety and Care Advice

Important – Please read these instructions fully before starting assembly

• Check you have all the components and tools listed on the following pages.

• Remove all fittings from the plastic bags and separate them into their groups.

• Keep children and animals away from the work area, small parts could choke if swallowed.

• Make sure you have enough space to layout the parts before starting.

• During assembly do not stand or put weight on the product, this could cause damage.

• Assemble the item as close to its final position (in the same room) as possible.

• Assemble on a soft level surface to avoid damaging the unit or your floor.

• Parts of the assembly will be easier with 2 people.



• To reduce the likelihood of damaging your product please ensure that your power drill is set on a low torque setting.

Care and maintenance

• Only clean using a damp cloth and mild detergent, do no use bleach or abrasive cleaners.

• From time to time check that there are no loose screws on this unit.

• This product should not be discarded with household waste. Take to your local authority waste disposal centre.

Handy Hints

• Assemble all parts and bolts loosely during assembly, only once the product is complete should you fully tighten the bolts

• Regularly check and ensure That all bolts and fittings are tightened properly.

WARNING
In order to help prevent overturning – please follow these instructions

To help prevent product toppling over please follow the below steps:

Use the anti tip stap or wall fixing method provided (if applicable)
Do not allow children to climb or hang on the furniture
Do not open more than one drawer at a time
Do not place heavy items in the top drawers
Do not place heavy items on top of the furniture, unless the furniture has been designed for this purpose

Please note that only the anti tip strap is provided.
You will need to provide wall plugs and screws applicable for your wall type

Safety Instructions / Warnings

Please read and follow all instructions carefully before installation and use.

- **WARNING: Risk of electric shock – Do not open or disassemble electrical parts.**
- **Use only the power cord specifically provided for this product. Plug Input: AC 125V, 50/60HZ, 12A, 1500W. USB Output: DC 5V, 2.1A.**
- Do not use with damaged power cords or plugs.
- Keep power cables away from moving or sharp parts of the furniture.
- Do not use extension cords or power strips unless specifically approved for the load.
- This product is **not a toy**. Do not allow children to play with electrical components or moving parts.
- Children under 8 years old must be kept away from the furniture unless continuously supervised.
- Keep remote controls, control switches, and ports **out of children's reach**.
- Always **disconnect the product from power** before cleaning, maintenance, or relocation.
- Do not attempt to open, modify, or repair electrical components.
- **Repairs must be performed by qualified professionals only.**
- Do not insert any foreign objects into openings or mechanisms.
- Clean with a dry cloth or a slightly damp soft cloth. Do not use solvents.
- This product is intended for **indoor use only** in dry environments.
- Do not expose the furniture to moisture, liquids, or direct sunlight.
- Ensure stability and clearance around any moving parts (e.g., lift mechanisms, recliners).
- Do not overload power outlets or USB ports beyond the specified ratings.

FCC Information

CAUTION: Changes or modifications not expressly approved by the party responsible for compliance could void the user's authority to operate the equipment!

This device complies with Part 15 of the FCC Rules. Operation is subject to the following two conditions:
1. This product may cause harmful interference.
2. This product must accept any interference received, including interference that may cause undesired operation.

WARNING: Changes or modifications to this product not expressly approved by the party.responsible for compliance could void the user's authority to operate the product.

Note: This product has been tested and found to comply with the limits for a Class B digital device pursuant to Part 15 of the FCC Rules, These limits are designed to provide reasonable protection against harmful interference in a residential installation.

This product generates, uses and can radiate radio frequency energy, and if not installed and used in accordance with the instructions, may cause harmful interference to radio communications. However, there is no guarantee that interference will not occur in a particular installation. If this product does cause harmful interference to radio or television reception,which can be determined by turning the product off and on, the user is encouraged to try to correct the interference by one or more of the following measures.

- Reorient or relocate the receiving antenna.
- Increase the distance between the product and receiver.
- Connect the product to an outlet on a circuit different from that to which the receiver is connected.
- Consult the dealer or an experienced radio/TV technician for assistance.

CUSTOMER SERVICE GUIDE

Thank you for choosing our product! We are committed to providing you with excellent service. If you find any missing parts, damaged packaging, or product damage after receiving all packages, please follow the steps below to quickly contact our customer service team. We will do our best to resolve your issue.

1. Missing Parts

Verify Parts:

1. Refer to the “Parts List” in the manual to verify the name, specifications, and quantity of the missing parts.
2. Take a clear photo of the parts list and mark the missing parts with detailed information, e.g., “Missing 5 pieces of M6x30mm screws.”

Contact Us:

· By Email:

Send an email with the subject line "Missing Parts Issue." Include the following in the email:

· A description of the missing parts and a photo of the parts list.
· Order details (order number, purchase platform, purchase date).

2. Product or Packaging Damage

If it affects normal use:

Steps:

1. Take clear photos or videos showing the damaged parts and the extent of the damage (multi-angle shots are recommended).
2. Email the photos/videos along with other details with the subject line "Product Damage Issue."

Resolution:

After verification, we will arrange for a replacement part, product exchange, or refund as quickly as possible.

If it does not affect normal use:

Steps:

1. Contact our customer service team.
2. Provide a description of the damage and include relevant photos or videos.

Resolution:

We will provide repair guidance or an appropriate compensation plan based on the specific situation.

Helpful Tips

To process your issue efficiently, please prepare the following information:

· Order details (order number, purchase platform, purchase date).
· Clear photos or videos.
· We are committed to providing quick and professional solutions, no matter the size of the issue, to ensure your satisfaction.

Thank you for your trust and support! We hope you enjoy using our product!

Part List - Panels (Box 1)

Please check you have all the panels listed below

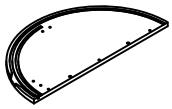

3 (590*295*15mm x1)

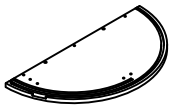

4 (590*295*15mm x1)

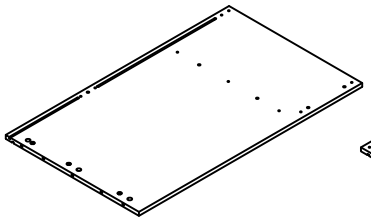

5 (985*588*15mm x1)

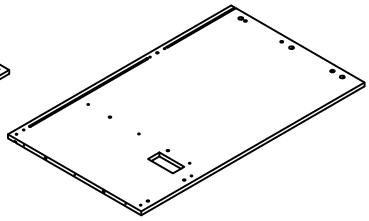

6 (985*588*15mm x1)

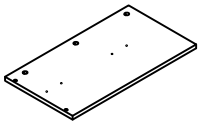

8 (545.5*298*15mm x1)

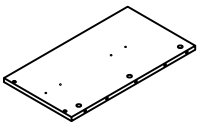

9 (545.5*298*15mm x1)

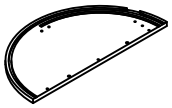

12 (590*295*15mm x1)

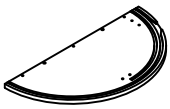

13 (590*295*15mm x1)

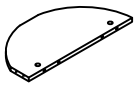

14 (456*218*15mm x1)

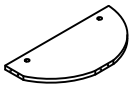

15 (456*218*15mm x1)



16 (298*80*15mm x2)

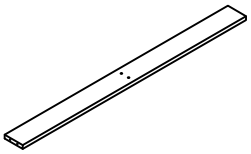

17 (985*80*15mm x4)

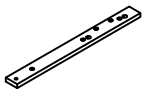

18 (544*50*15mm x1)

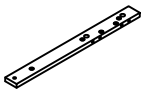

19 (544*50*15mm x1)

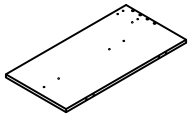

21 (530*265*12mm x1)

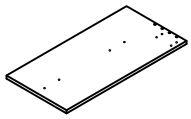

22 (530*265*12mm x1)

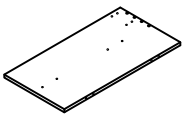

24 (512*265*12mm x1)

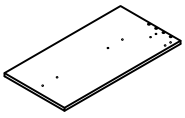

25 (512*265*12mm x1)

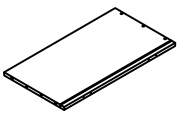

27 (490*265*12mm x1)

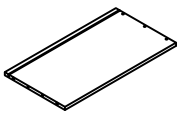

28 (490*265*12mm x1)

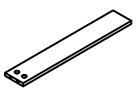

30 (477*80*12mm x2)



36 (995*401*12mm x2)

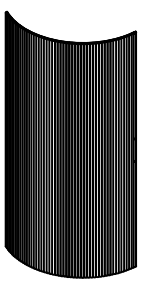

37 (995*545*12mm x2)

Part List - Panels (Box 2)

Please check you have all the panels listed below

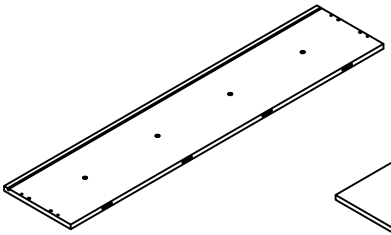

1 (1380*294*18mm x1)

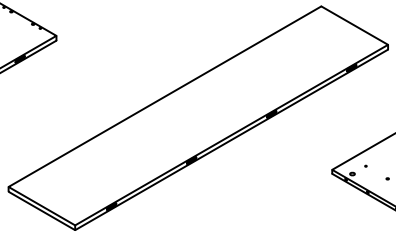

2 (1380*294*18mm x1)

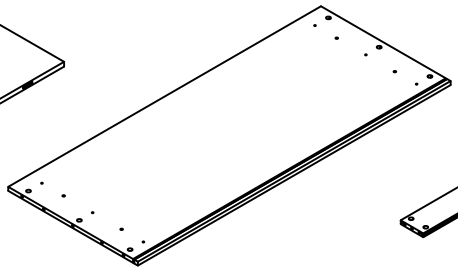

7 (1380*572*15mm x1)

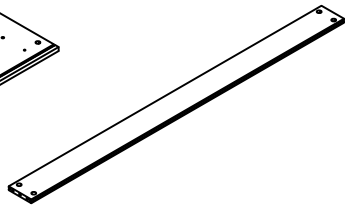

10 (1380*100*15mm x1)

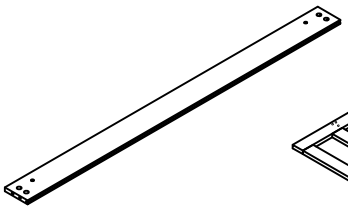

11 (1380*100*15mm x1)

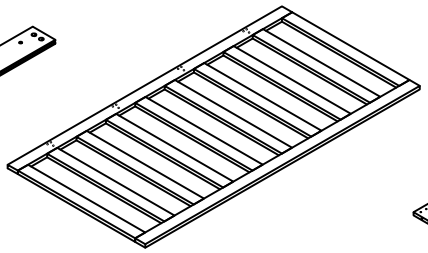

20 (1345*675*15mm x1)

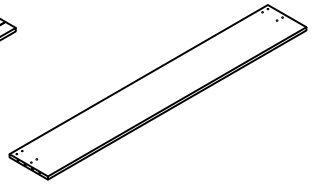

23 (1140*170*12mm x1)

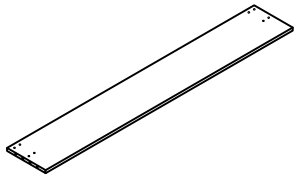

26 (1090*170*12mm x1)

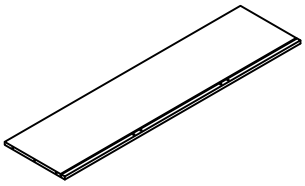

29 (1040*265*12mm x1)

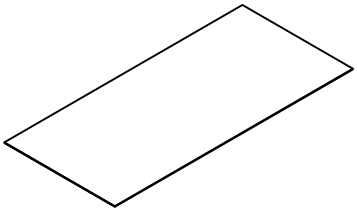

31 (1050*487*3mm x1)

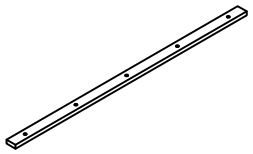

32 (1020*40*15mm x1)

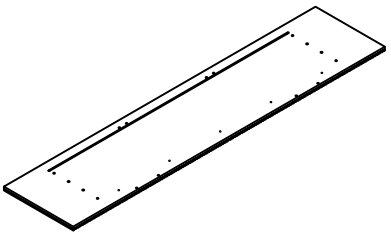

33 (1375*306*15mm x1)

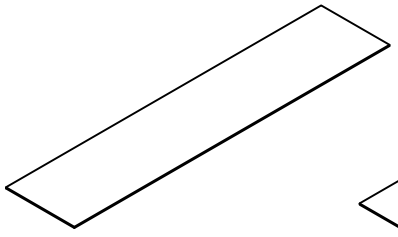

34 (1390*301.5*5mm x2)

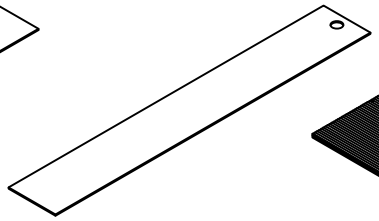

35 (1390*207*5mm x1)

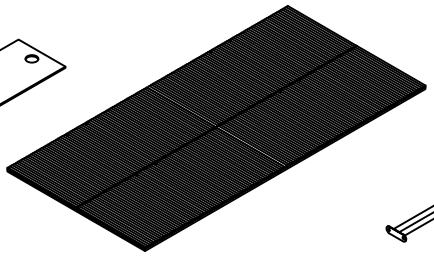

38 (1375*675*15mm x1)

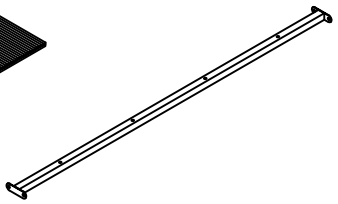

39 (1349*85 (25) *25mm x1)

Parts List - Fittings (in Box 1)

Please check you have all the fittings listed below

Note: The quantities below are the correct amount to complete the assembly. In some cases more fittings may be supplied than are required.

A 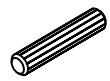 x 36+2 Ø8*30	B  x 12+1 Ø6*30	C 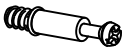 x 54+3 Ø6.5*35
D  x 54+3 Ø15*9.5	E  x 16+1 Ø4*25	F  x 12 42*20*28
G 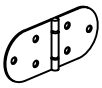 x 8 83*30	H  x 4 41.6*31*21	I 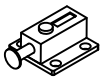 x 2 37.5*36
J  x 8 52*52*22	K 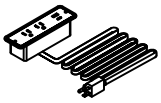 x 1	L  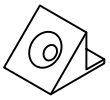 x 14+1 ϕ3*14
M 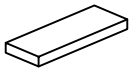 x 12+1 40*15*2	N 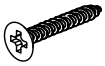 x 5+1 Ø4*25	O  x 6+1 M6*25
P  x 4+1 M6*12	Q  x 4+1 M6*35	R 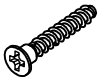 x 24+2 Ø5*40
S  x 22+2 Ø4*40	T  x 24+2 Ø4*14	U 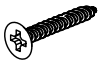 x16+1 Ø3.5*25
V  x 122+3 Ø3.5*12	W  x 2+1 Ø3*12	X  x1 4*65
Y 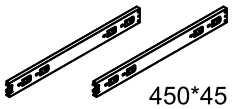 x 3set 450*45	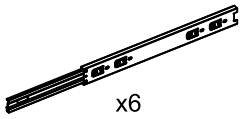 x6 + 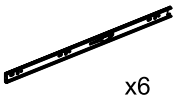 x6	
Z  x 1set	AA  x 8 200*18*9	BB  x 8+1 Ø3*14

Tools required



Phllips screwdriver
(medium & large)

Ruler - Use this ruler to help correctly identify the screws mm

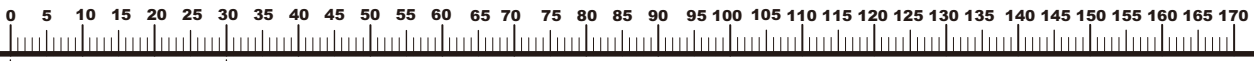



The screws length is measured from the head to the point (30mm screw shown).



inch

Cam Lock Fastening System

Insert the cam bolt into the hole first, then insert the cam lock and lock it.

1

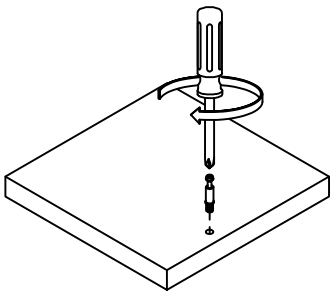

2

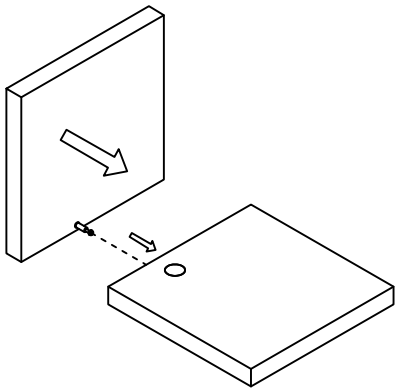

3

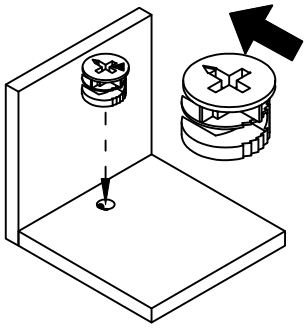

The opening must point toward the edge of the board

4

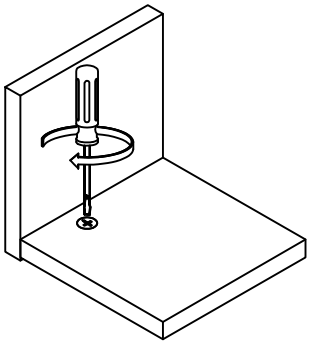

Assembly Instructions

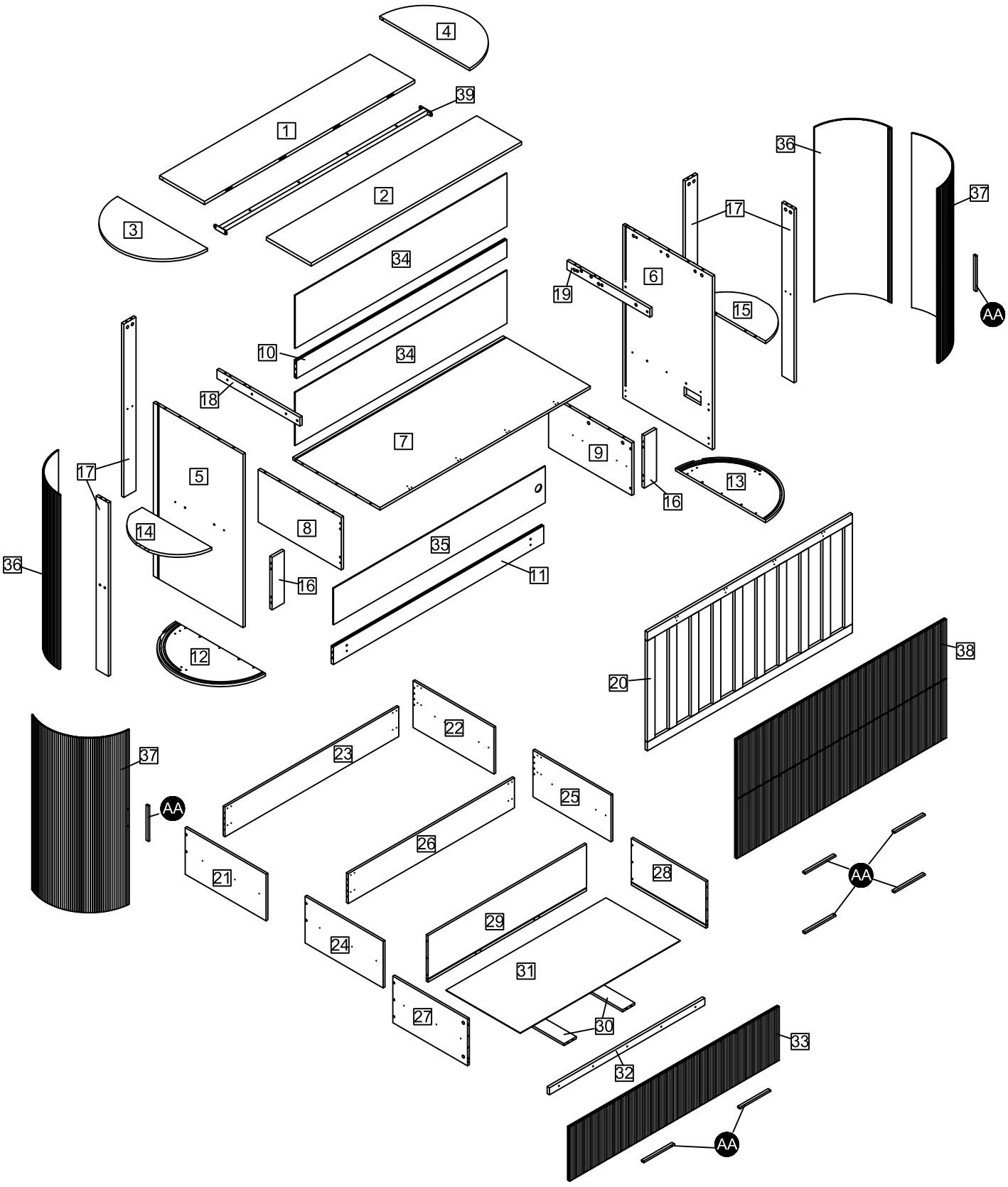

Assembly Instructions

Step 1

WARNING

How To SEPARATE BALL BEARING SLIDE.

1) Pull toward arrow to open the slide until its stops and then flip it over.

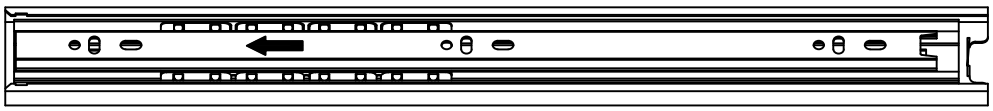

2) Push plastic lever down and pull apart.

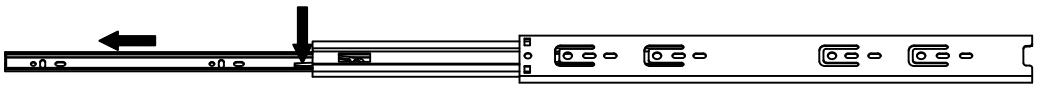

Cabinet Slide Rail

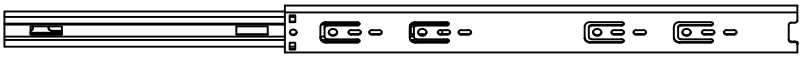

Drawer Slide Rail

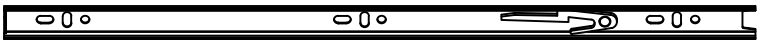

Assembly Instructions

Step 2

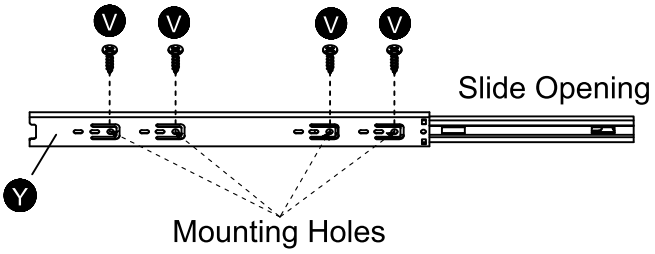

V	Ø3.5*12	x 8
Y		x 2

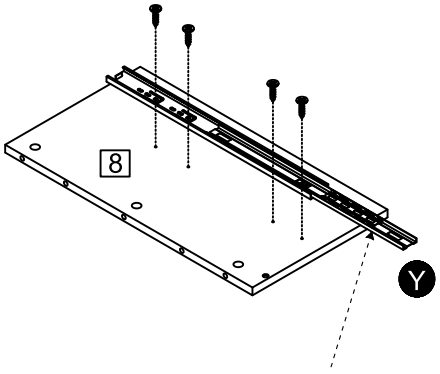

Sliding Opening faces forward

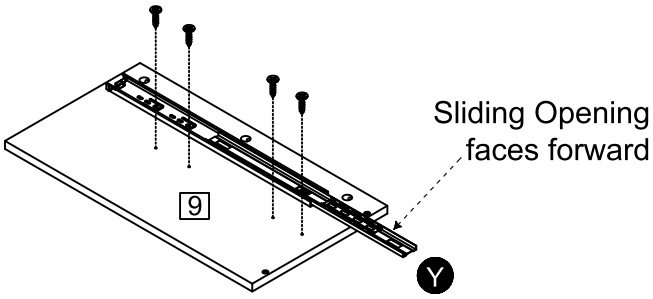

Use screws (V) to secure the drawer slide (Y) to panels (8) and (9).

Step 3

A	Ø8*30	x 4
S	Ø4*40	x 4

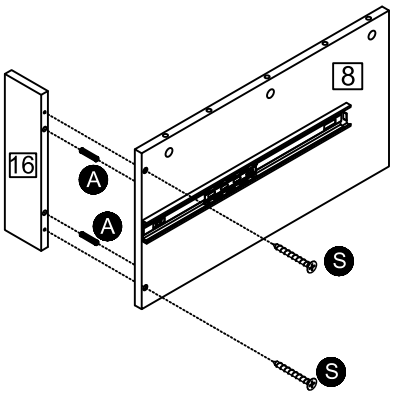

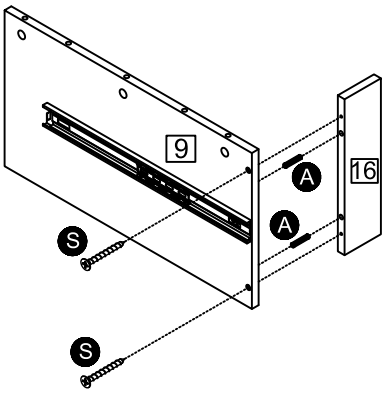

Pay attention to the installation direction of boards(8,9,16).

Insert wooden dowels (A) to connect panels (8) and (9) with panel (16), then secure with screws (S).

Assembly Instructions

Step 4

C	Ø6.5*35	x 6

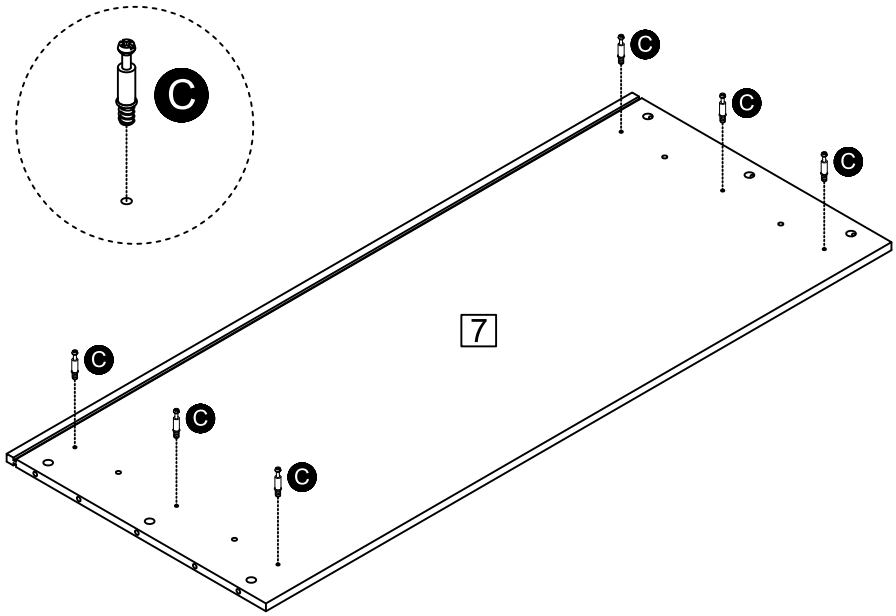

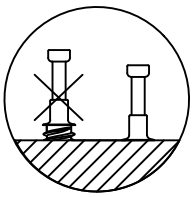

Attach hardware (C) to panel (7).

Step 5

A	Ø8*30	x 4
D	Ø15*9.5	x 6

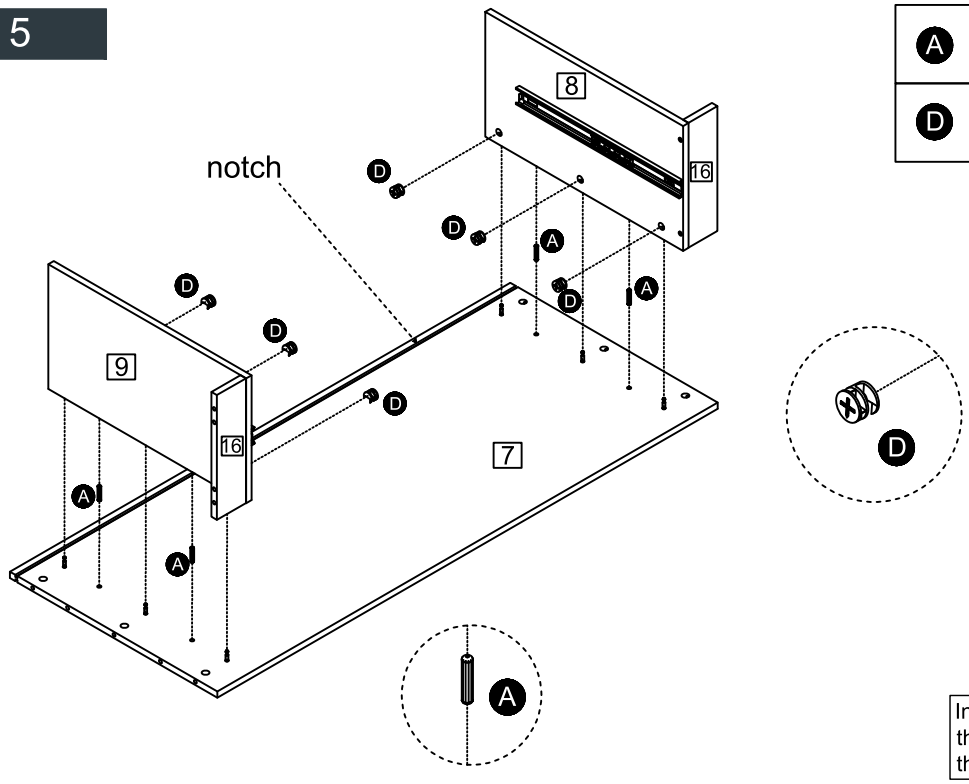

Connect panels (8) and (9) to panel (7) using wooden dowels (A), then rotate cam lock (D) clockwise to secure.

Insert the cam bolt into the hole first, then insert the cam lock and lock it.

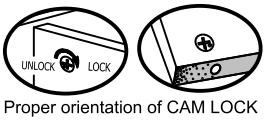

Proper orientation of CAM LOCK

Assembly Instructions

Step 6

A	Ø8*30	x 2
R	Ø5*40	x 2

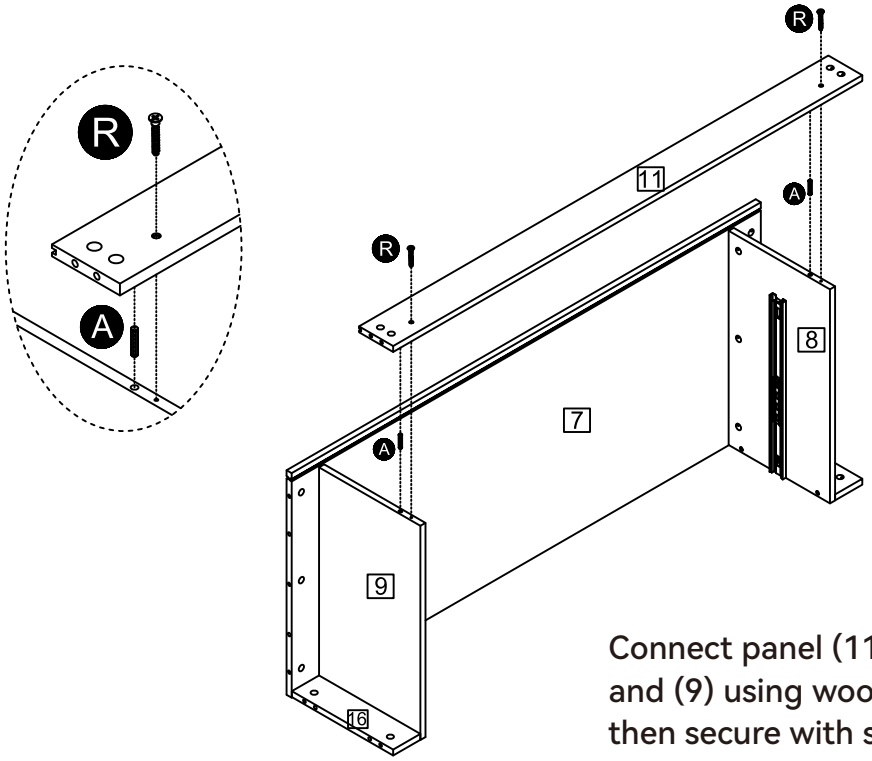

Connect panel (11) with panels (8) and (9) using wooden dowels (A), then secure with screws (R).

Step 7

C	Ø6.5*35	x 2

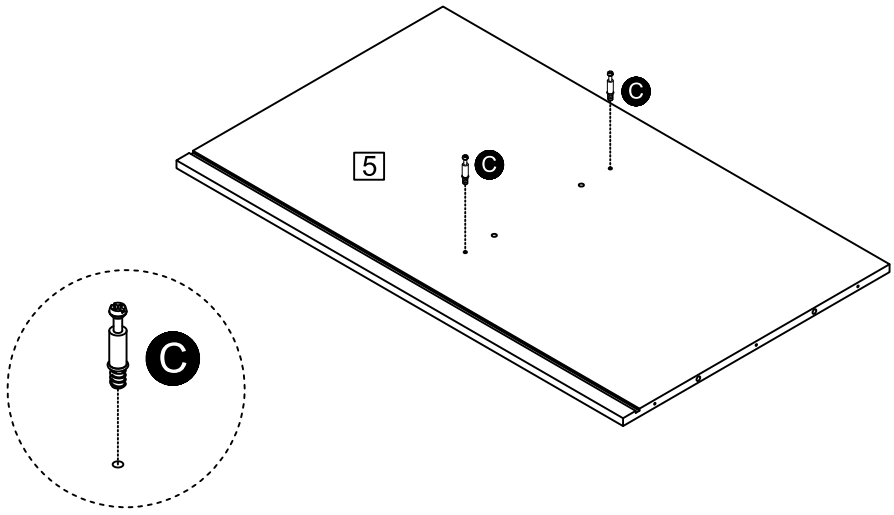

Attach hardware (C) to panel (5).

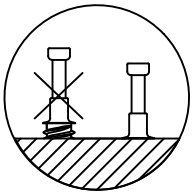

Assembly Instructions

Step 8

A	Ø8*30	x 2
D	Ø15*9.5	x 2

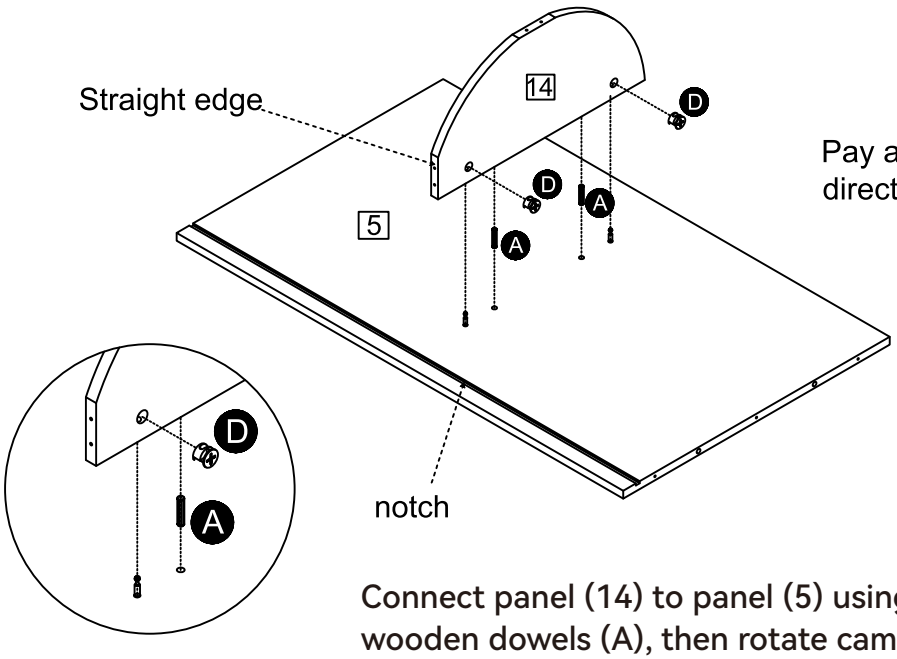

Pay attention to the installation direction of board(14).

Connect panel (14) to panel (5) using wooden dowels (A), then rotate cam lock (D) clockwise to secure.

Insert the cam bolt into the hole first, then insert the cam lock and lock it.

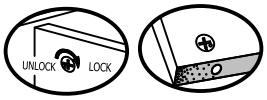

Proper orientation of CAM LOCK

Step 9

S	Ø4*40	x 2

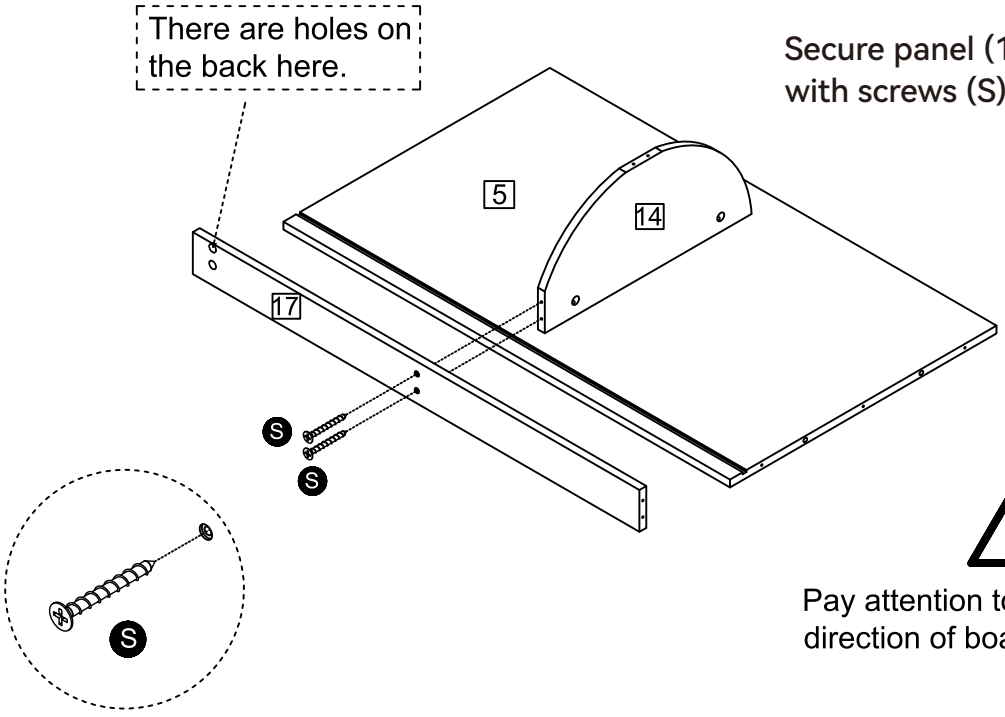

Secure panel (17) to panel (14) with screws (S) as shown.

Pay attention to the installation direction of board(17).

Assembly Instructions

Step 10

A	Ø8*30	x 2
S	Ø4*40	x 5

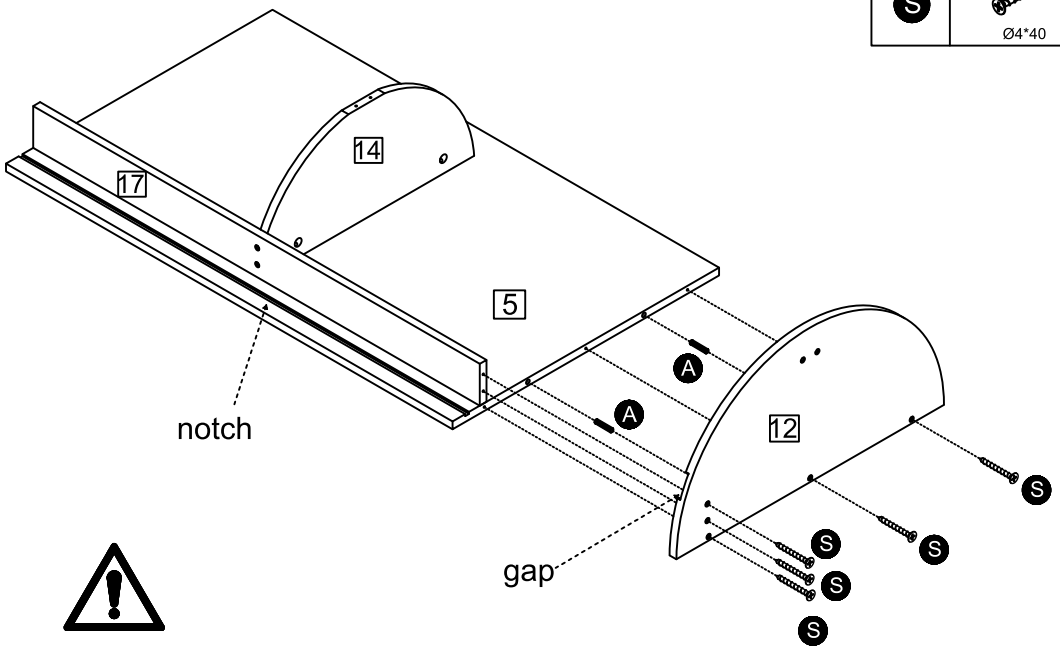

Pay attention to the installation direction of board(12).

Connect panel (12) with panels (5) and (17) using wooden dowels (A), then secure with screws (S).

Step 11

C	Ø6.5*35	x 2

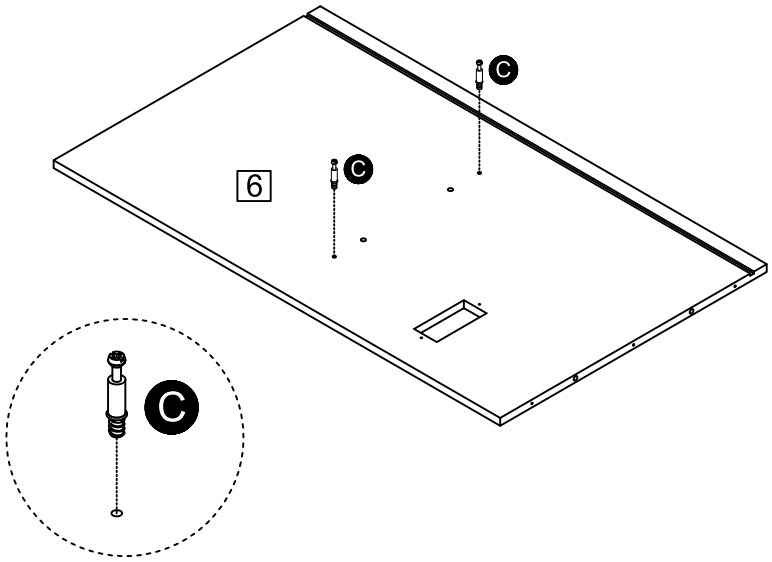

Attach hardware (C) to panel (6).

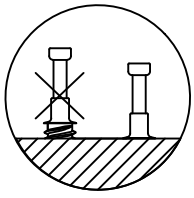

Assembly Instructions

Step 12

A	Ø8*30	x 2
D	Ø15*9.5	x 2

Pay attention to the installation direction of board(15).

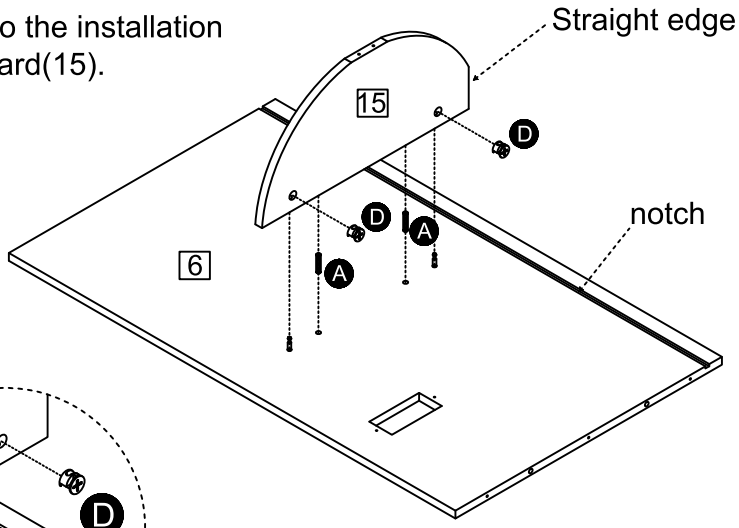

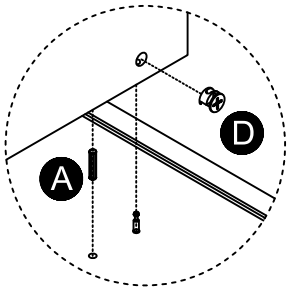

Connect panel (15) to panel (6) using wooden dowels (A), then rotate cam lock (D) clockwise to secure.

Insert the cam bolt into the hole first, then insert the cam lock and lock it.

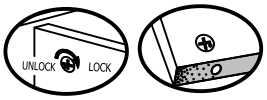

Proper orientation of CAM LOCK

Step 13

S	Ø4*40	x 2

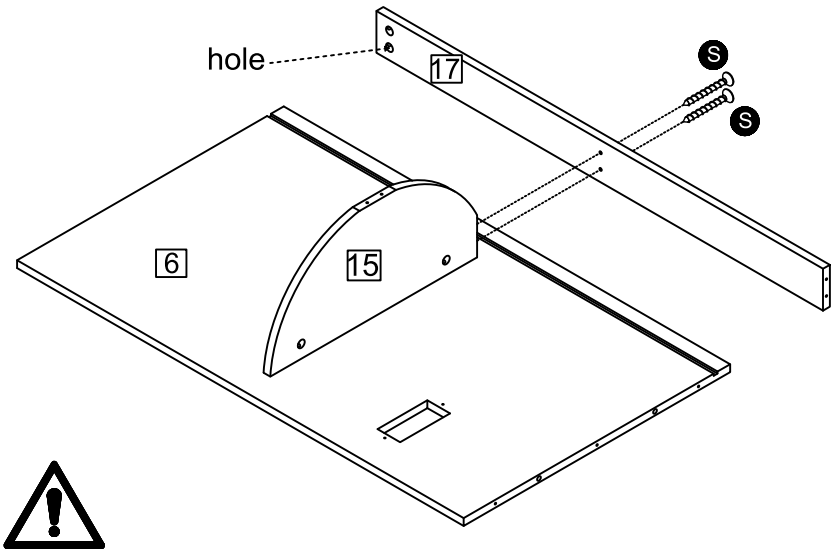

Pay attention to the installation direction of board(17).

Secure panel (17) to panel (15) with screws (S) as shown.

Assembly Instructions

Step 14

A	Ø8*30	x 2
S	Ø4*40	x 5

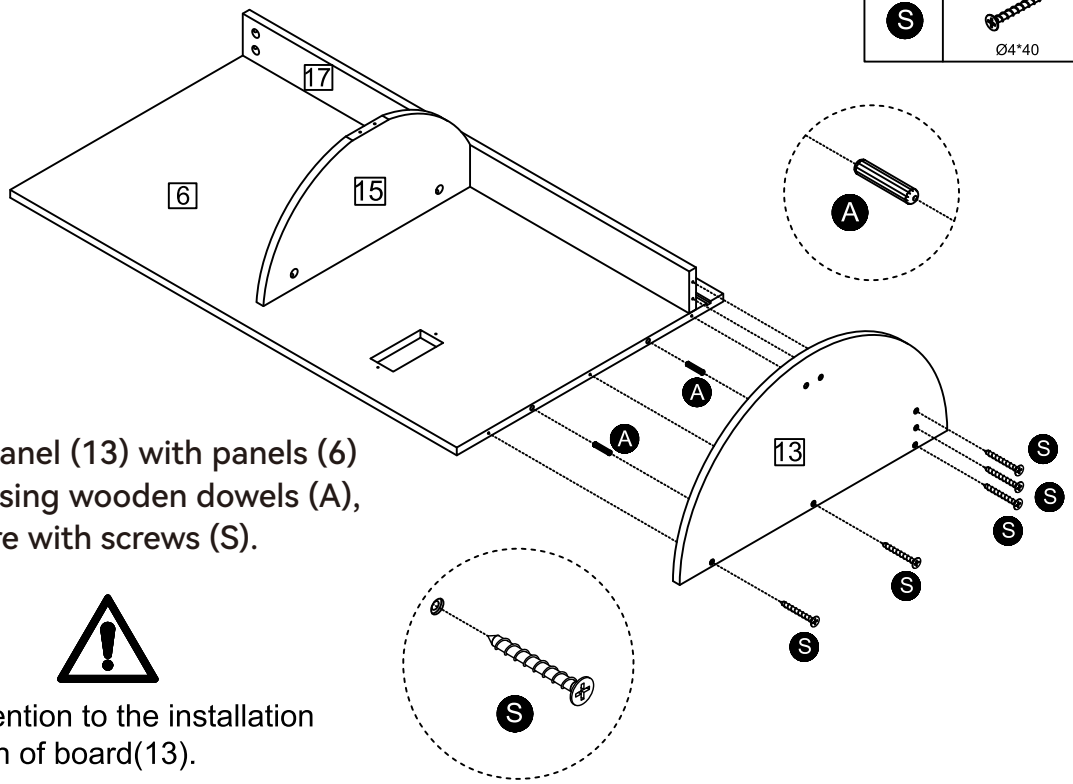

Connect panel (13) with panels (6) and (17) using wooden dowels (A), then secure with screws (S).

Pay attention to the installation direction of board(13).

Step 15

C	Ø6.5*35	x 18

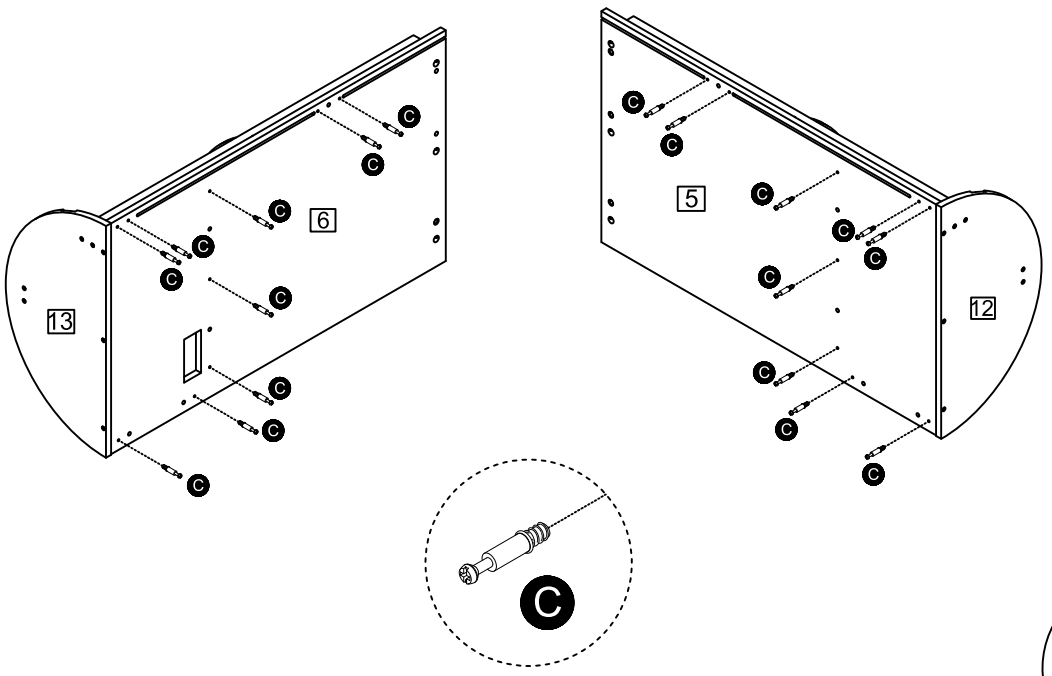

Attach hardware (C) to panels (5) and (6).

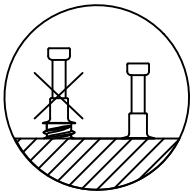

Assembly Instructions

Step 16

Connect panel (5) with panels (7), (11), and (16) using wooden dowels (A), then rotate the cam lock (D) clockwise to secure.

A	Ø8*30	x 4
D	Ø15*9.5	x 7

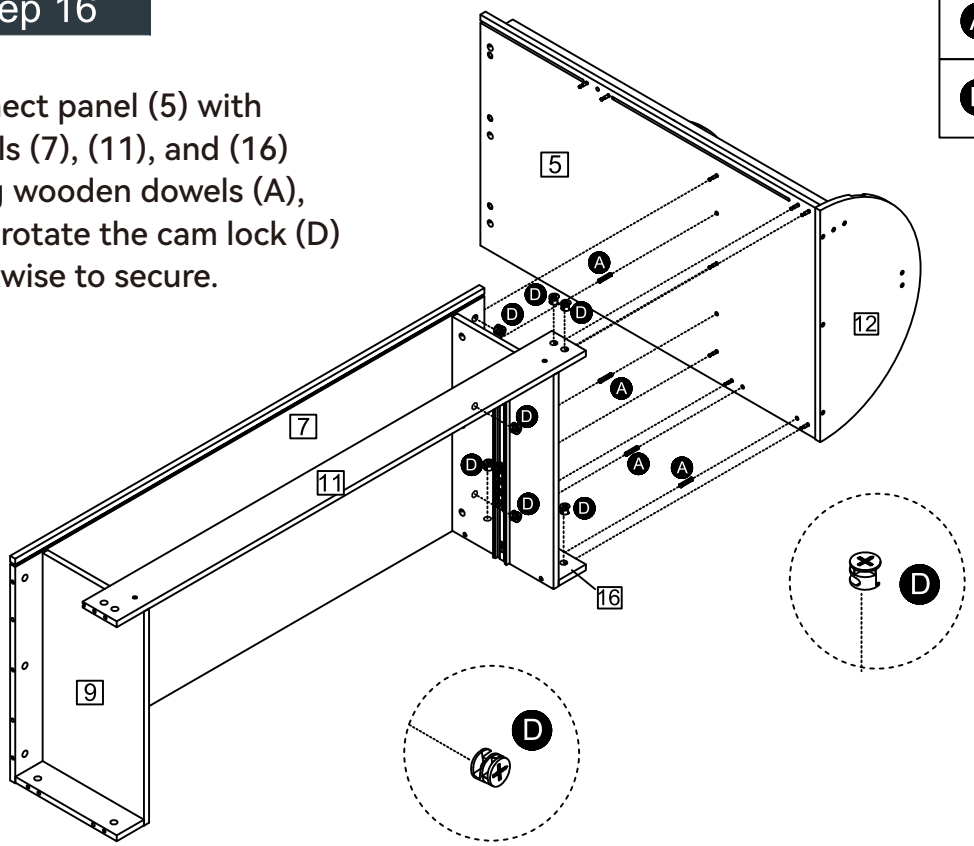

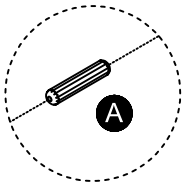

Insert the cam bolt into the hole first, then insert the cam lock and lock it.

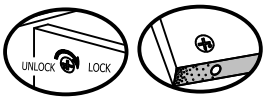

Proper orientation of CAM LOCK

Step 17

Insert panel (35) into the grooves of panels (5), (7), and (11).

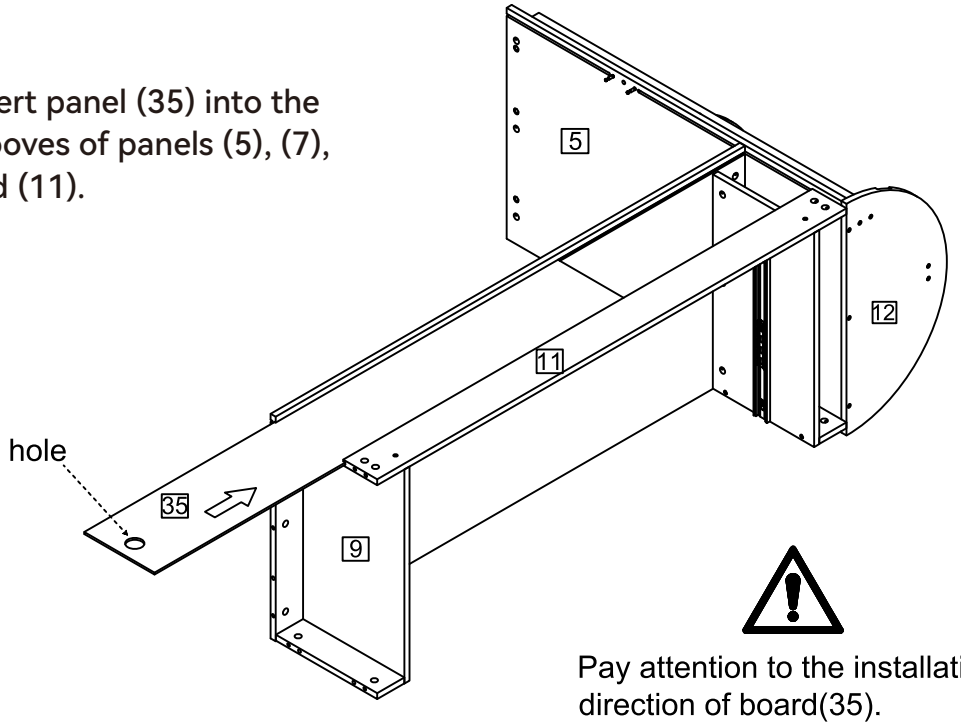

Pay attention to the installation direction of board(35).

Assembly Instructions

Step 18

One person is needed to collaborate on this assembly step.

A	Ø8*30	x 1
D	Ø15*9.5	x 2

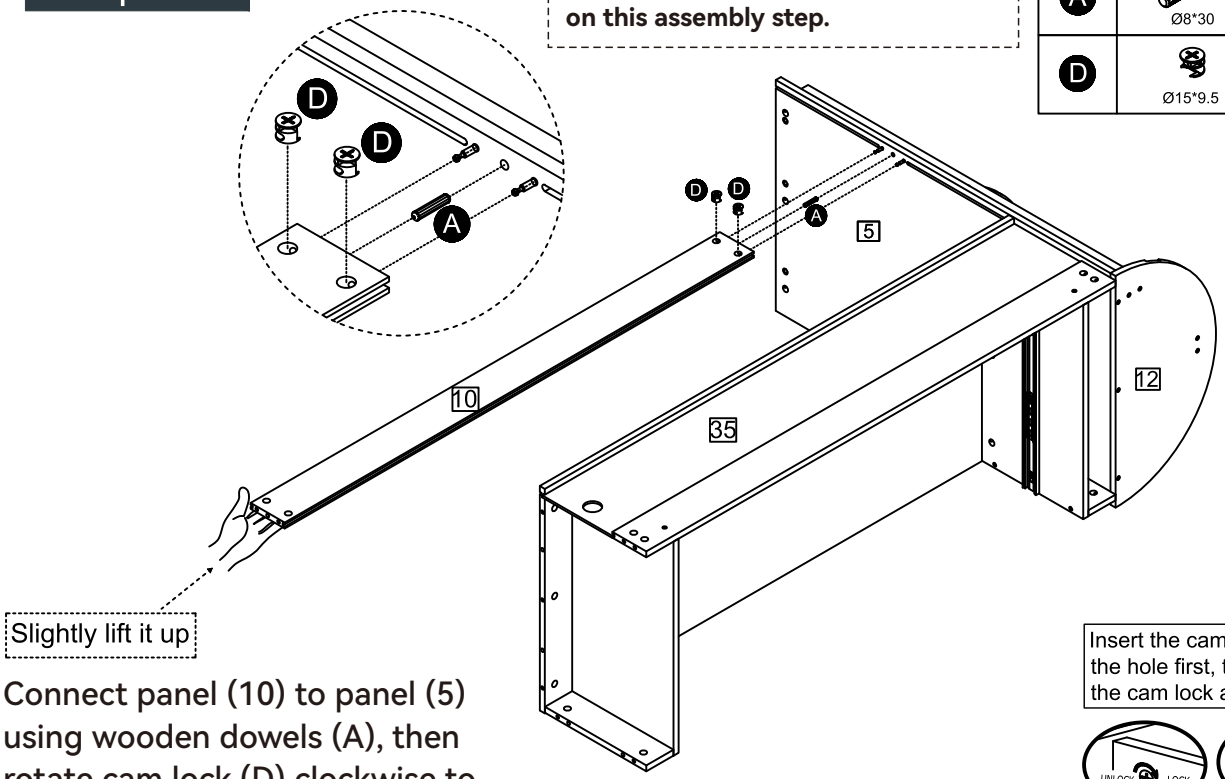

Connect panel (10) to panel (5) using wooden dowels (A), then rotate cam lock (D) clockwise to secure.

Insert the cam bolt into the hole first, then insert the cam lock and lock it.

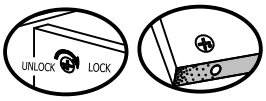

Proper orientation of CAM LOCK

Step 19

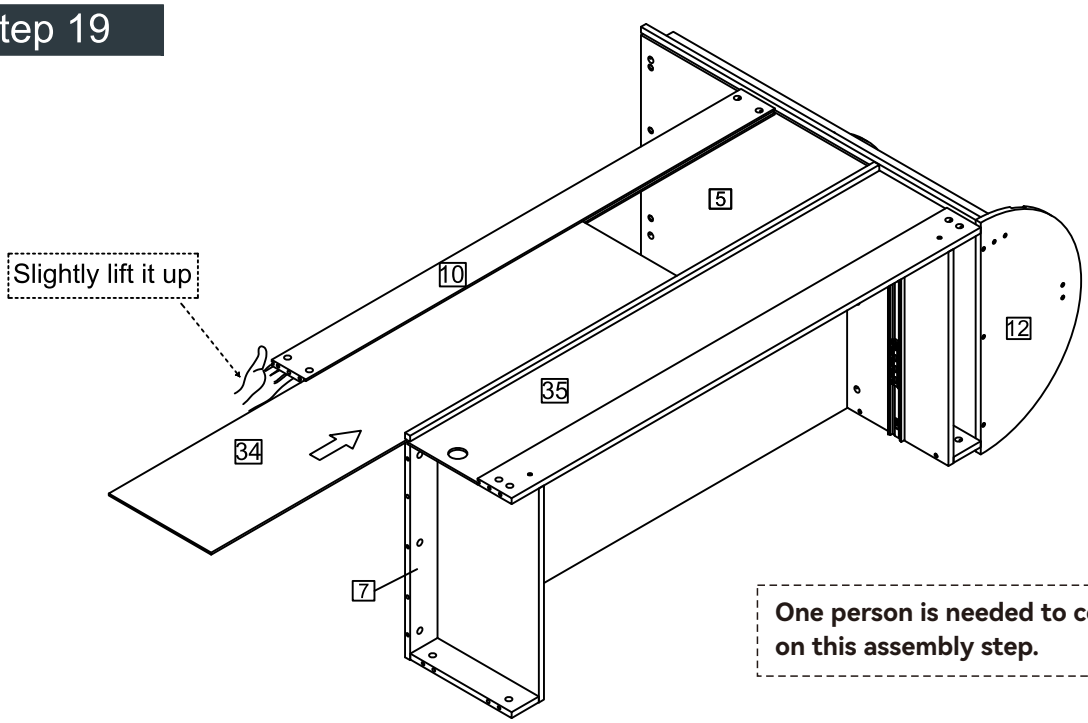

One person is needed to collaborate on this assembly step.

Insert panel (34) into the grooves of panels (5), (7), and (10).

Assembly Instructions

Step 20

A	Ø8*30	x 5
D	Ø15*9.5	x 9

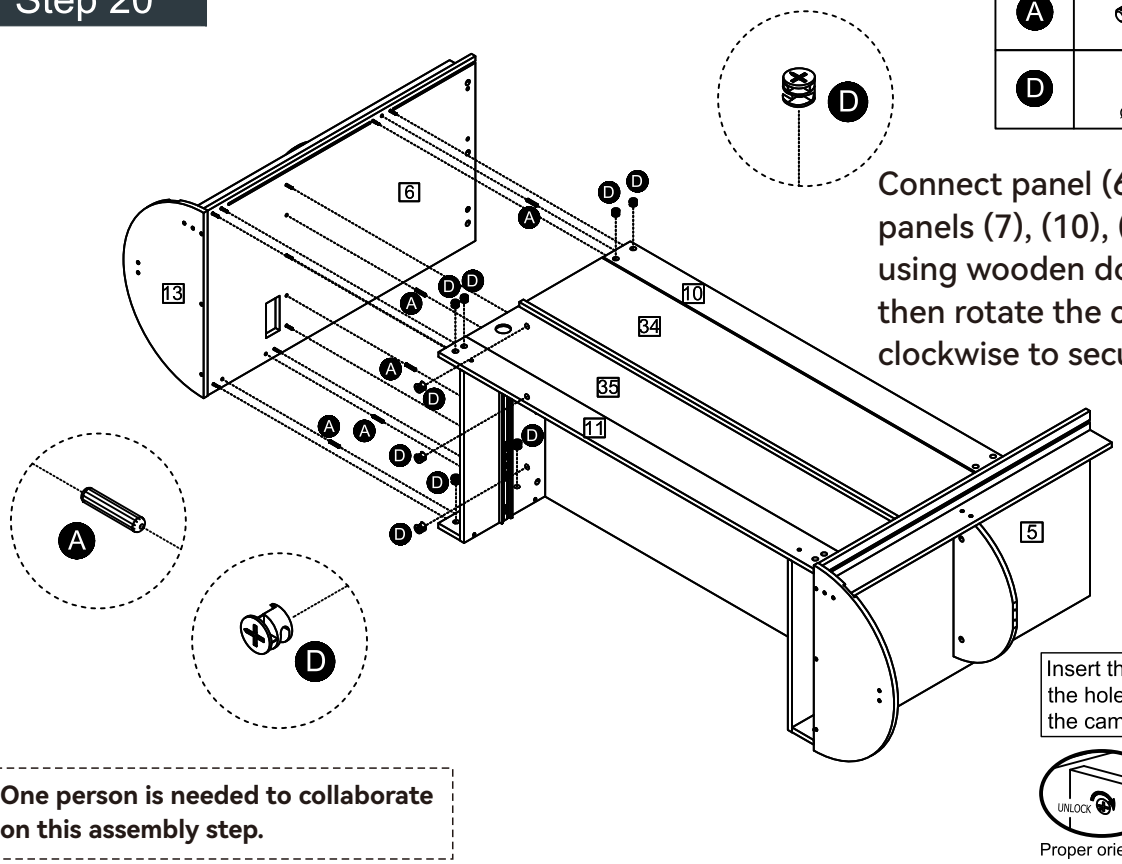

Connect panel (6) with panels (7), (10), (11), and (16) using wooden dowels (A), then rotate the cam lock (D) clockwise to secure.

Insert the cam bolt into the hole first, then insert the cam lock and lock it.

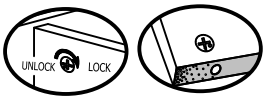

Proper orientation of CAM LOCK

One person is needed to collaborate on this assembly step.

Step 21

W	Ø3*12	x 2
K		x 1

The USB plug comes out of the back plate hole.

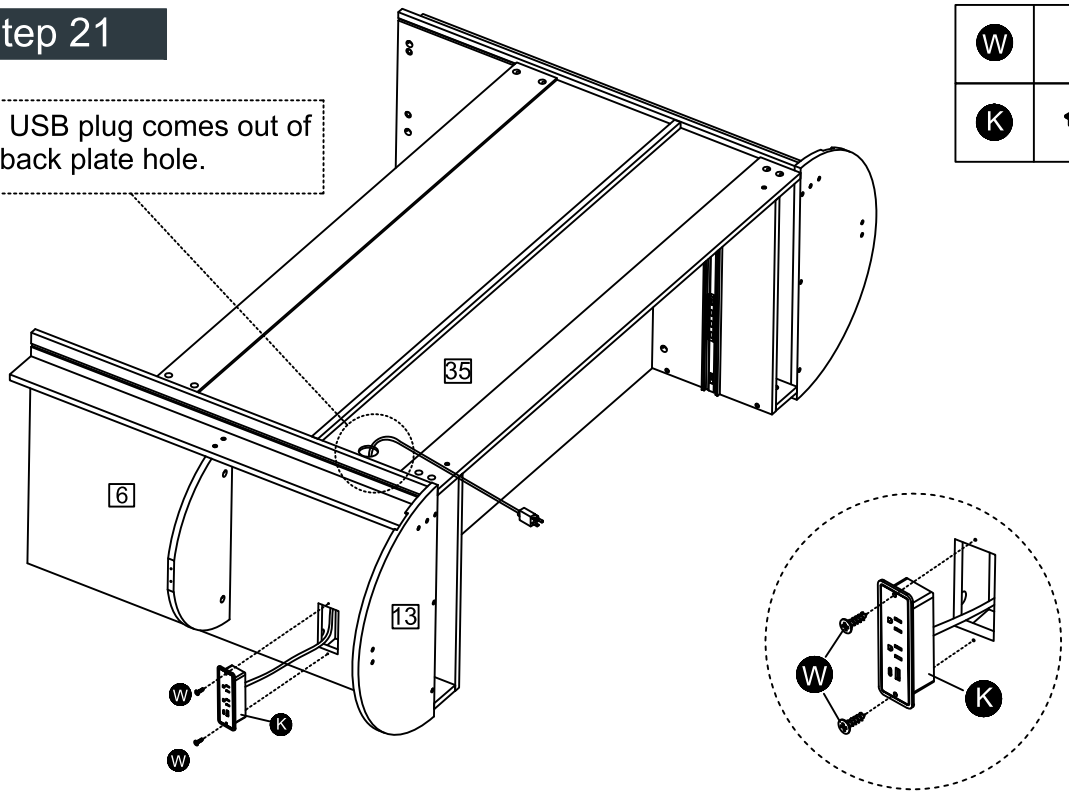

Use screws (W) to secure hardware (K) to panel (6), and pass the plug of hardware (K) through the round hole on panel (35).

Assembly Instructions

Step 22

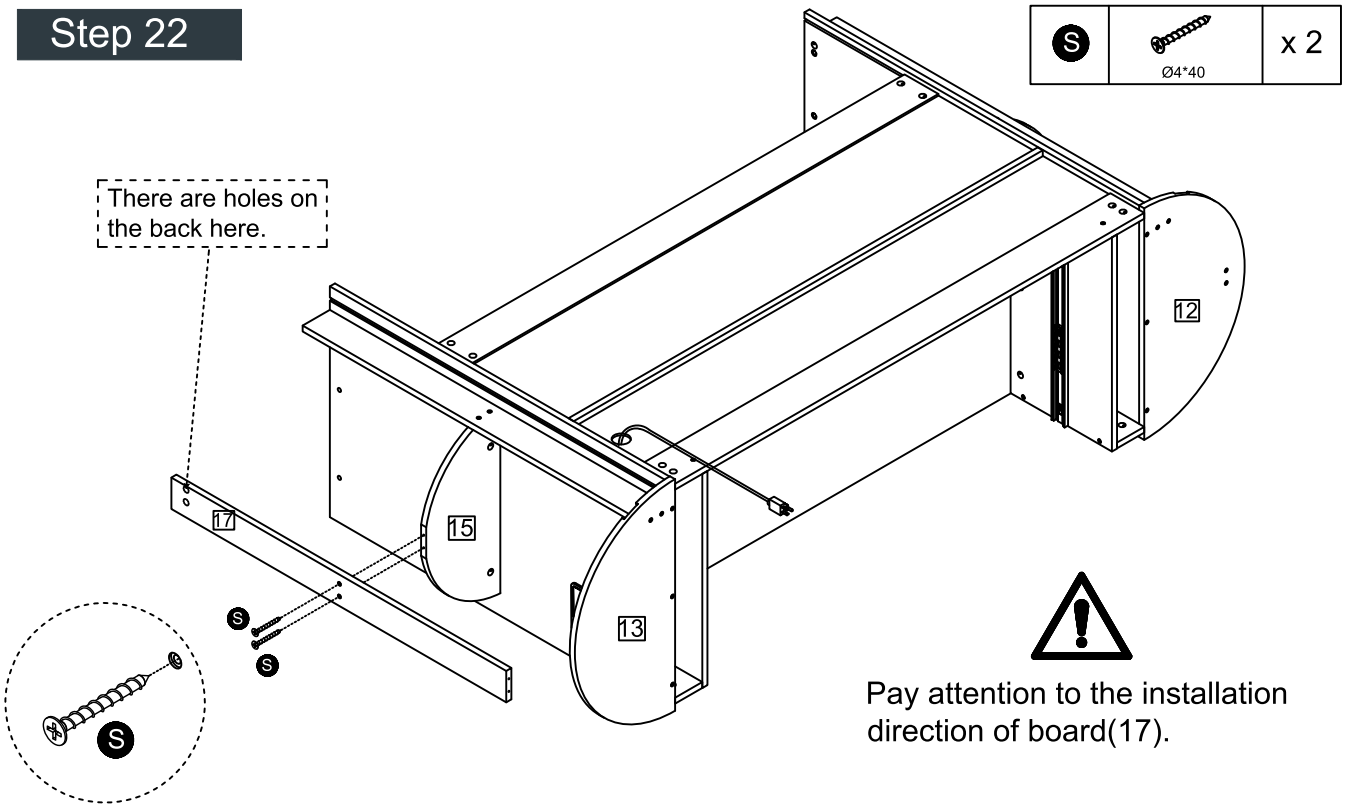

Pay attention to the installation direction of board(17).

Secure panel (17) to panel (15) with screws (S) as shown.

Step 23

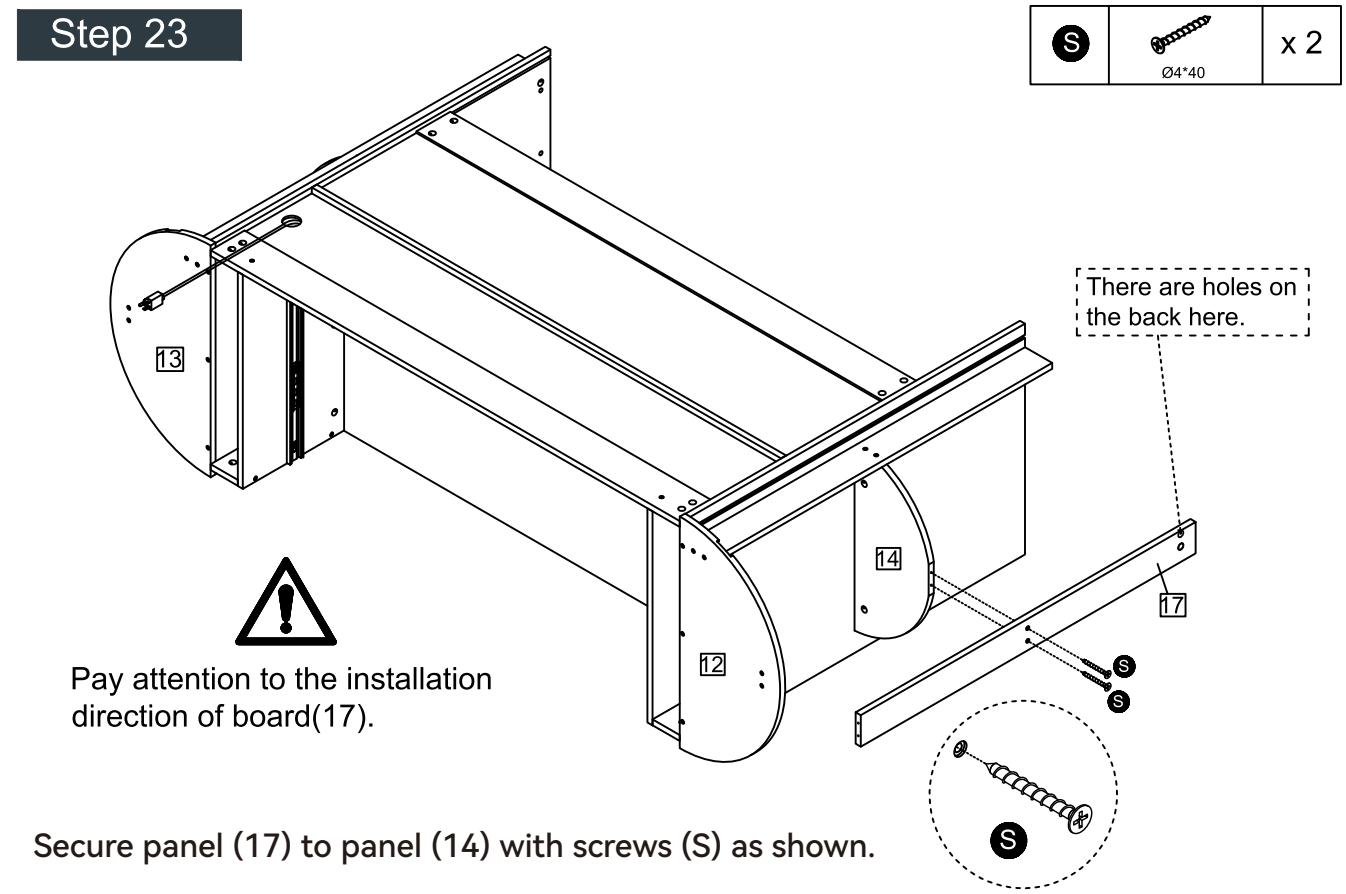

Pay attention to the installation direction of board(17).

Secure panel (17) to panel (14) with screws (S) as shown.

Assembly Instructions

Step 24

S	Ø4*40	x 4

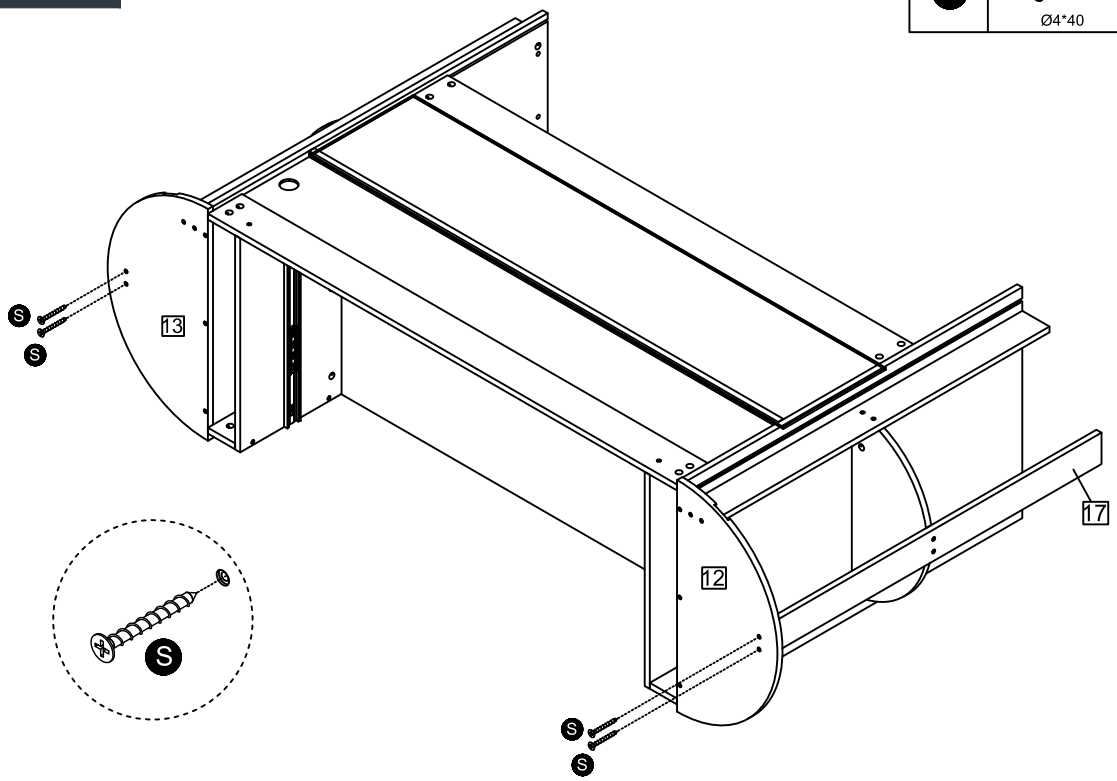

Secure panel (17) to panels (12) and (13) using screws (S).

Step 25

One person is needed to collaborate on this assembly step.

A	Ø8*30	x 4

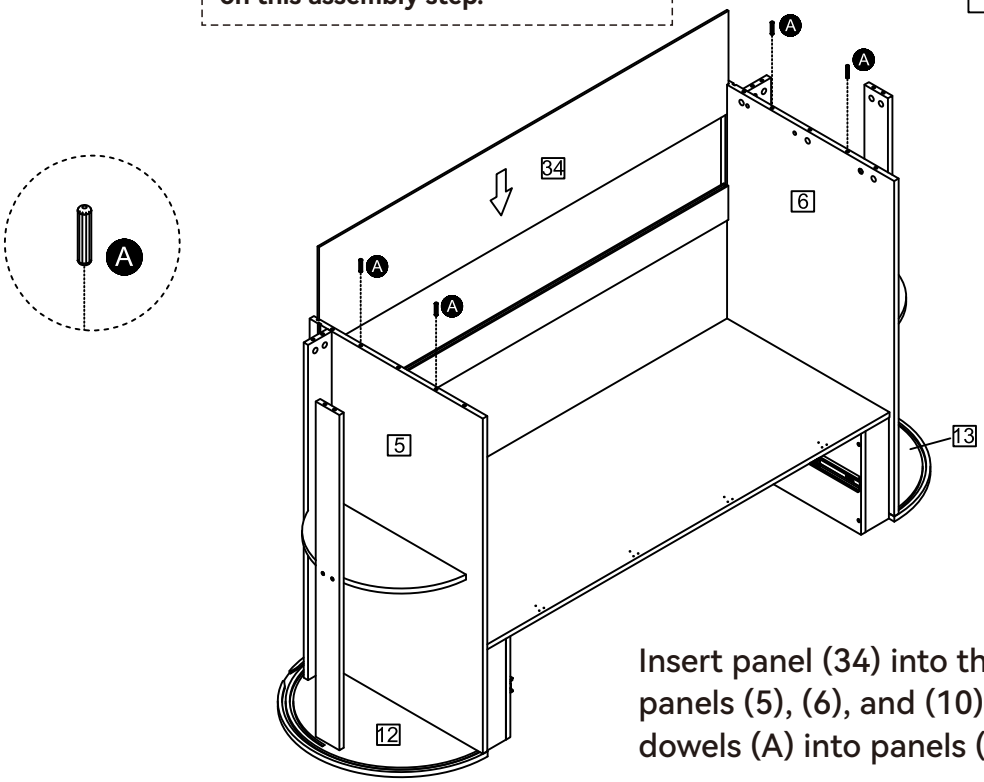

Insert panel (34) into the grooves of panels (5), (6), and (10). Install wooden dowels (A) into panels (5) and (6).

Assembly Instructions

Step 26

C	Ø6.5*35	x 7

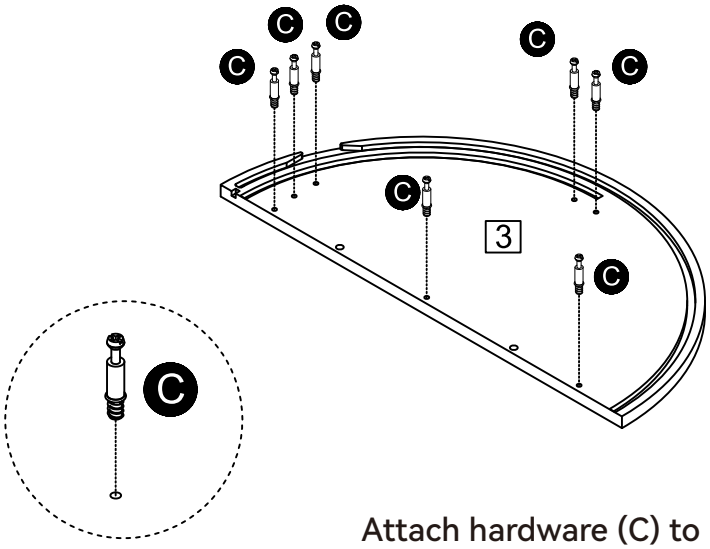

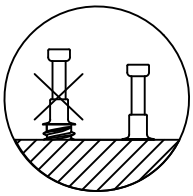

Attach hardware (C) to panel (3).

Step 27

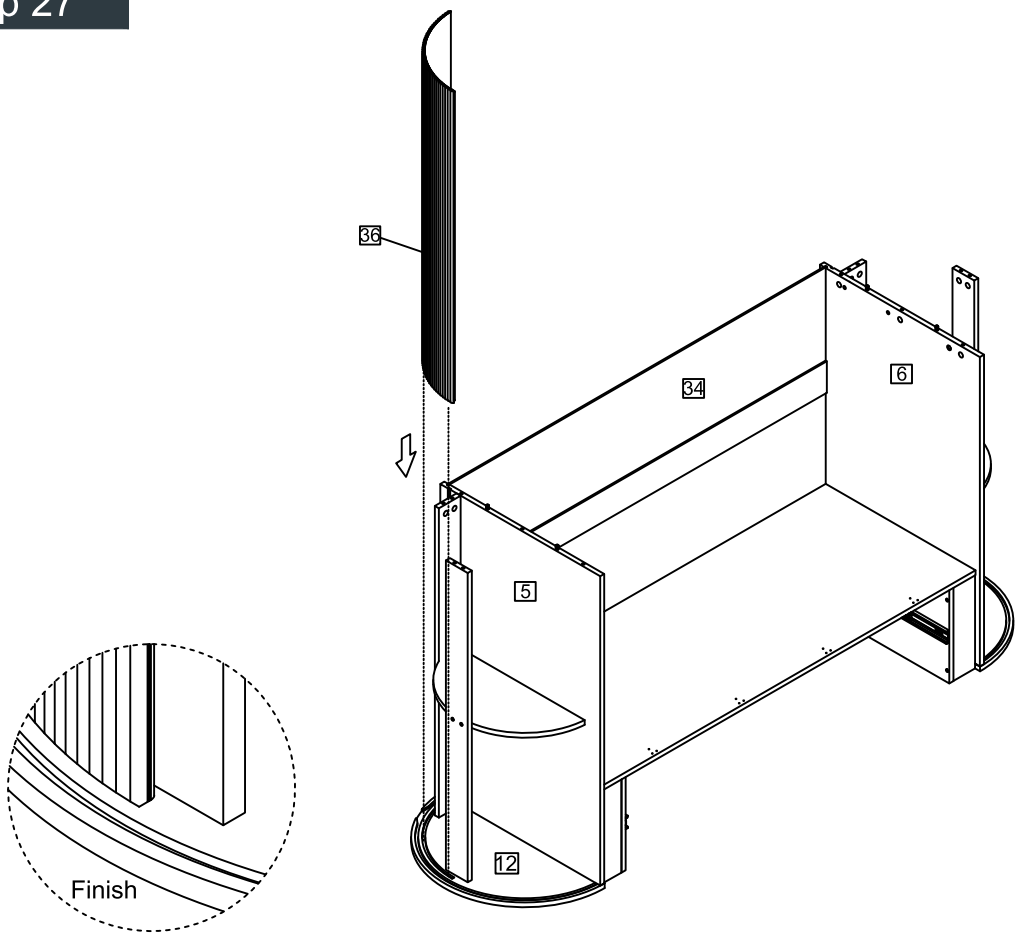

Insert panel (36) into the grooves of panels (5) and (12).

Assembly Instructions

Step 28

One person is needed to collaborate on this assembly step.

D	Ø15*9.5	x 7

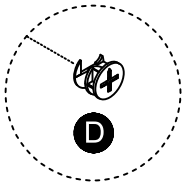

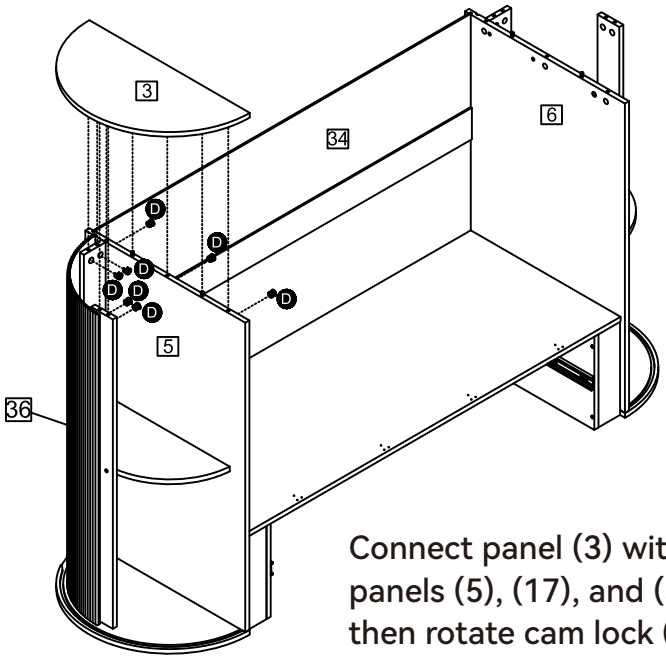

Connect panel (3) with panels (5), (17), and (36), then rotate cam lock (D) clockwise to secure.

Insert the cam bolt into the hole first, then insert the cam lock and lock it.

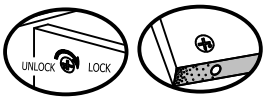

Proper orientation of CAM LOCK

Step 29

C	Ø6.5*35	x 7

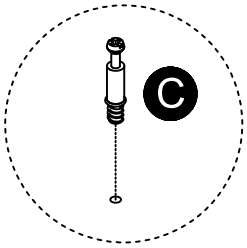

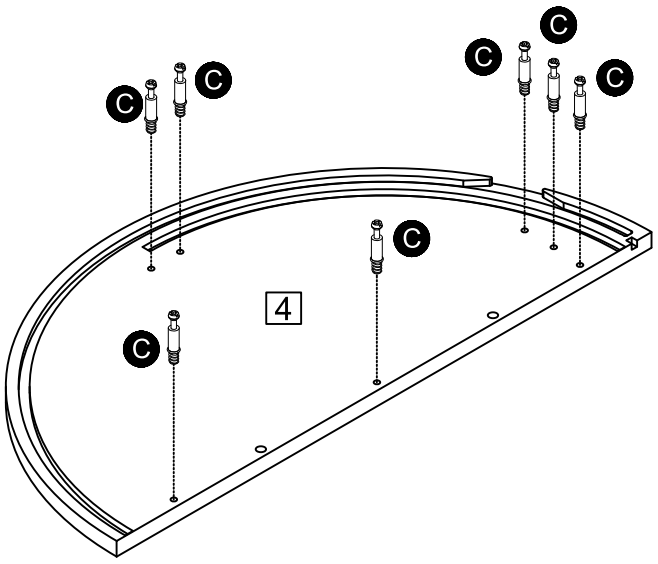

Attach hardware (C) to panel (4).

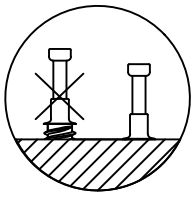

Assembly Instructions

Step 30

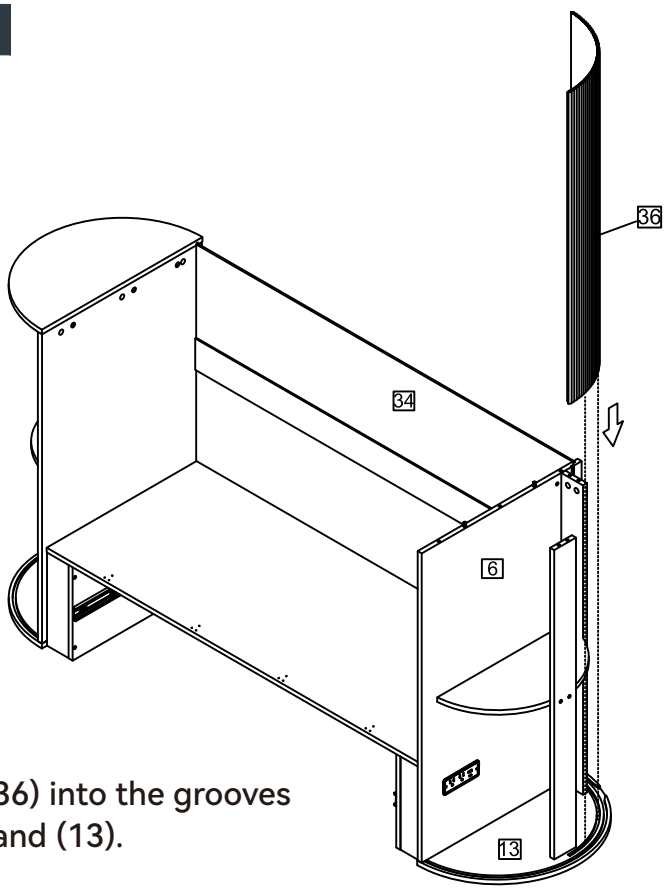

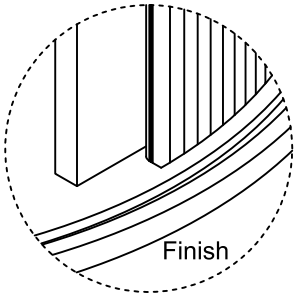

Insert panel (36) into the grooves of panels (6) and (13).

Step 31

One person is needed to collaborate on this assembly step.

D	Ø15*9.5	x 7

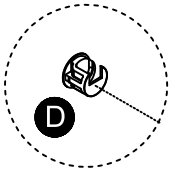

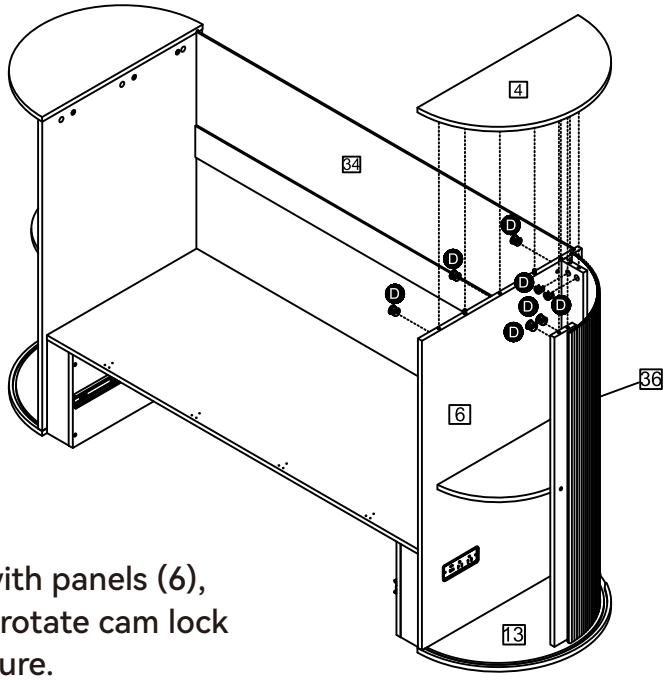

Connect panel (4) with panels (6), (17), and (36), then rotate cam lock (D) clockwise to secure.

Insert the cam bolt into the hole first, then insert the cam lock and lock it.

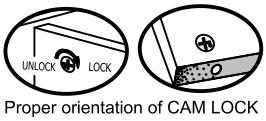

Proper orientation of CAM LOCK

Assembly Instructions

Step 32

Q	M6*35	x 4
X	4*65	x 1

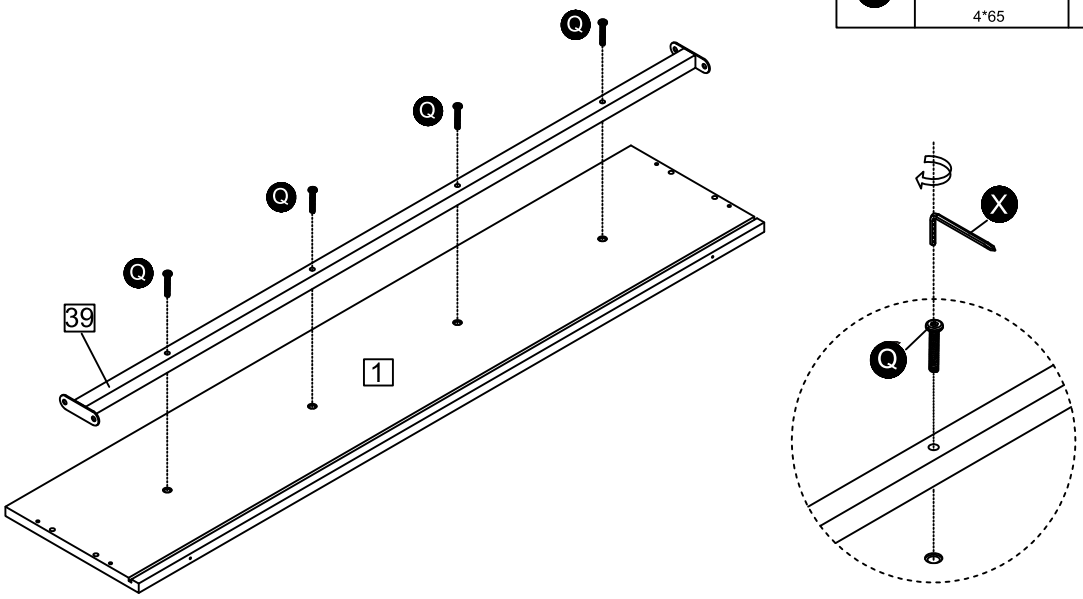

Attach metal part (39) to panel (1) with screws (Q),
then tighten it clockwise with wrench (X).

Step 33

C	Ø6.5*35	x 4

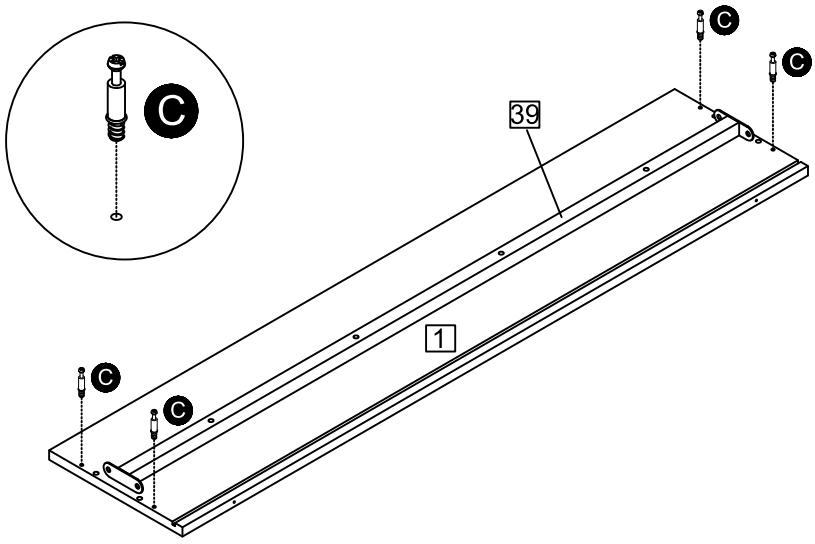

Attach hardware (C) to panel (1).

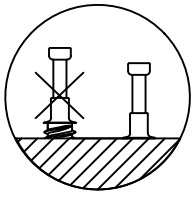

Assembly Instructions

Step 34

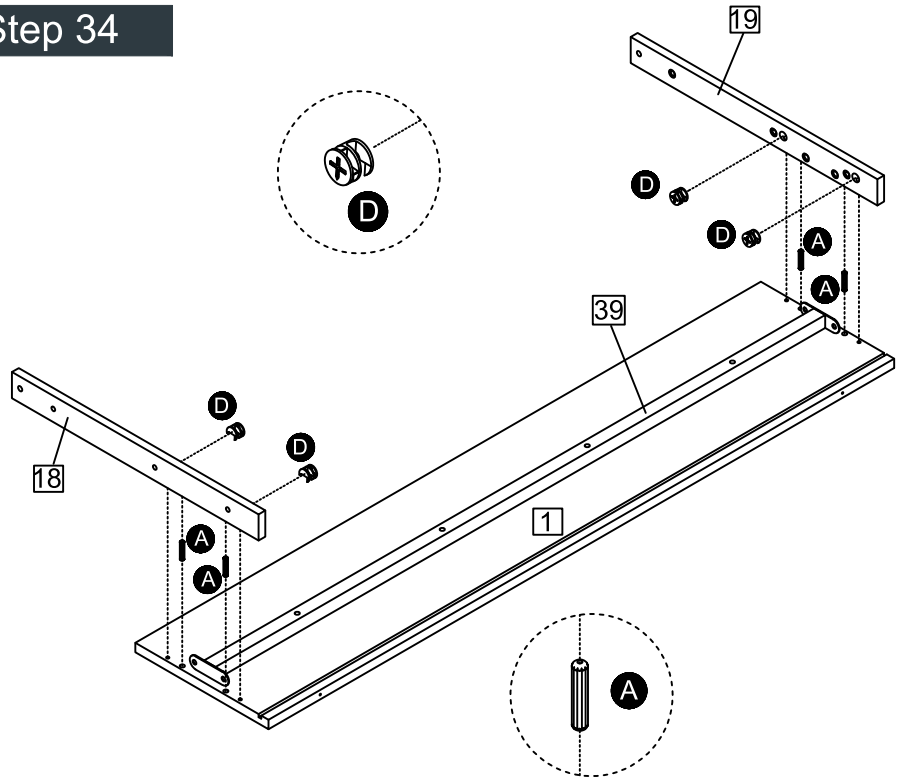

A	Ø8*30	x 4
D	Ø15*9.5	x 4

Insert the cam bolt into the hole first, then insert the cam lock and lock it.

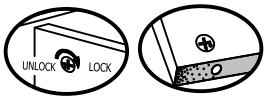

Proper orientation of CAM LOCK

Connect panels (18) and (19) to panel (1) using wooden dowels (A), then rotate cam lock (D) clockwise to secure.

Step 35

P	M6*12	x 4
X	4*65	x 1

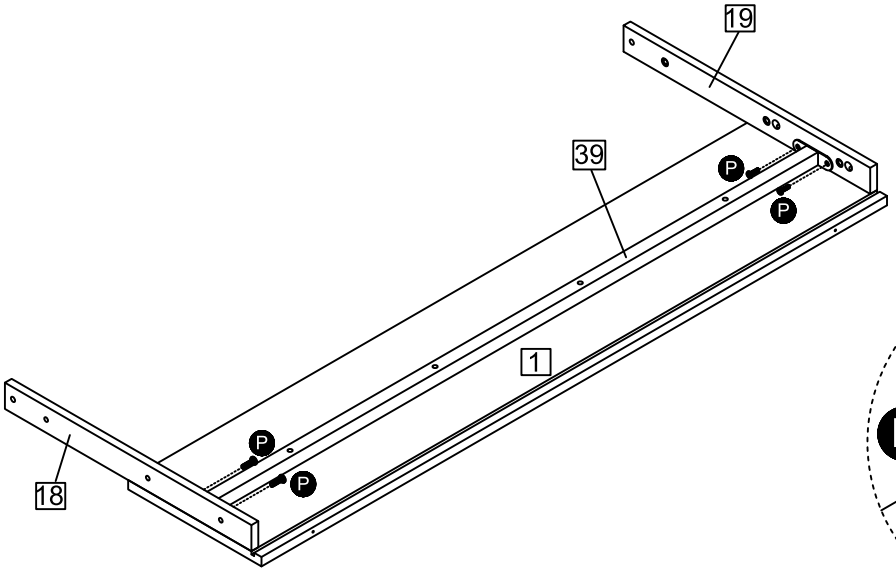

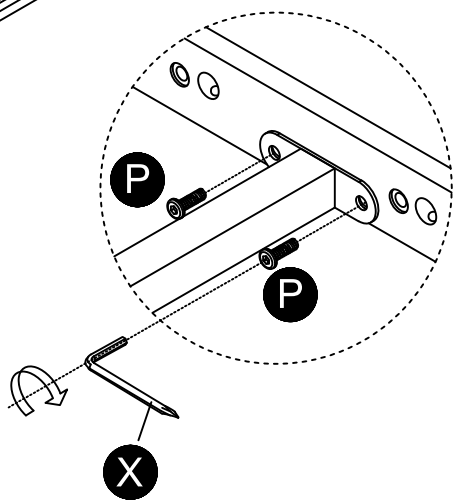

Attach metal part (39) to panels (18) and (19) with screws (P), then tighten it clockwise with wrench (X).

Assembly Instructions

Step 36

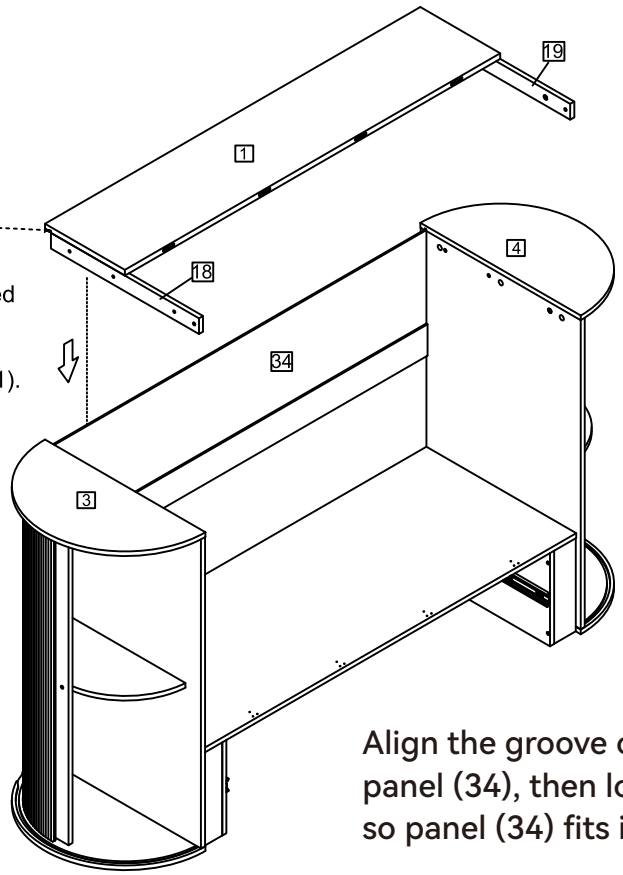

The notch of board (1) is aligned with the vertical placement of board (34), and board (34) is inserted into the slot of board (1).

Align the groove of panel (1) with panel (34), then lower it vertically so panel (34) fits into the groove.

Step 37

O	 M6*25	x 6
X	 4*65	x 1

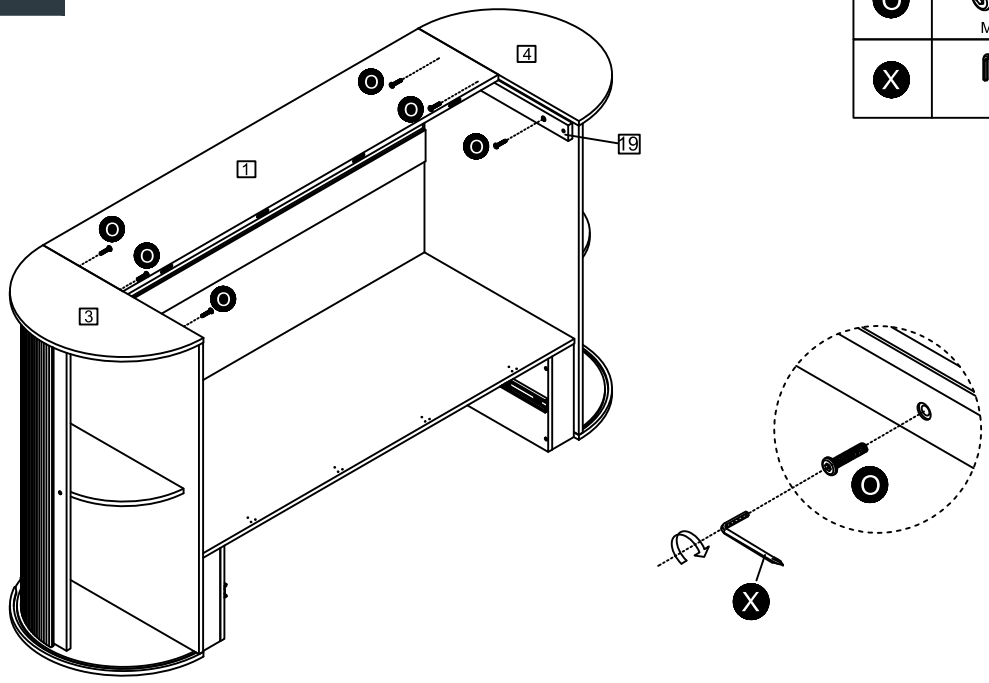

Use screws (O) to connect panel (18) to panel (5) and panel (19) to panel (6), then tighten using wrench (X).

Assembly Instructions

Step 38

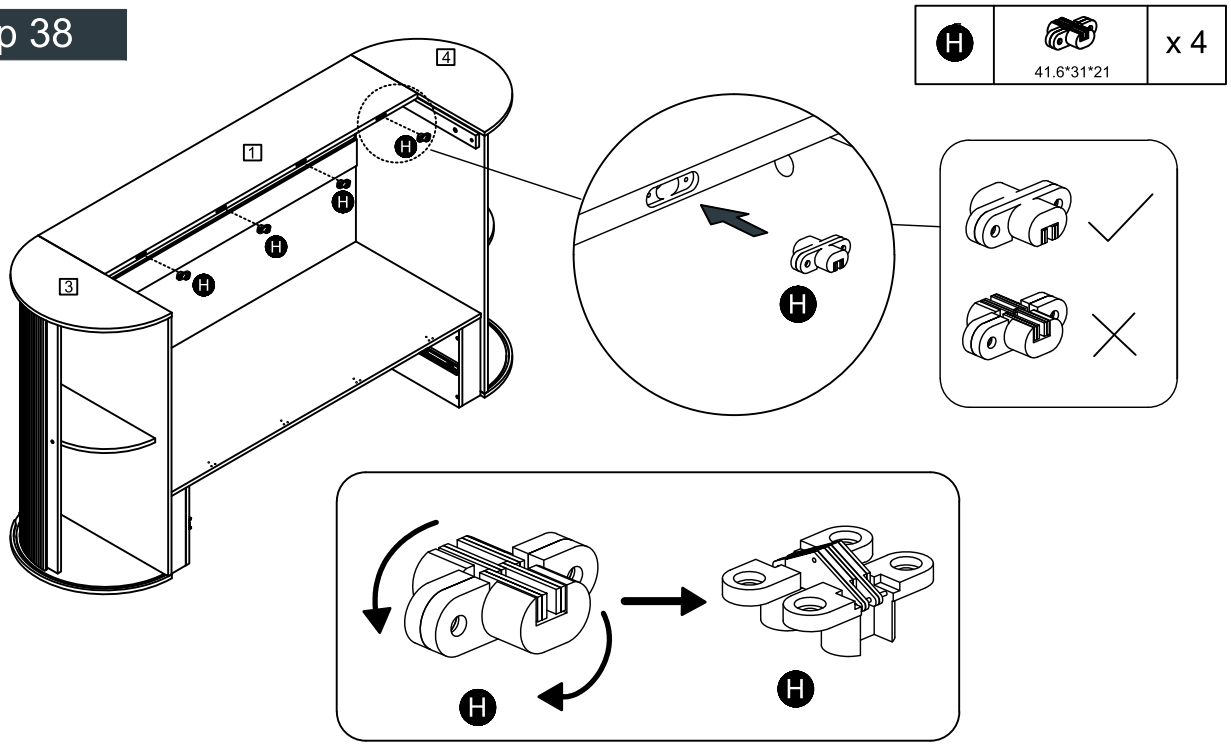

Insert hardware (H) into the hole of panel (1) in the correct direction as shown.

Step 39

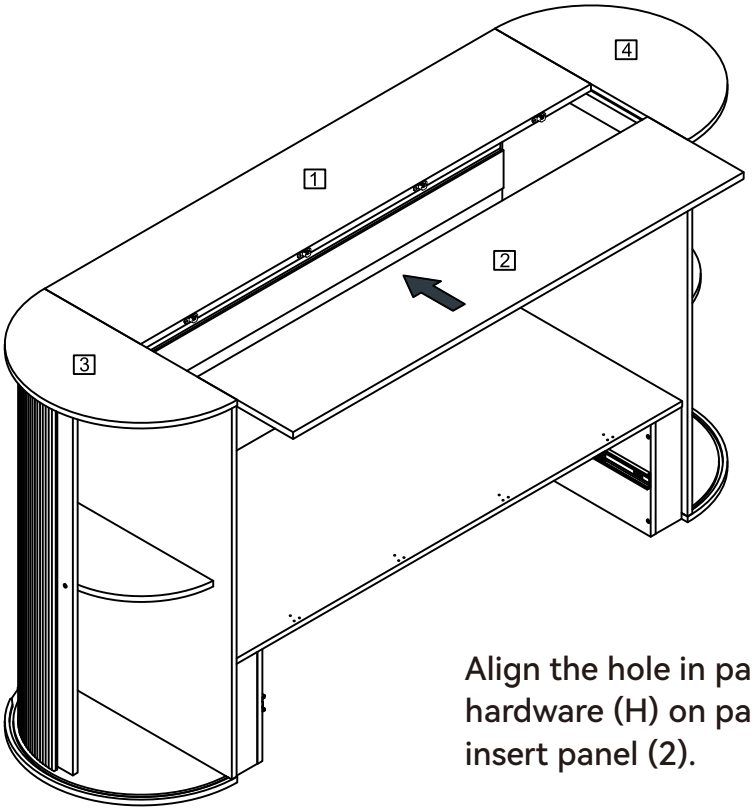

Align the hole in panel (2) with hardware (H) on panel (1), then insert panel (2).

Assembly Instructions

Step 40

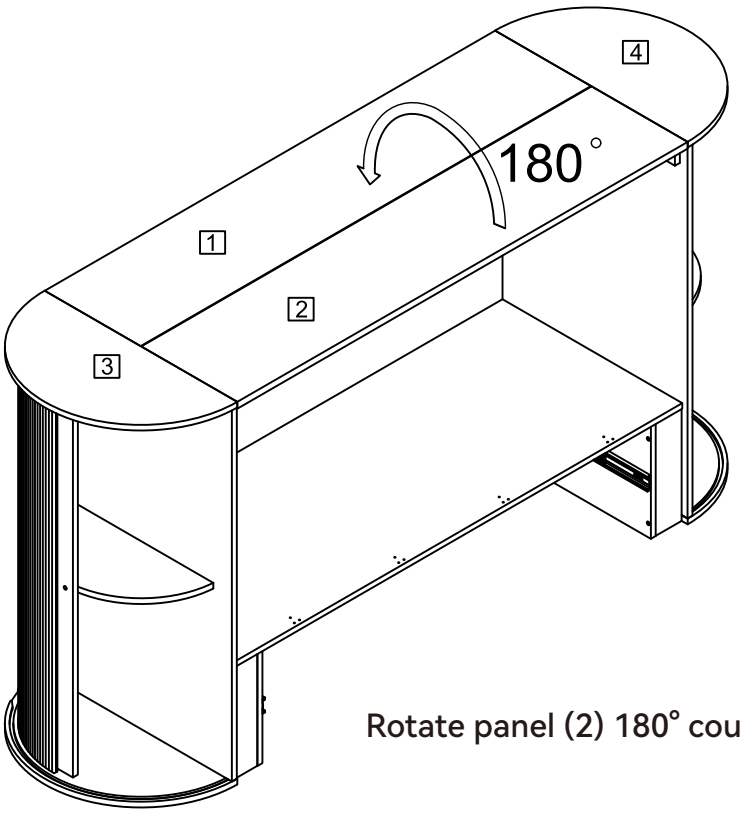

Rotate panel (2) 180° counterclockwise.

Step 41

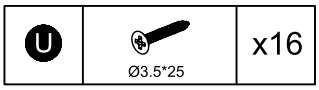

Secure hardware (H) to panels (1) and (2) using screws (U).

Assembly Instructions

Step 42

E	Ø4*25	x 4
AA	200*18*9	x 2

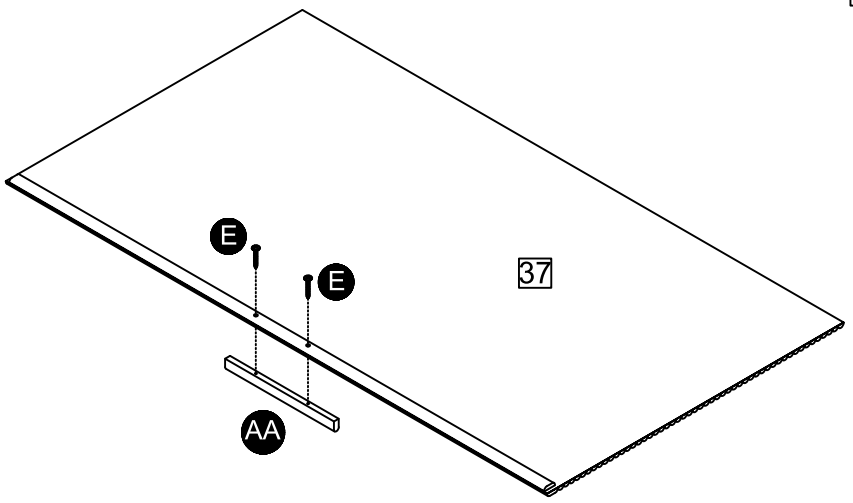

X2

Attach handle (AA) to panel (37) using screws (E). Repeat twice.

Step 43

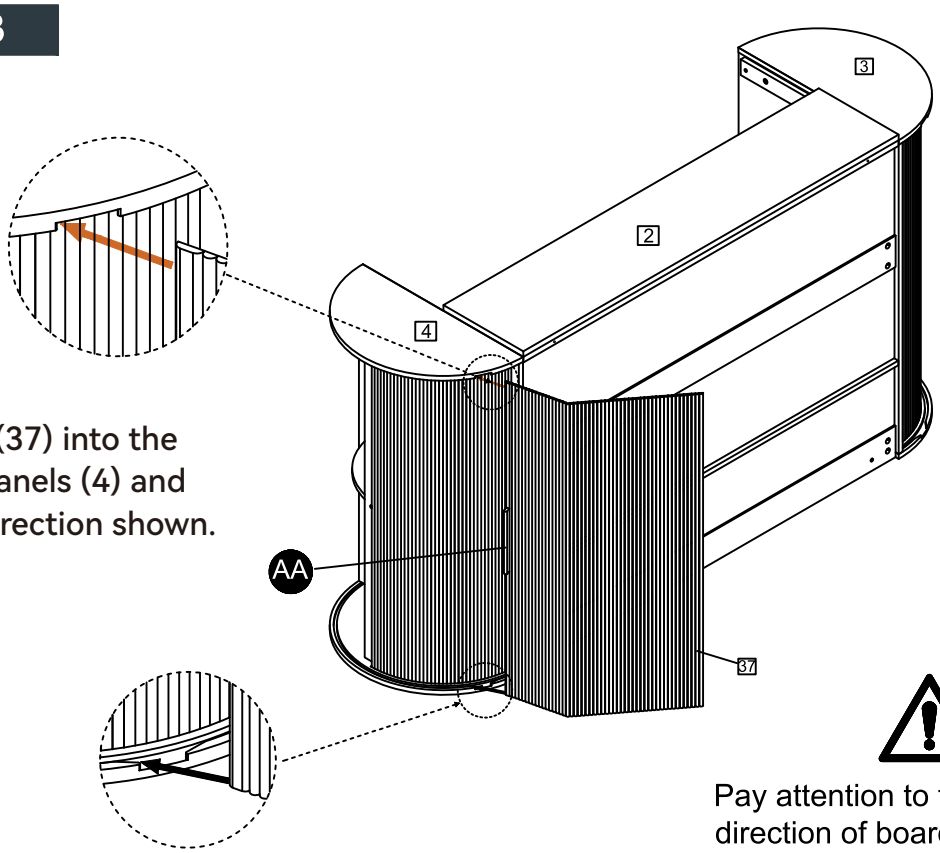

Insert panel (37) into the grooves of panels (4) and (13) in the direction shown.

Pay attention to the installation direction of board(37).

Assembly Instructions

Step 44

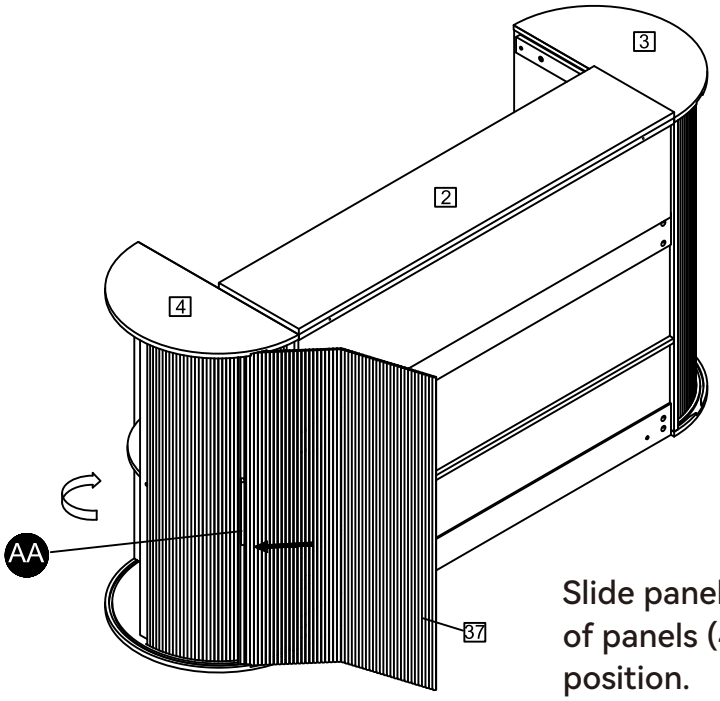

Slide panel (37) along the grooves of panels (4) and (13) to the correct position.

Step 45

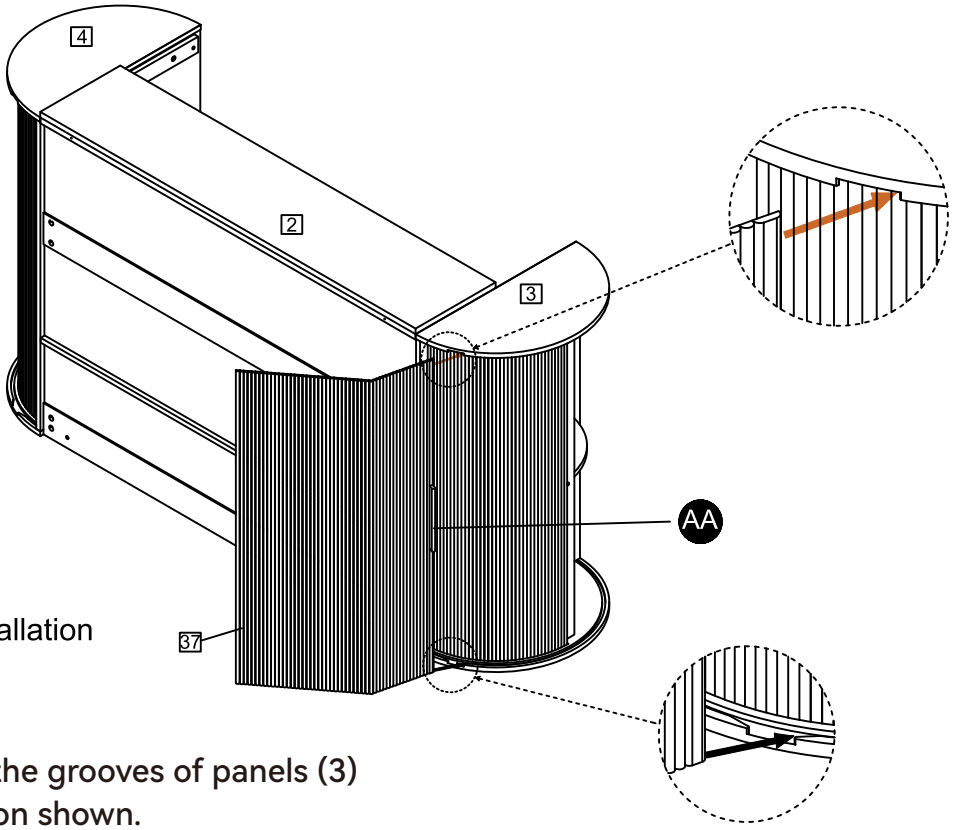

Pay attention to the installation direction of board(37).

Insert panel (37) into the grooves of panels (3) and (12) in the direction shown.

Assembly Instructions

Step 46

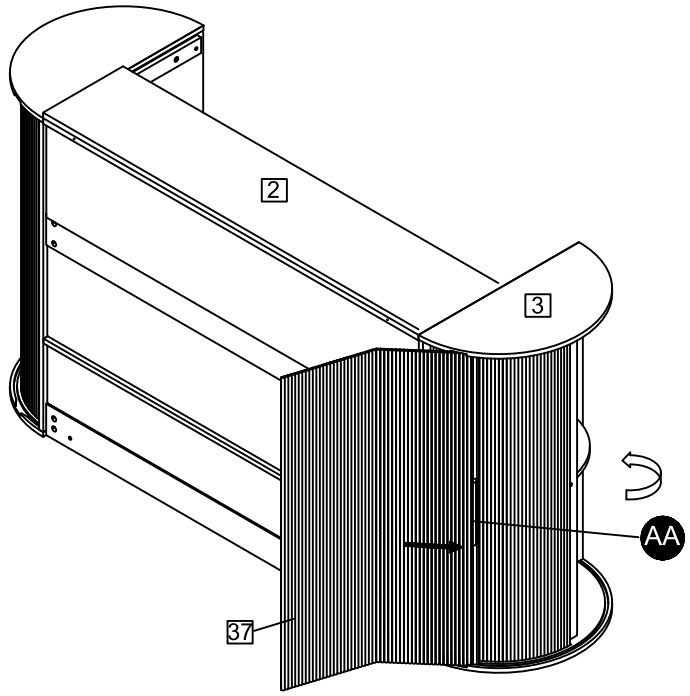

Slide panel (37) along the grooves of panels (3) and (12) to the correct position.

Step 47

V	Ø3.5*12	x 7	Y		x1set

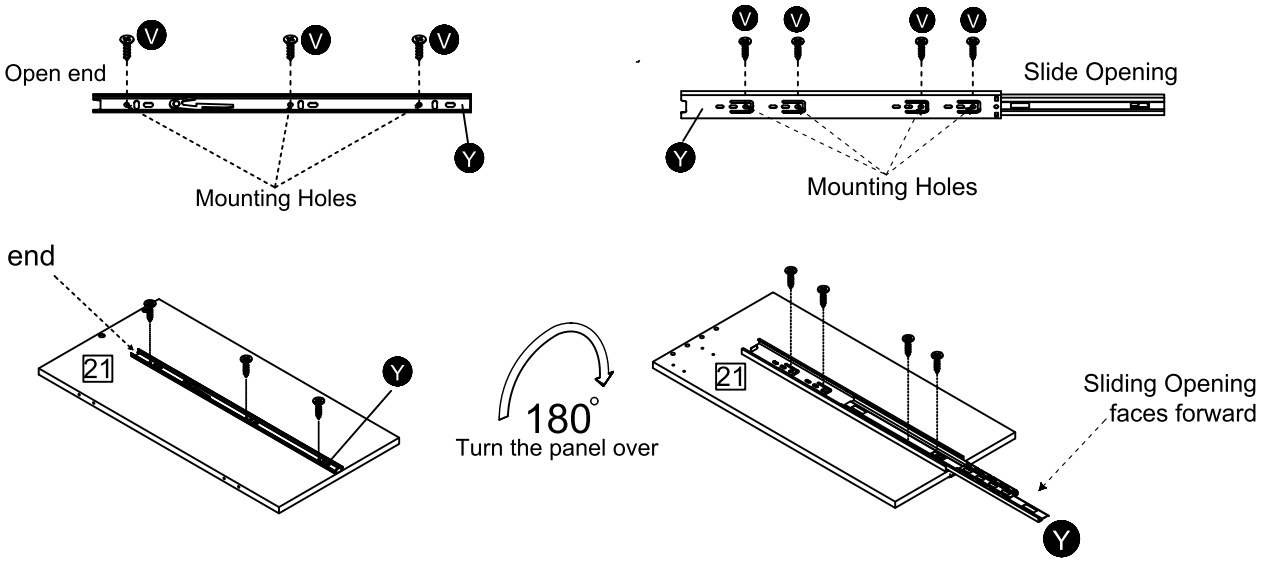

As shown, use screws (V) to secure drawer slide (Y) to panel (21).

Assembly Instructions

Step 48

V	Ø3.5*12	x 7	Y		x1set

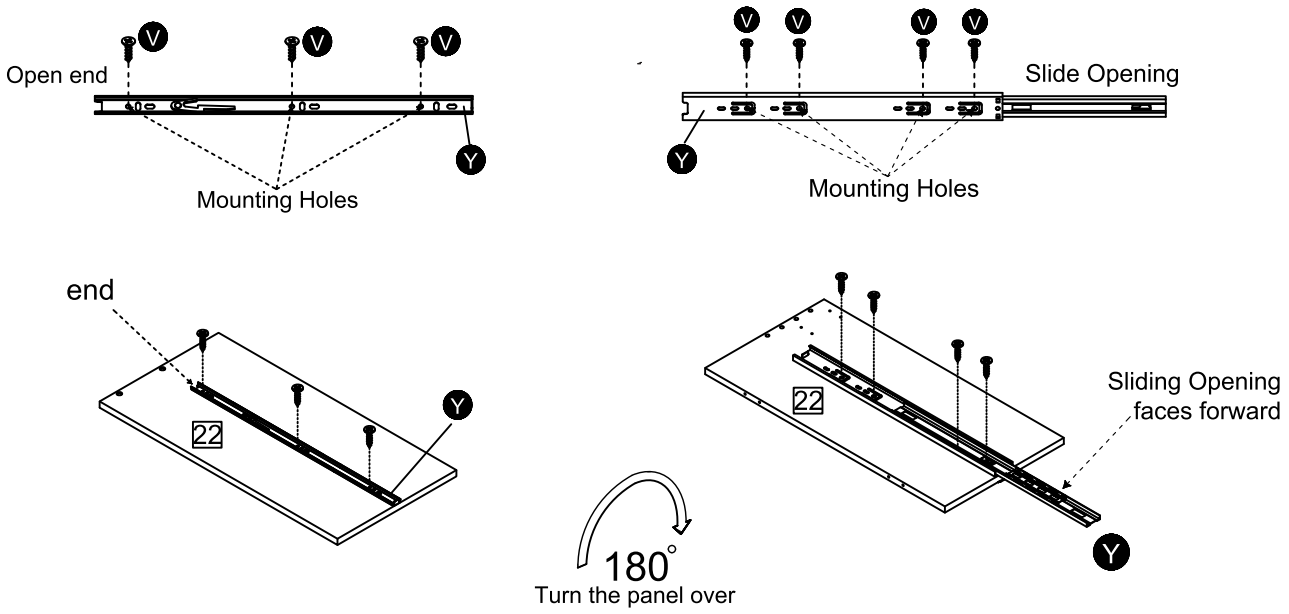

As shown, use screws (V) to secure drawer slide (Y) to panel (22).

Step 49

B	Ø6*30	x 4
R	Ø5*40	x 4

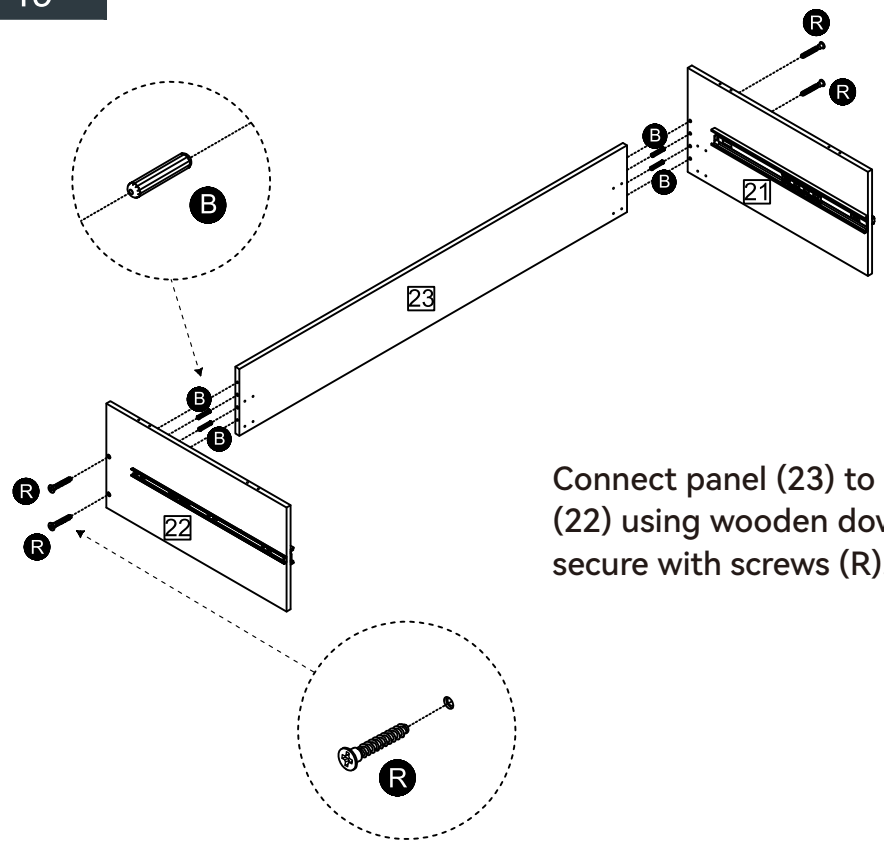

Connect panel (23) to panels (21) and (22) using wooden dowels (B), then secure with screws (R).

Assembly Instructions

Step 50

F	42*20*28	x 4
J	52*52*22	x 4
T	Ø4*14	x 8
V	Ø3.5*12	x16

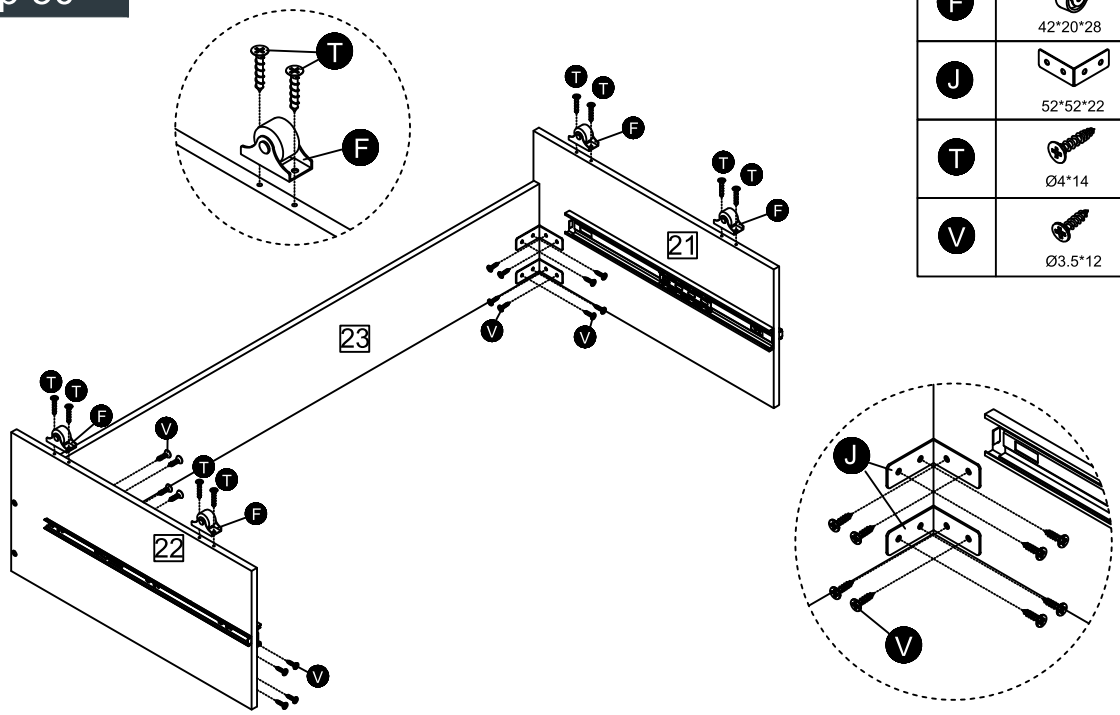

Secure hardware (J) using screws (V) to reinforce the connection of panel (23) with panels (21) and (22). Then attach caster (F) to panels (21) and (22) using screws (T).

Step 51

V	Ø3.5*12	x 7

Y		x1set

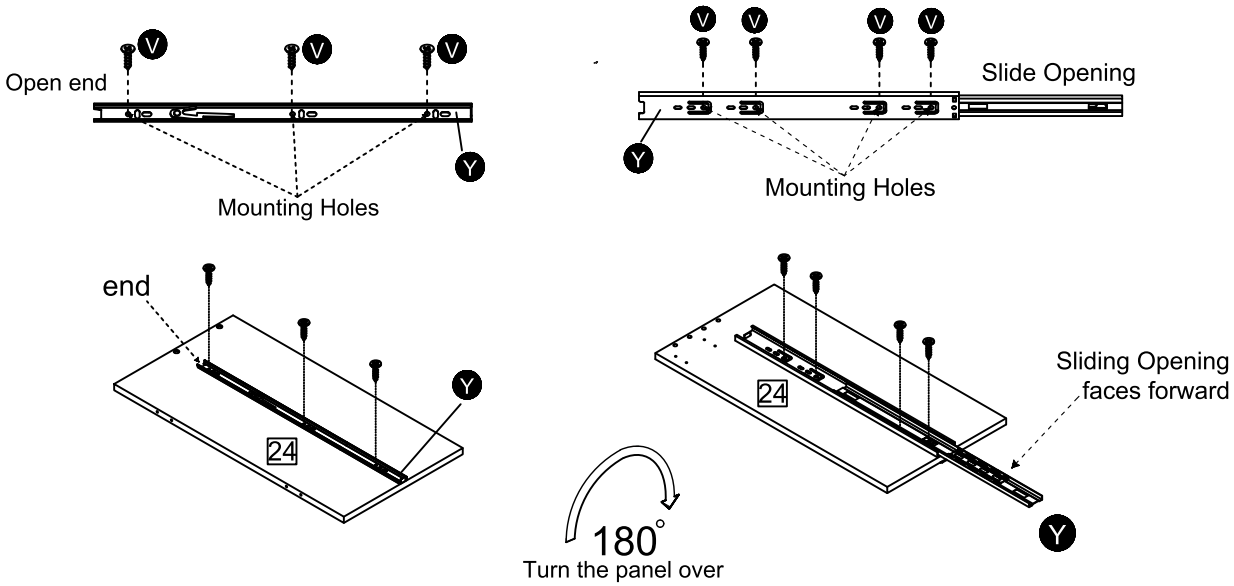

As shown, use screws (V) to secure drawer slide (Y) to panel (24).

Assembly Instructions

Step 52

V	Ø3.5*12	x 7	Y		x1set

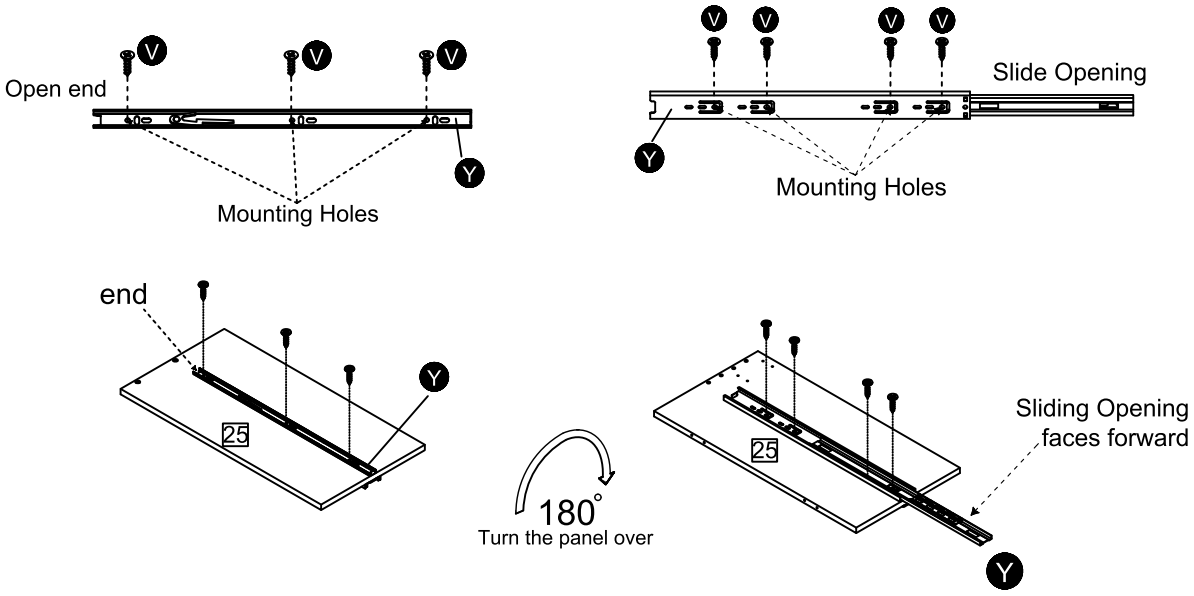

As shown, use screws (V) to secure drawer slide (Y) to panel (25)

Step 53

B	Ø6*30	x 4
R	Ø5*40	x 4

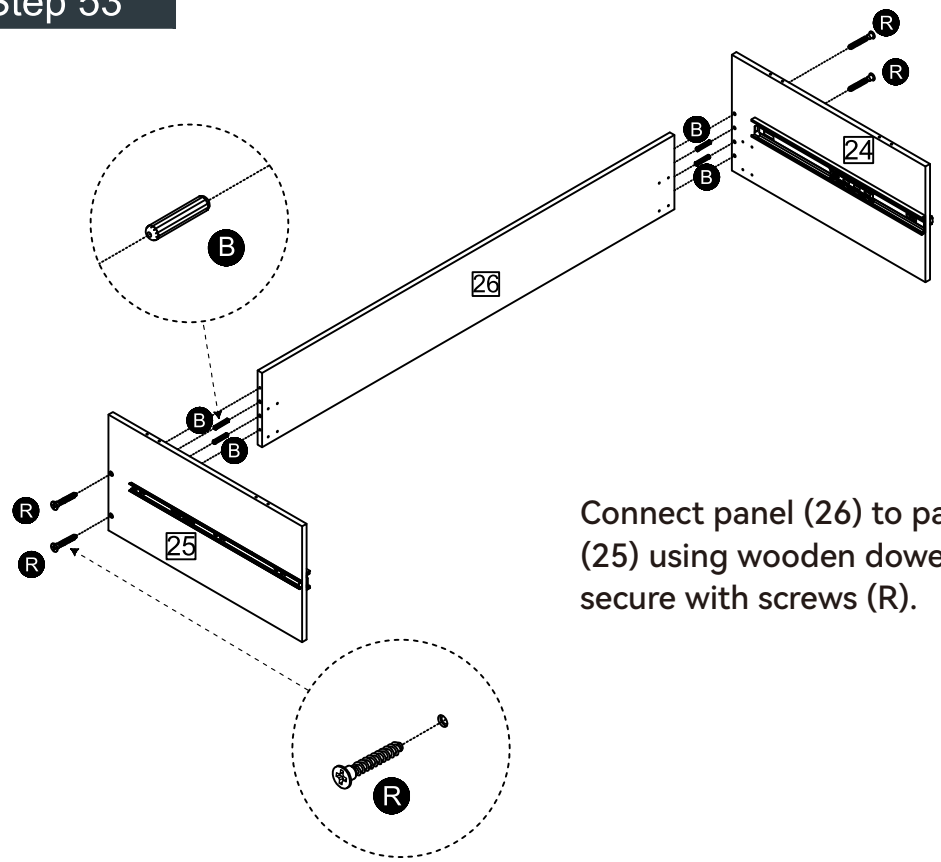

Connect panel (26) to panels (24) and (25) using wooden dowels (B), then secure with screws (R).

Assembly Instructions

Step 54

F	42*20*28	x 4
J	52*52*22	x 4
T	Ø4*14	x 8
V	Ø3.5*12	x16

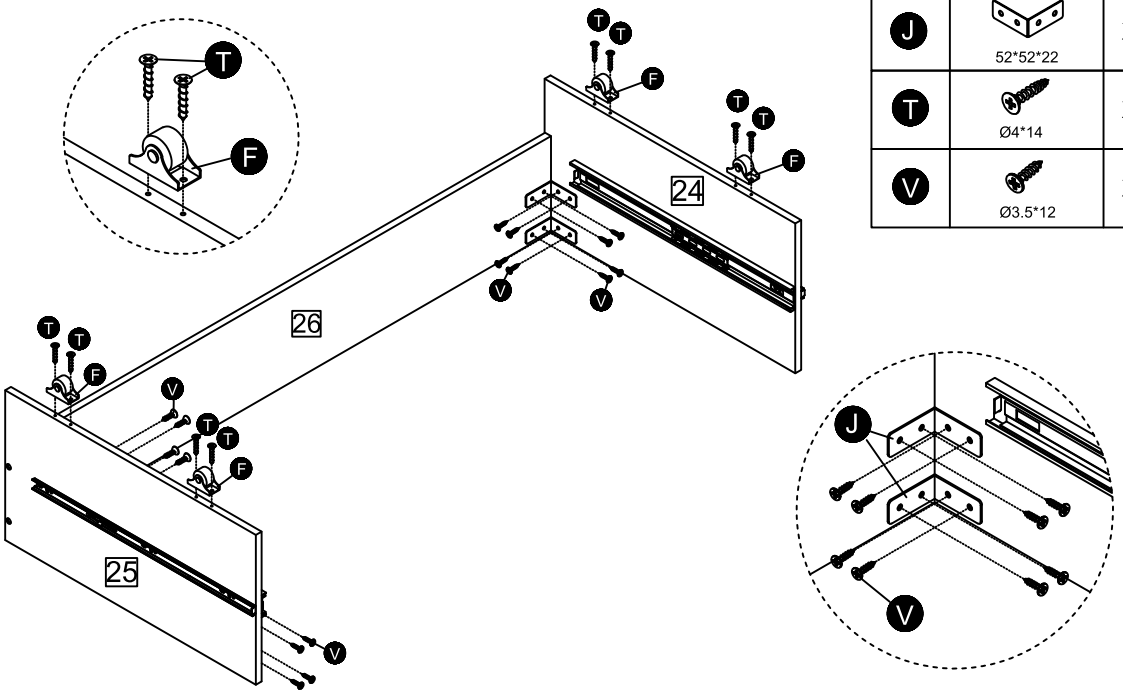

Secure hardware (J) with screws (V) to reinforce the connection between panel (26) and panels (24) and (25). Then attach caster (F) with screws (T).

Step 55

R	Ø5*40	x 6

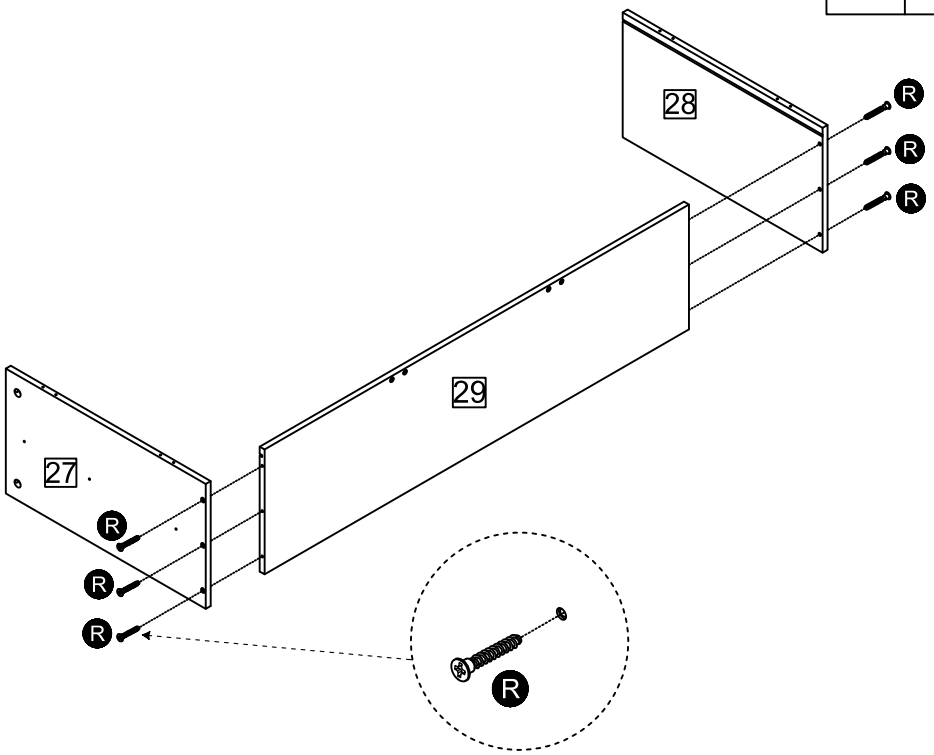

Use screws (R) to connect panels (27) and (28) to panel (29).

Assembly Instructions

Step 56

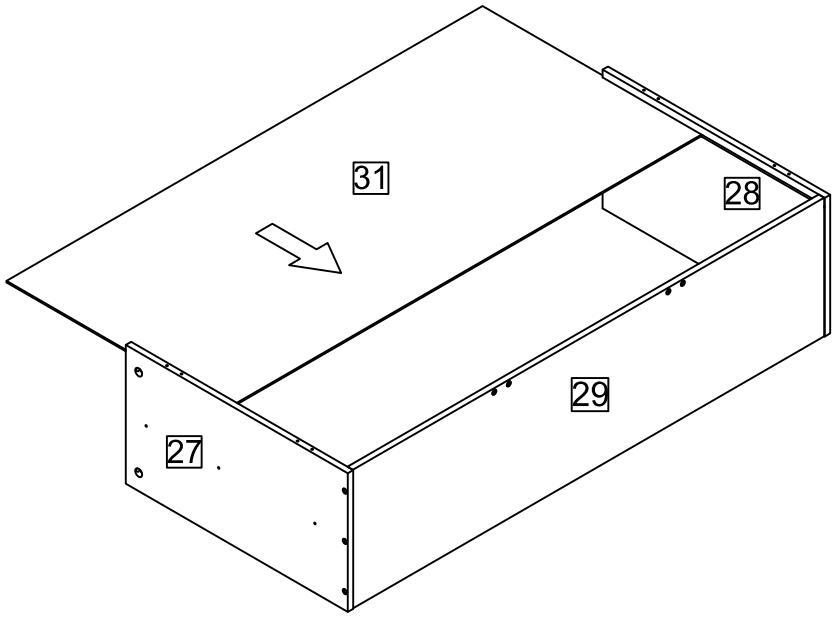

Insert panel (31) into the grooves of panels (27), (28), and (29).

Step 57

R	Ø5*40	x 4

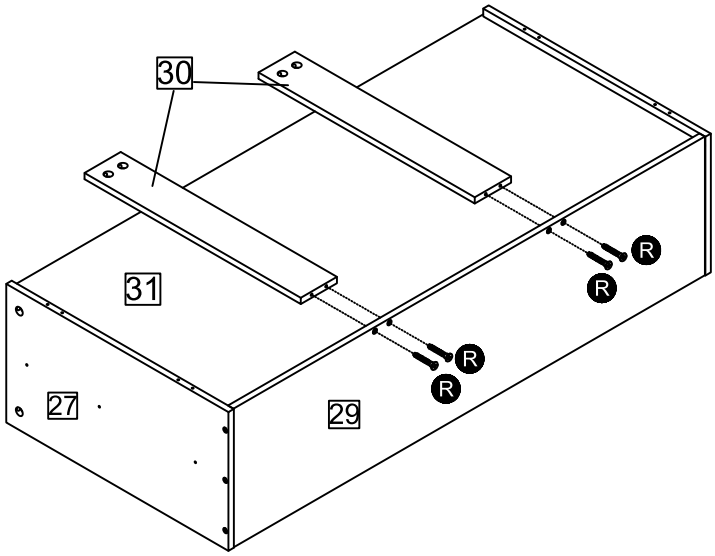

Secure panel (30) to panel (29) using screws (R).

Assembly Instructions

Step 58

V	Ø3.5*12	x 6
Y		x 2

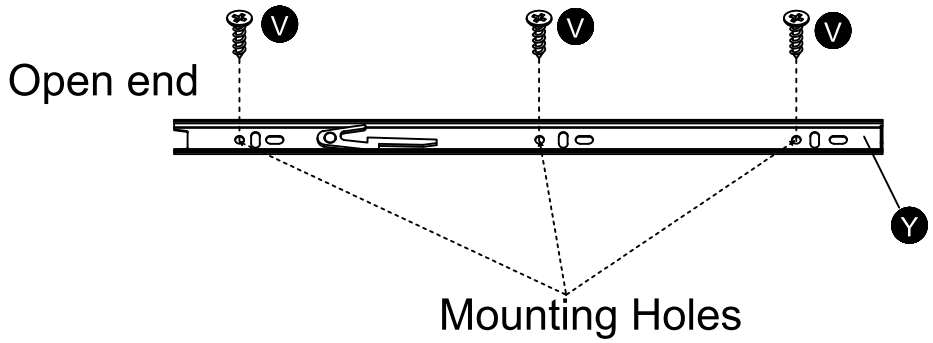

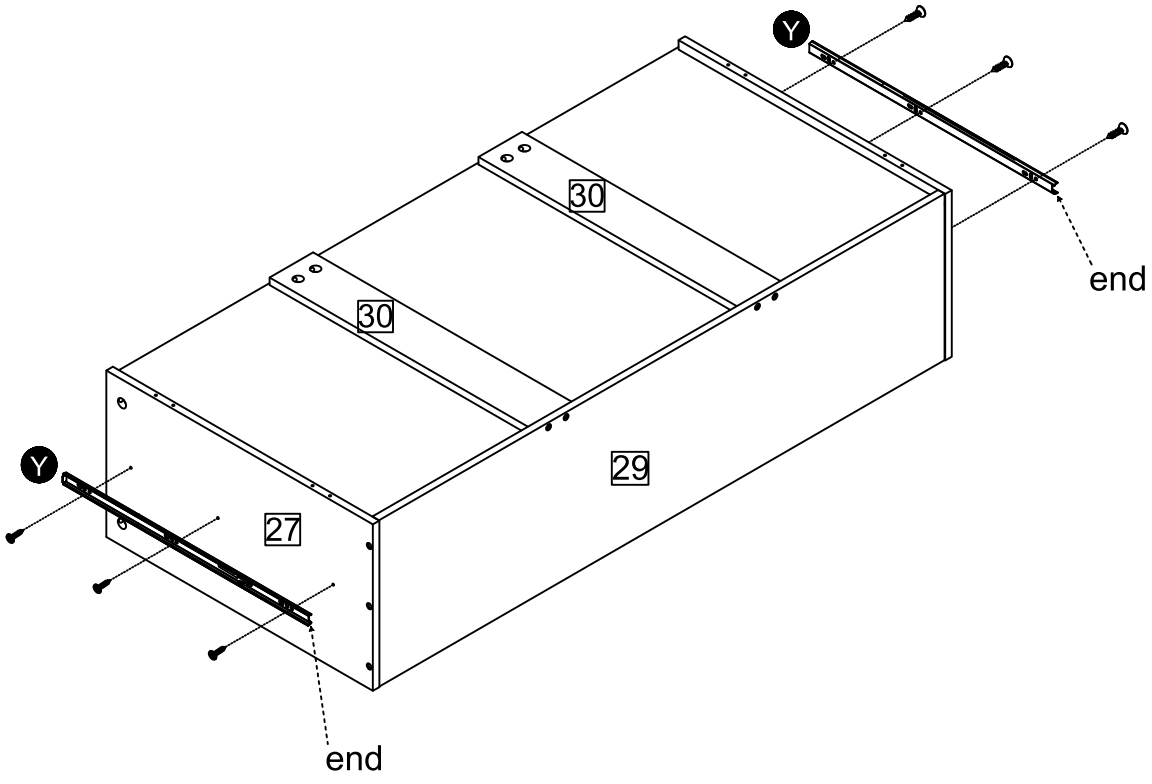

Use screws (V) to secure drawer slides (Y) to panels (27) and (28) in the direction shown.

Assembly Instructions

Step 59

F	42*20*28	x 4
T	Ø4*14	x 8

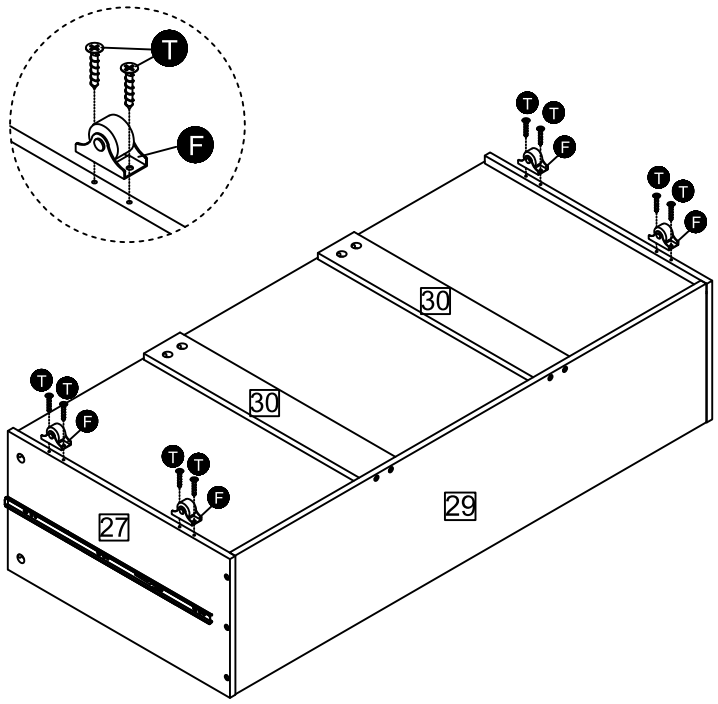

Attach casters (F) to panels (27) and (28) using screws (T).

Step 60

C	Ø6.5*35	x 8
E	Ø4*25	x 4
AA	200*18*9	x 2

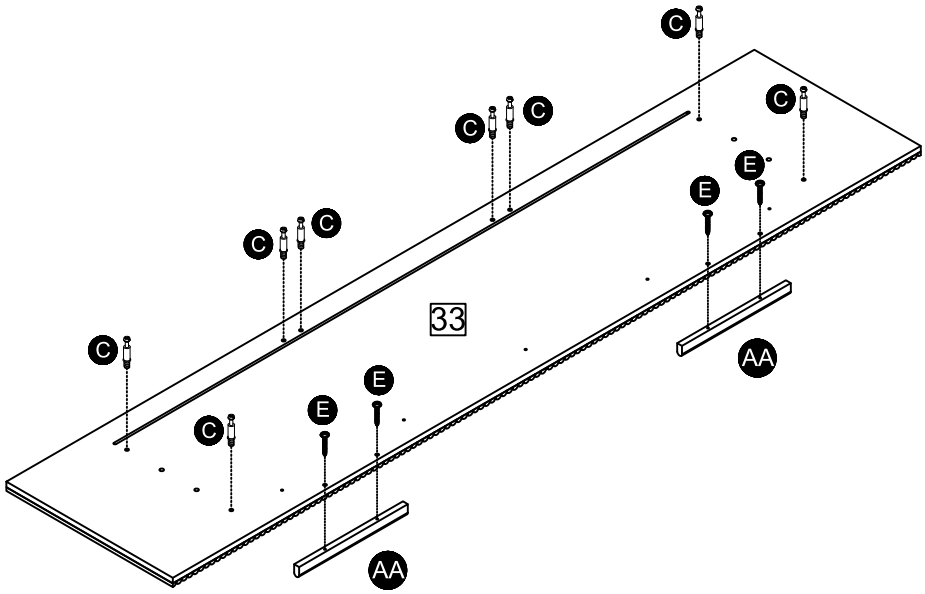

Attach hardware (C) to panel (33), then install handle (AA) using screws (E).

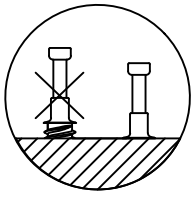

Assembly Instructions

Step 61

N	Ø4*25	x 5

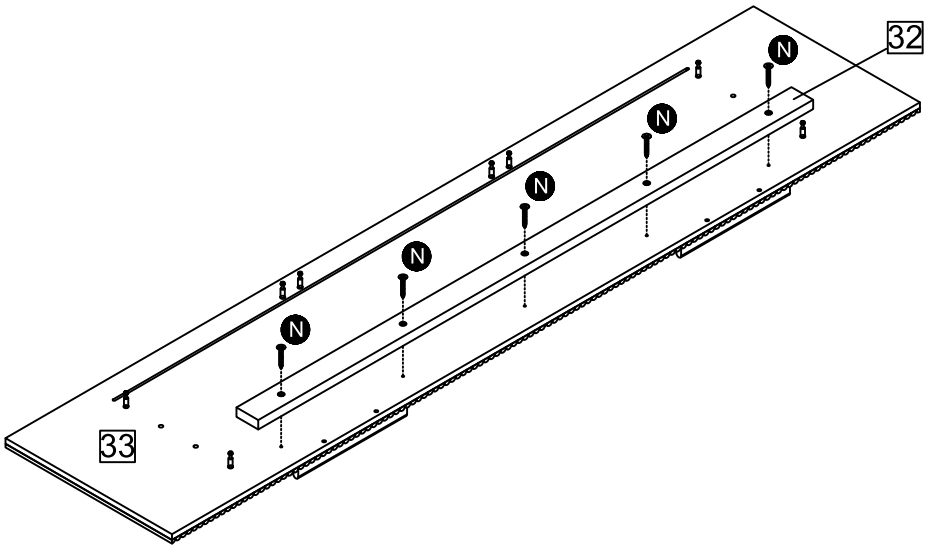

Secure panel (32) to panel (33) using screws (N).

Step 62

B	Ø6*30	x 4
D	Ø15*9.5	x 8

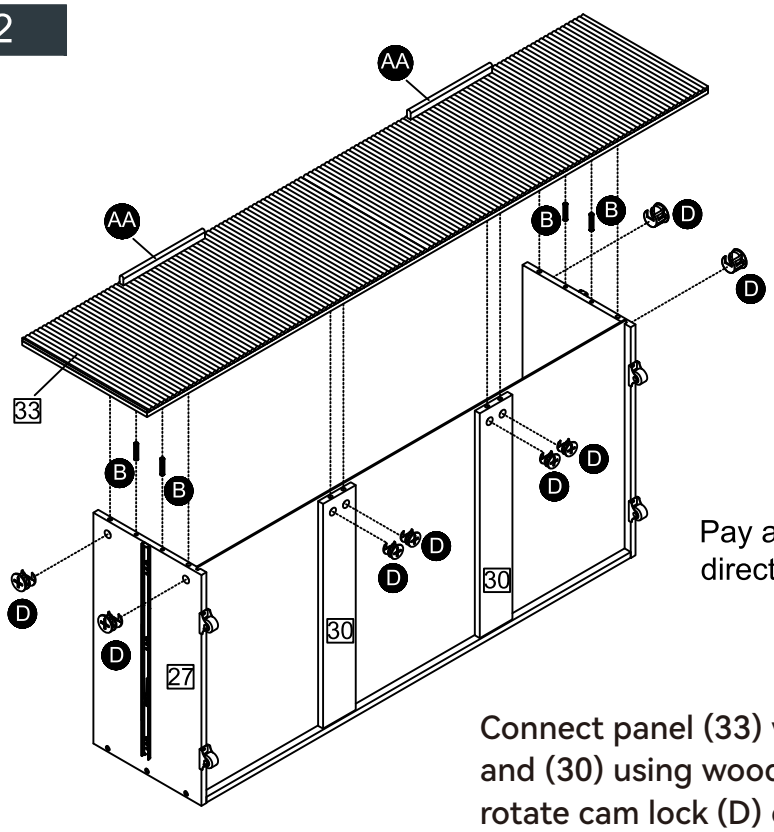

Pay attention to the installation direction of board(33).

Connect panel (33) with panels (27), (28), and (30) using wooden dowels (B), then rotate cam lock (D) clockwise to secure.

Assembly Instructions

Step 63

Try to find a partner to install with you, which can speed up the installation efficiency and shorten the time.

Please make sure that the balls in the tracks on both sides are pulled to the top, and then insert the tracks to ensure smooth entry.

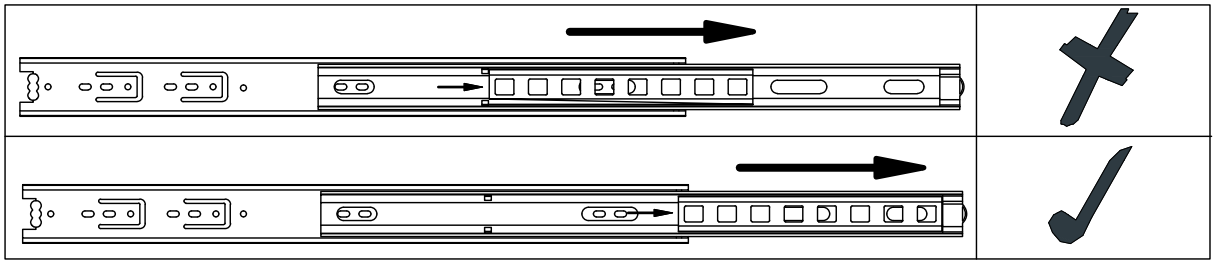

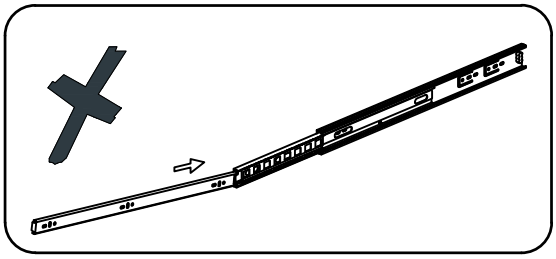

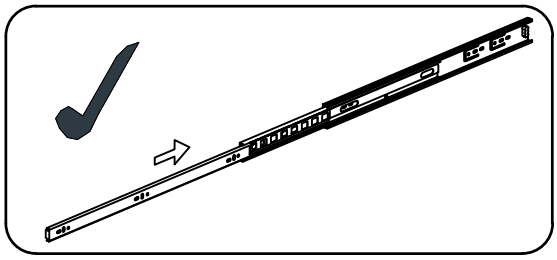

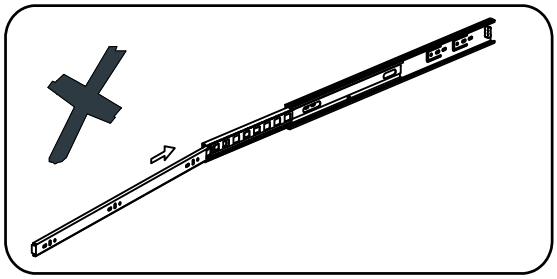

1.Drawers must be horrizontally put into the cabinets.
2.Make sure both sides sliders match well to avoid damage.

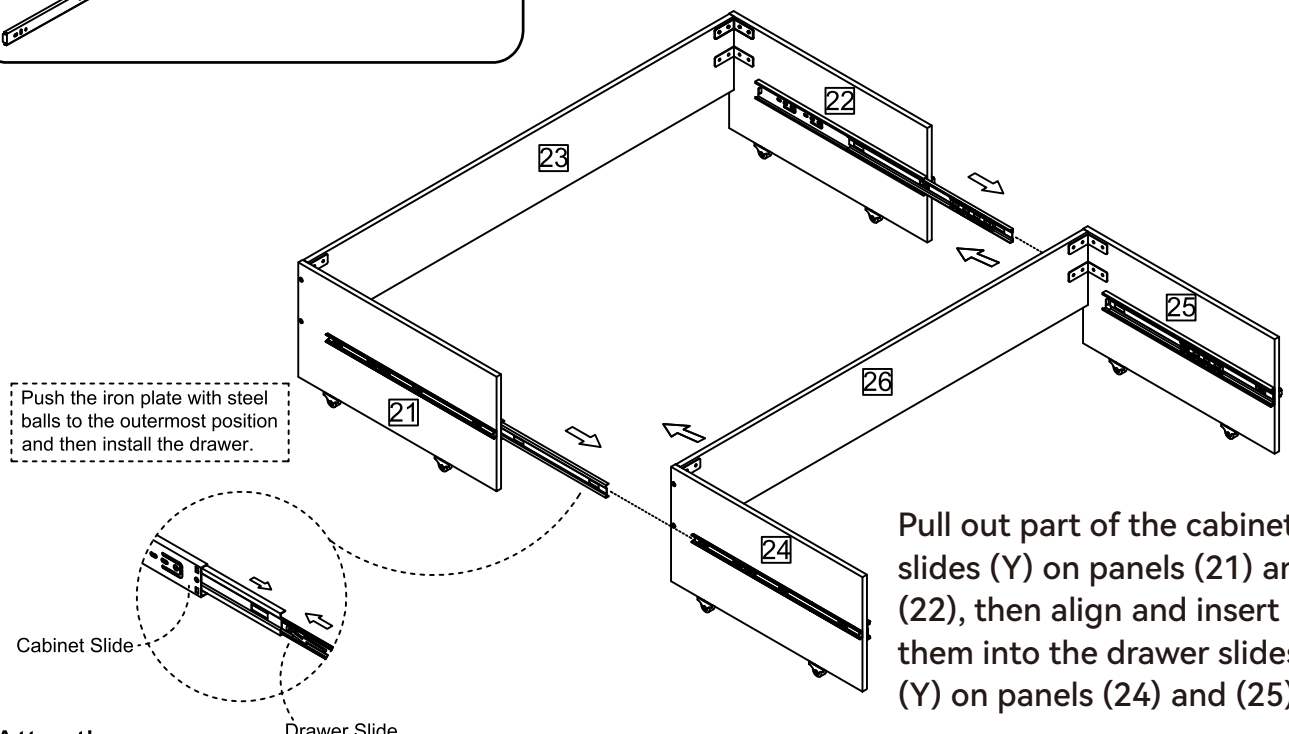

Pull out part of the cabinet slides (Y) on panels (21) and (22), then align and insert them into the drawer slides (Y) on panels (24) and (25).

Attention

1.Pull out the installed on the cabinet.
2.Align the slide runners on the drawer with the unit and push it carefully inside until it stops.

★ If the drawer does not go in smoothly please take it out and repeat the steps.

Assembly Instructions

Step 64

Try to find a partner to install with you, which can speed up the installation efficiency and shorten the time.

Please make sure that the balls in the tracks on both sides are pulled to the top, and then insert the tracks to ensure smooth entry.

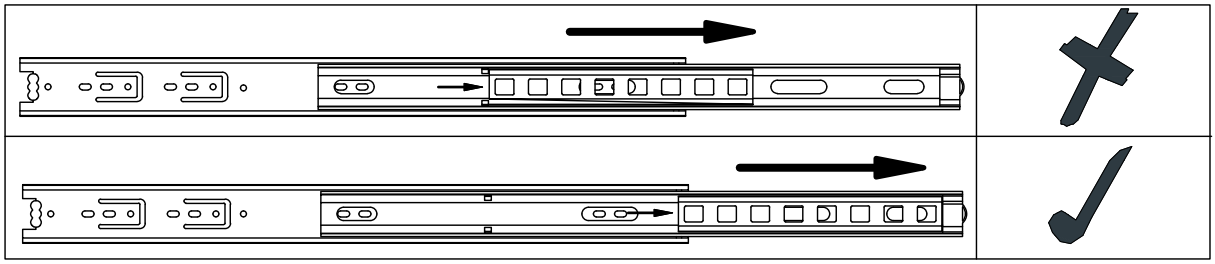

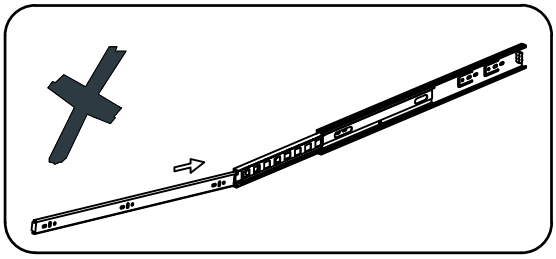

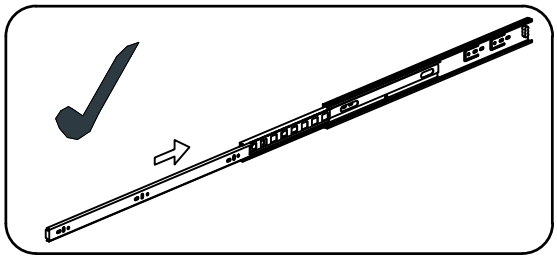

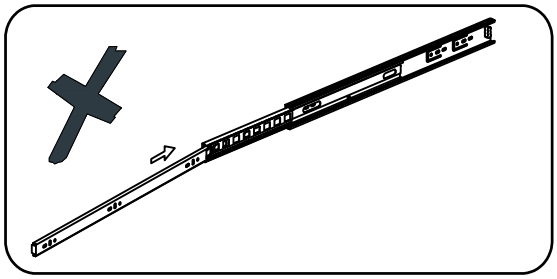

1.Drawers must be horrizontally put into the cabinets.
2.Make sure both sides sliders match well to avoid damage.

Pull out part of the cabinet slides (Y) on panels (24) and (25), then align and insert them into the drawer slides (Y) on panels (27) and (28).

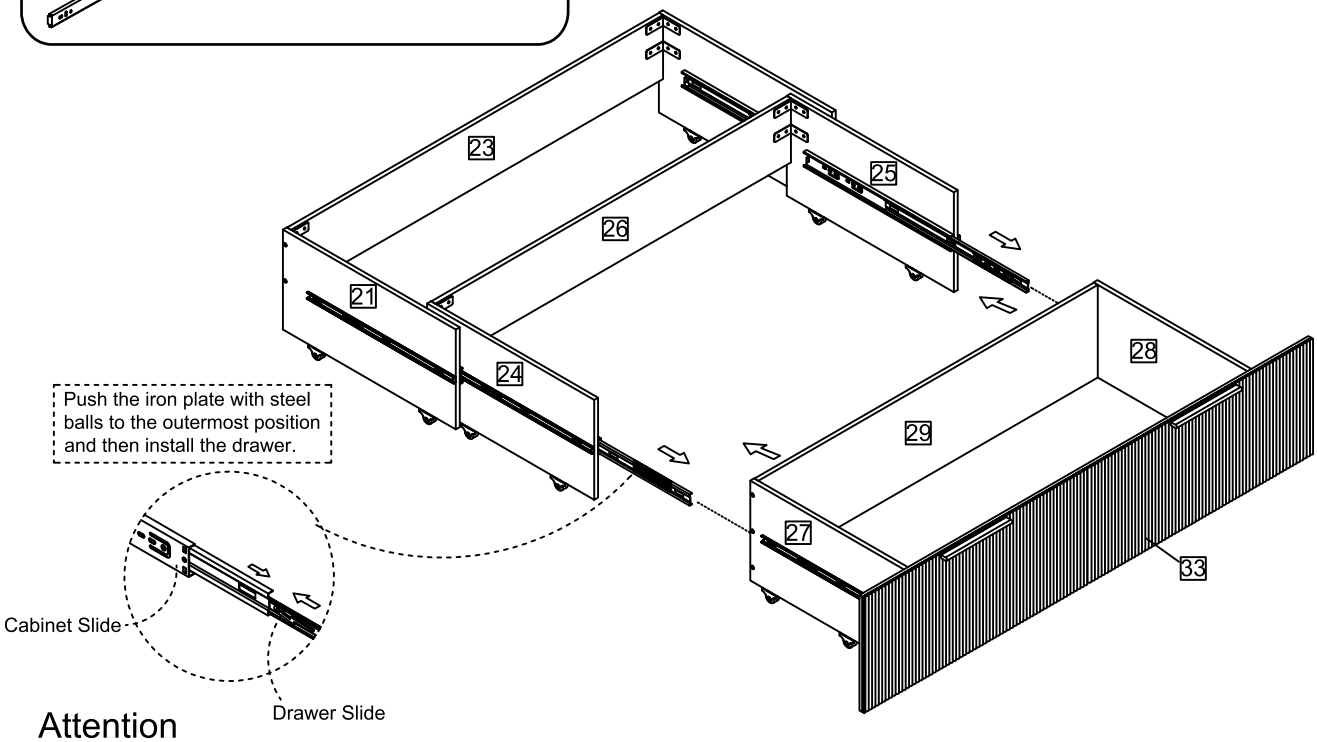

Attention

1.Pull out the installed on the cabinet.
2.Align the slide runners on the drawer with the unit and push it carefully inside until it stops.

★ If the drawer does not go in smoothly please take it out and repeat the steps.

Assembly Instructions

Step 65

Try to find a partner to install with you, which can speed up the installation efficiency and shorten the time.

Please make sure that the balls in the tracks on both sides are pulled to the top, and then insert the tracks to ensure smooth entry.

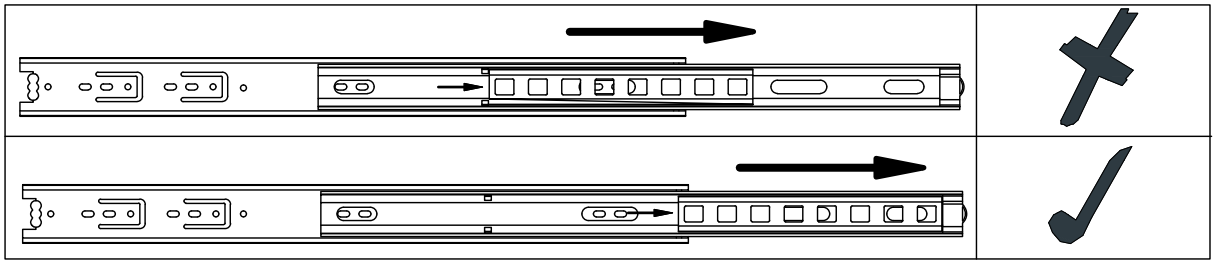

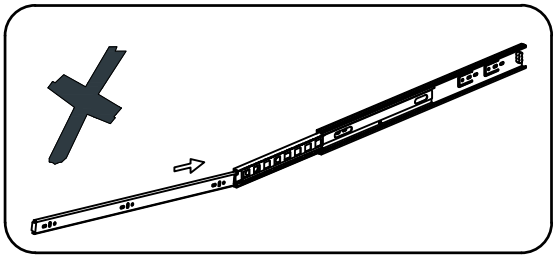

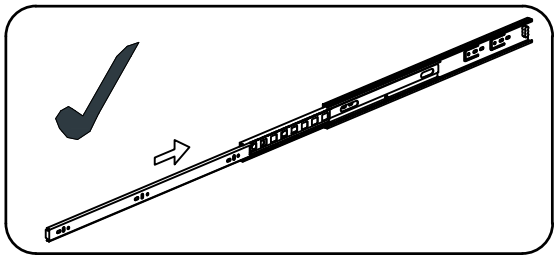

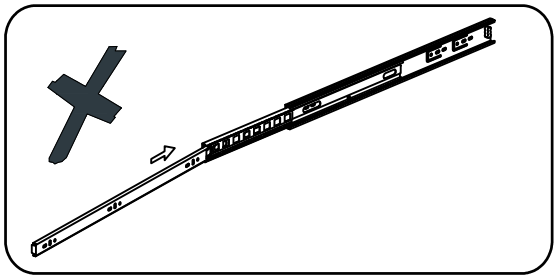

1.Drawers must be horrizontally put into the cabinets.
2.Make sure both sides sliders match well to avoid damage.

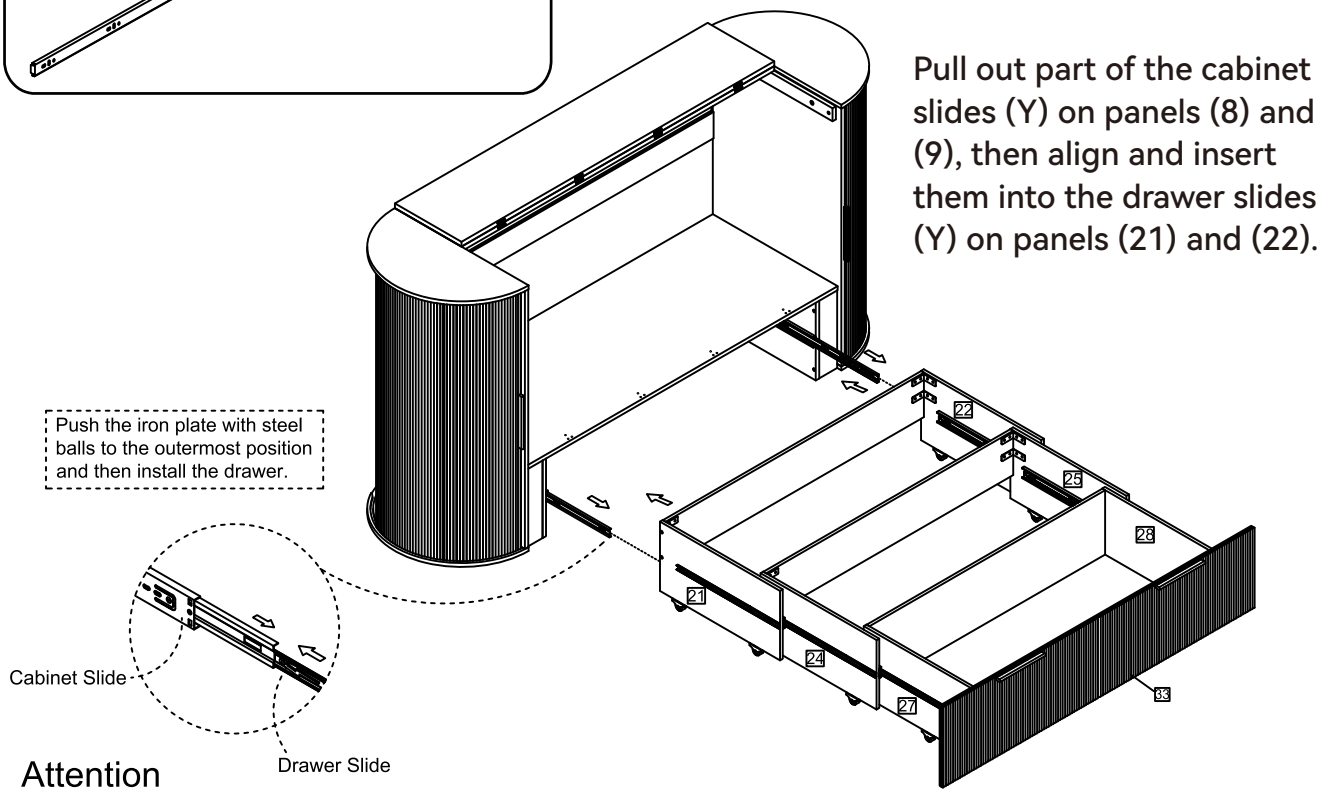

Pull out part of the cabinet slides (Y) on panels (8) and (9), then align and insert them into the drawer slides (Y) on panels (21) and (22).

Attention

1.Pull out the installed on the cabinet.
2.Align the slide runners on the drawer with the unit and push it carefully inside until it stops.

★ If the drawer does not go in smoothly please take it out and repeat the steps.

Assembly Instructions

Step 66

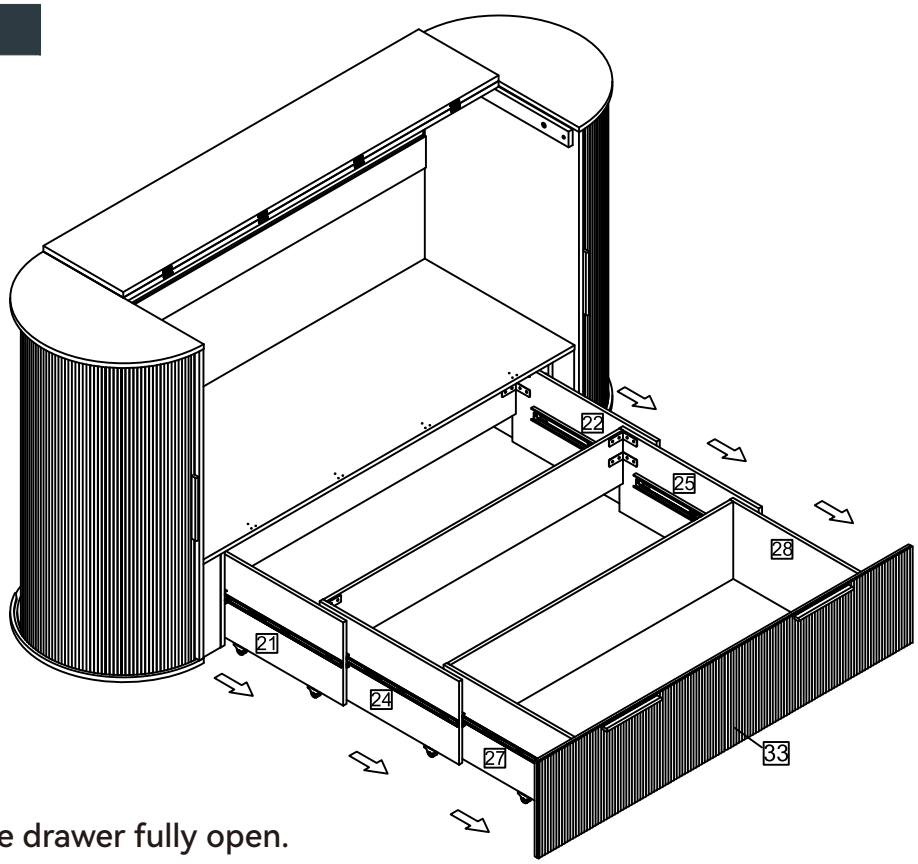

Pull the drawer fully open.

Step 67

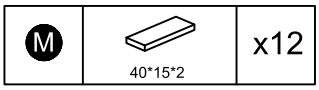

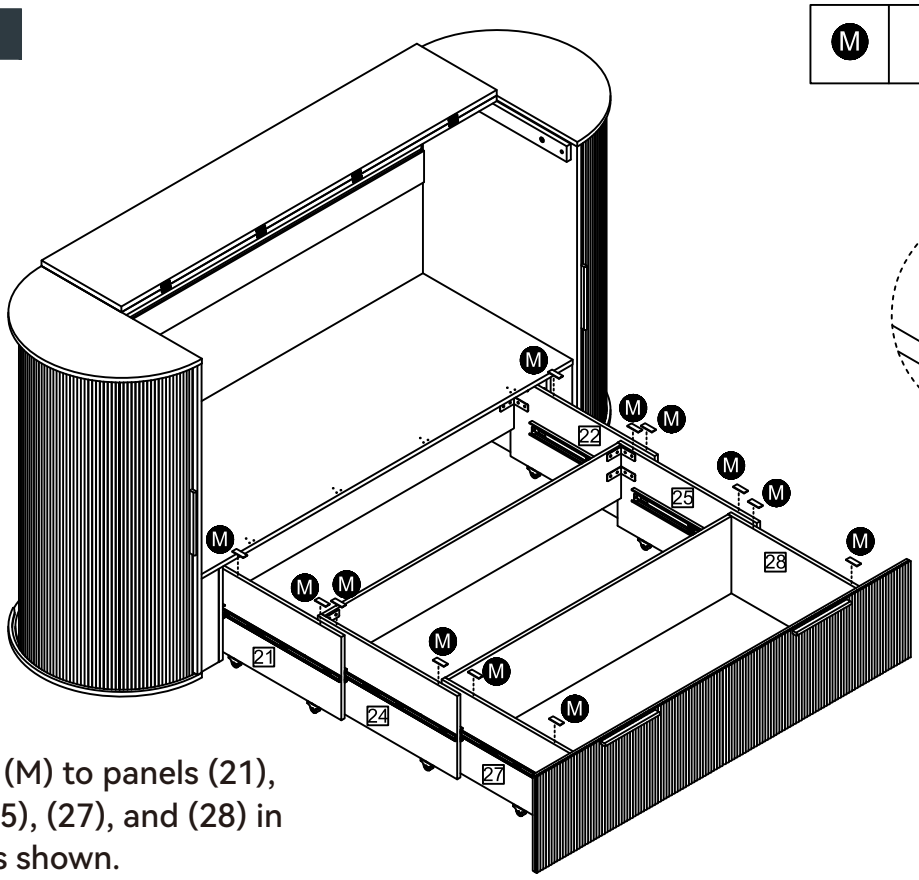

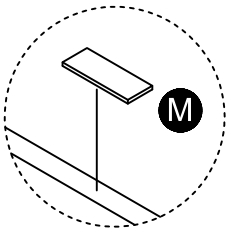

Attach pads (M) to panels (21), (22), (24), (25), (27), and (28) in the positions shown.

Assembly Instructions

Step 68

I	37.5*36	x 2
BB	Ø3*14	x 8

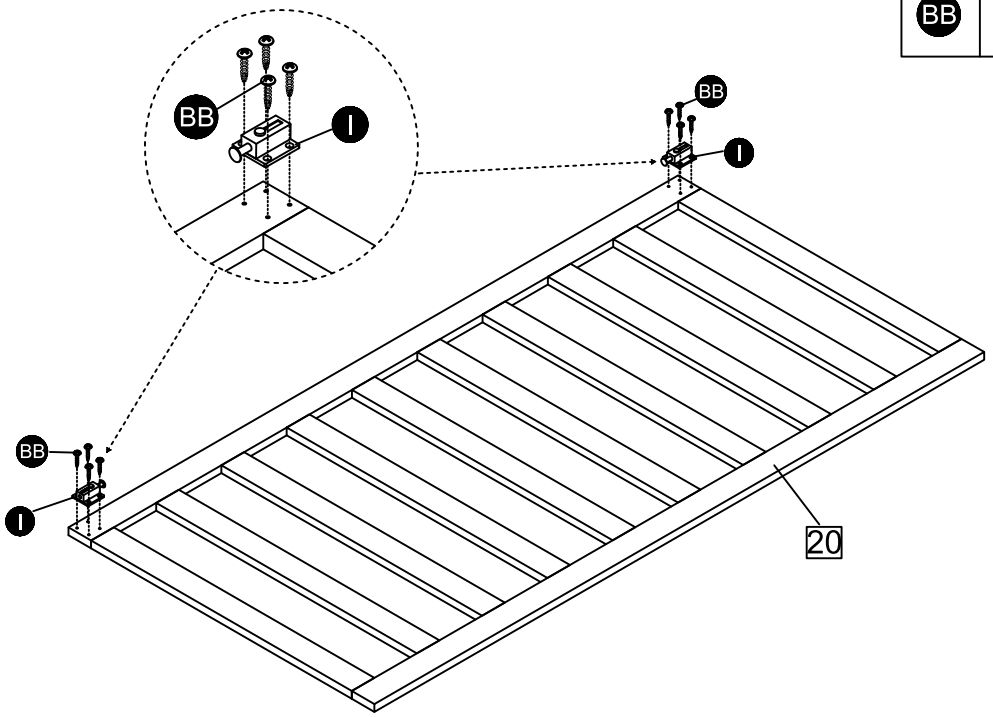

Secure hardware (I) to panel (20) using screws (BB).

Step 69

E	Ø4*25	x 8
AA	200*18*9	x 4

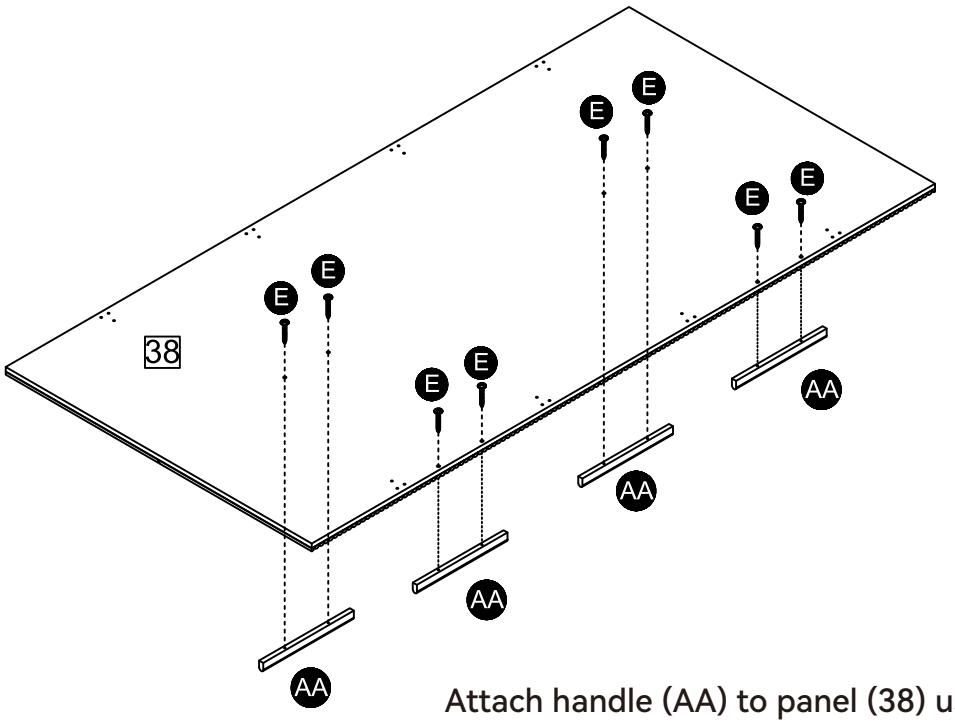

Attach handle (AA) to panel (38) using screws (E).

Assembly Instructions

Step 70

G	83*30	x 4
V	Ø3.5*12	x 24

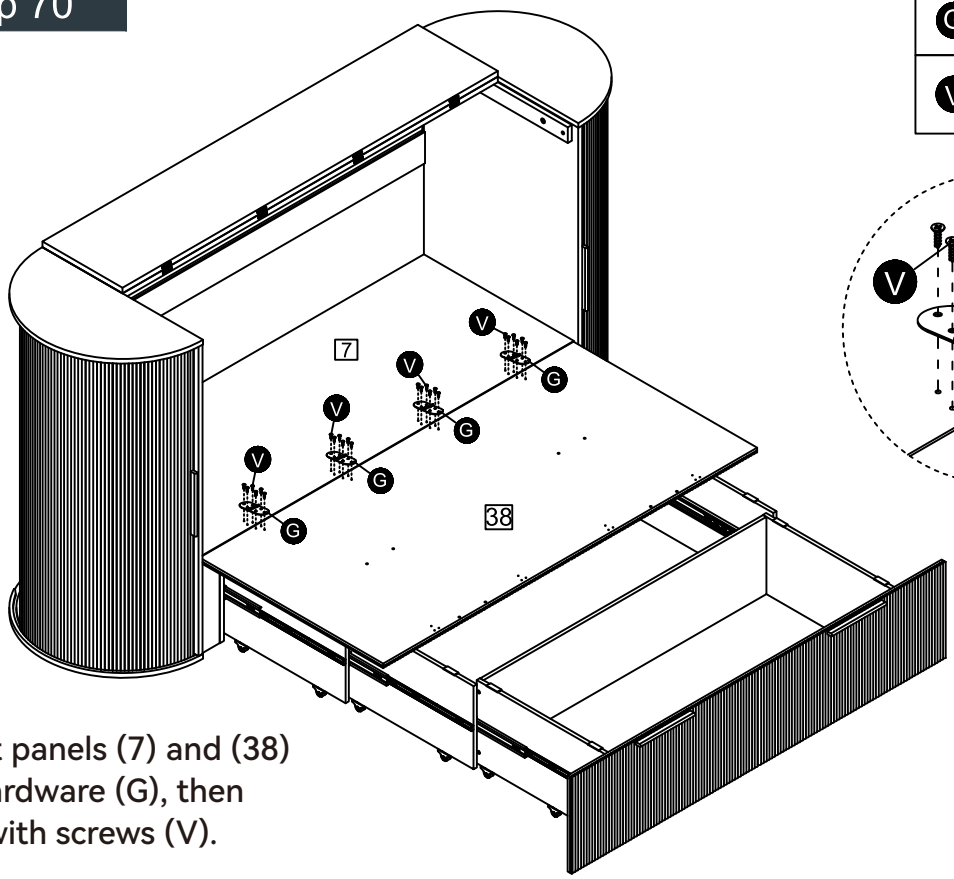

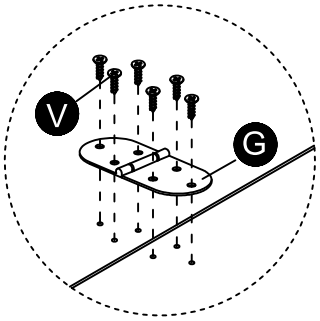

Connect panels (7) and (38) using hardware (G), then secure with screws (V).

Step 71

G	83*30	x 4
V	Ø3.5*12	x 24

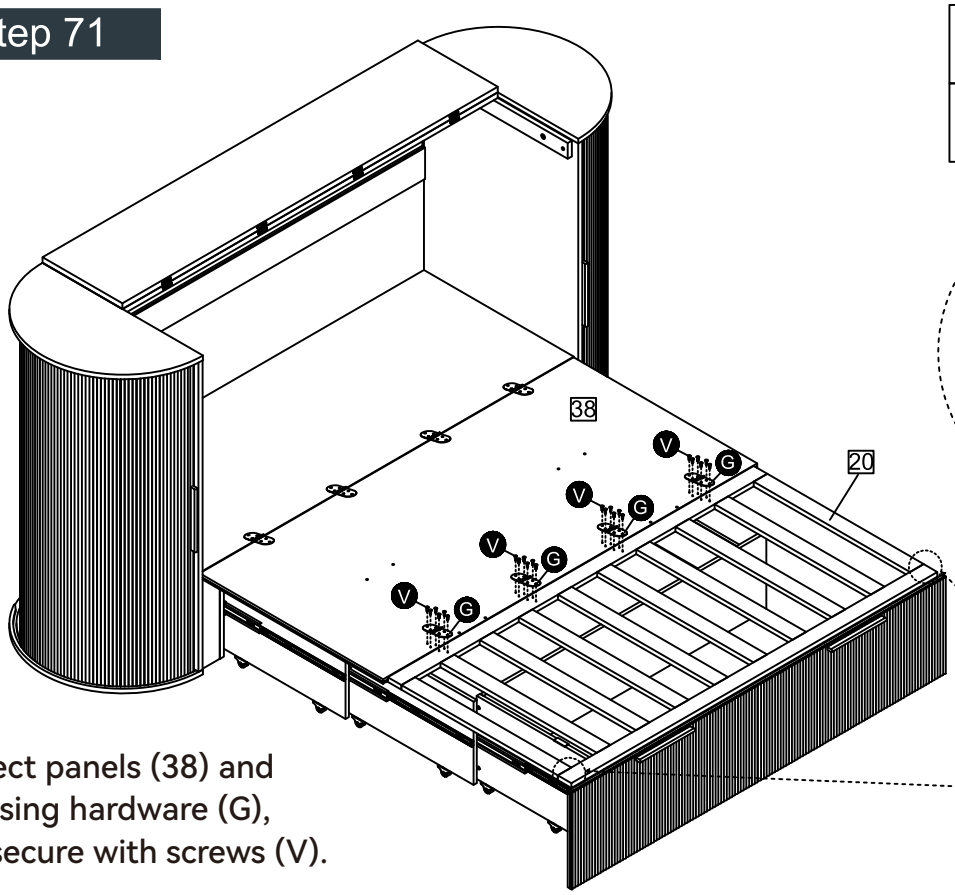

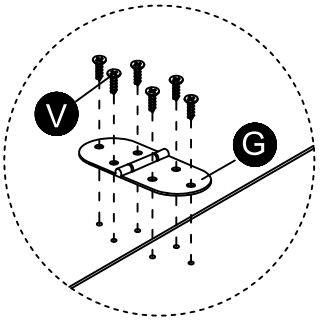

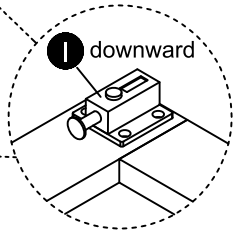

Connect panels (38) and (20) using hardware (G), then secure with screws (V).

Assembly Instructions

Step 72

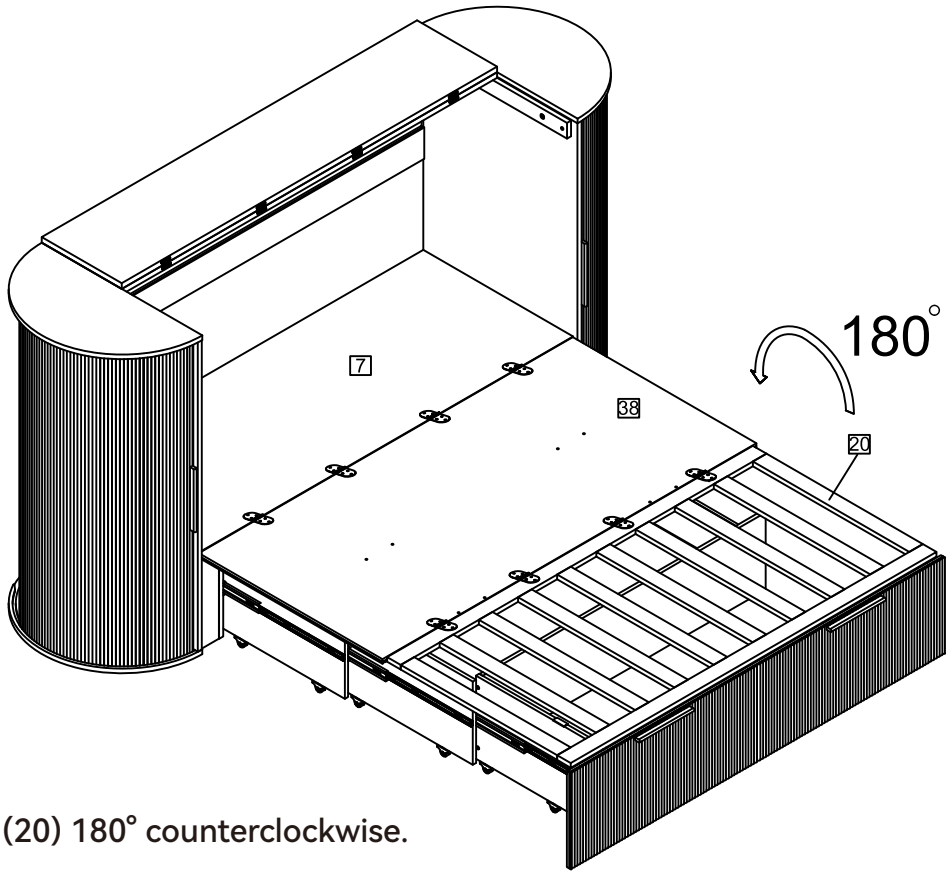

Rotate panel (20) 180° counterclockwise.

Step 73

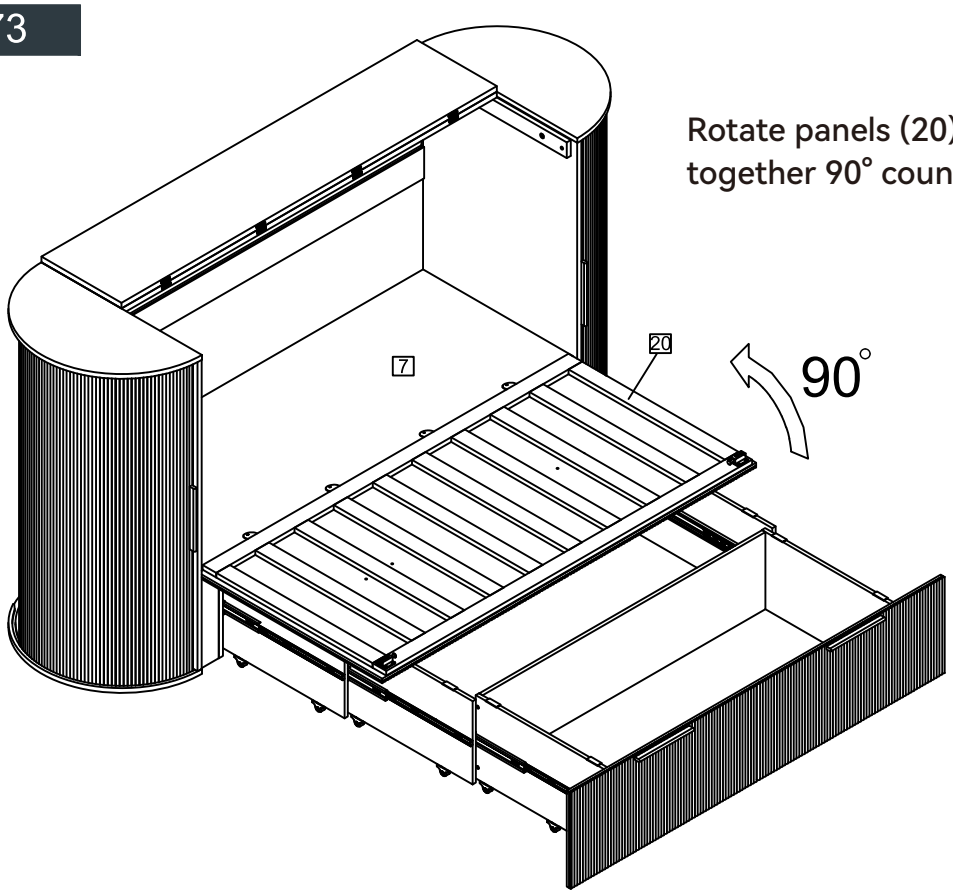

Rotate panels (20) and (38) together 90° counterclockwise.

Assembly Instructions

Step 74

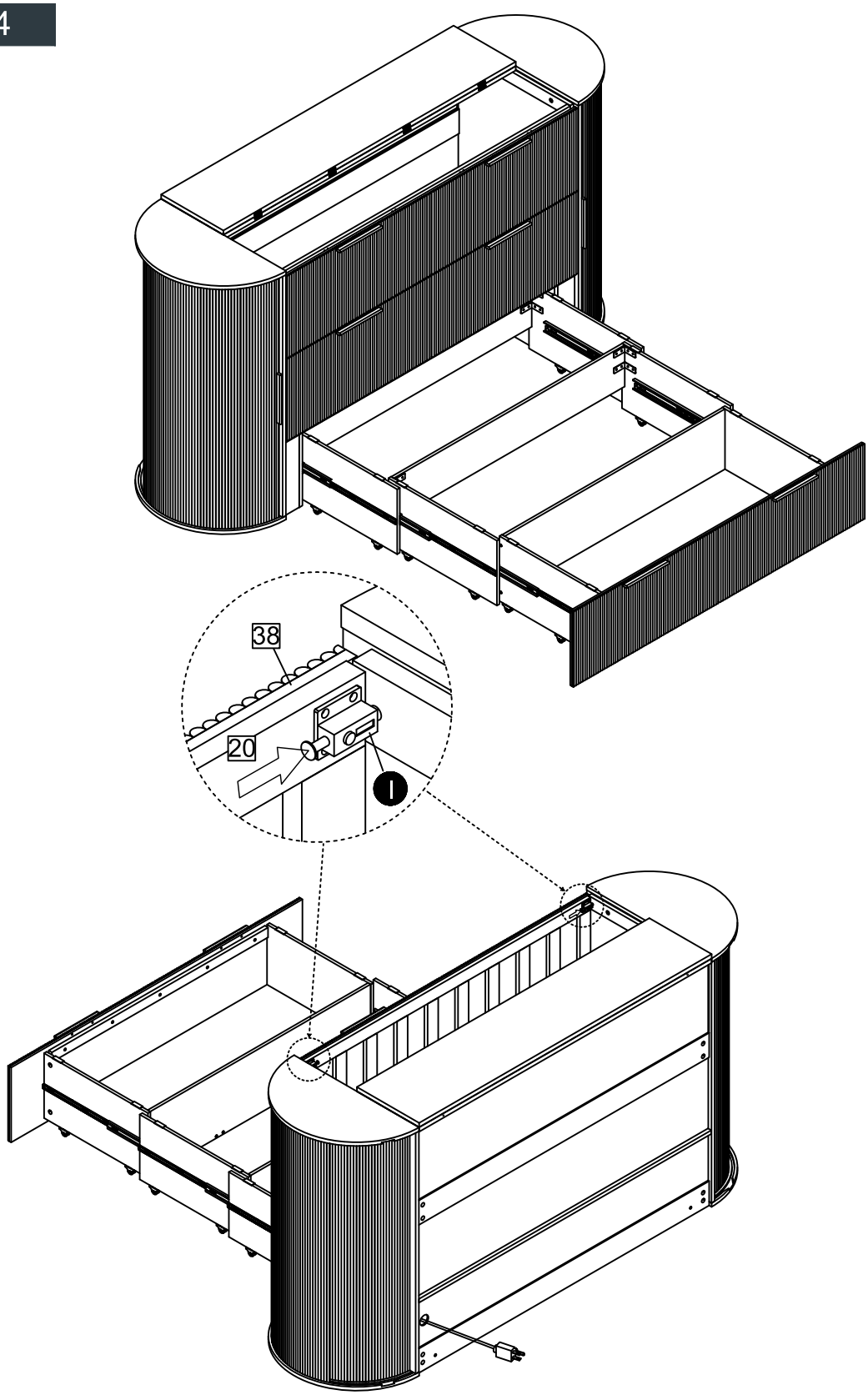

Align hardware (I) with the holes on panels (18) and (19). Press the button on hardware (I) as shown to secure panels (20) and (38).

Assembly Instructions

Step 75

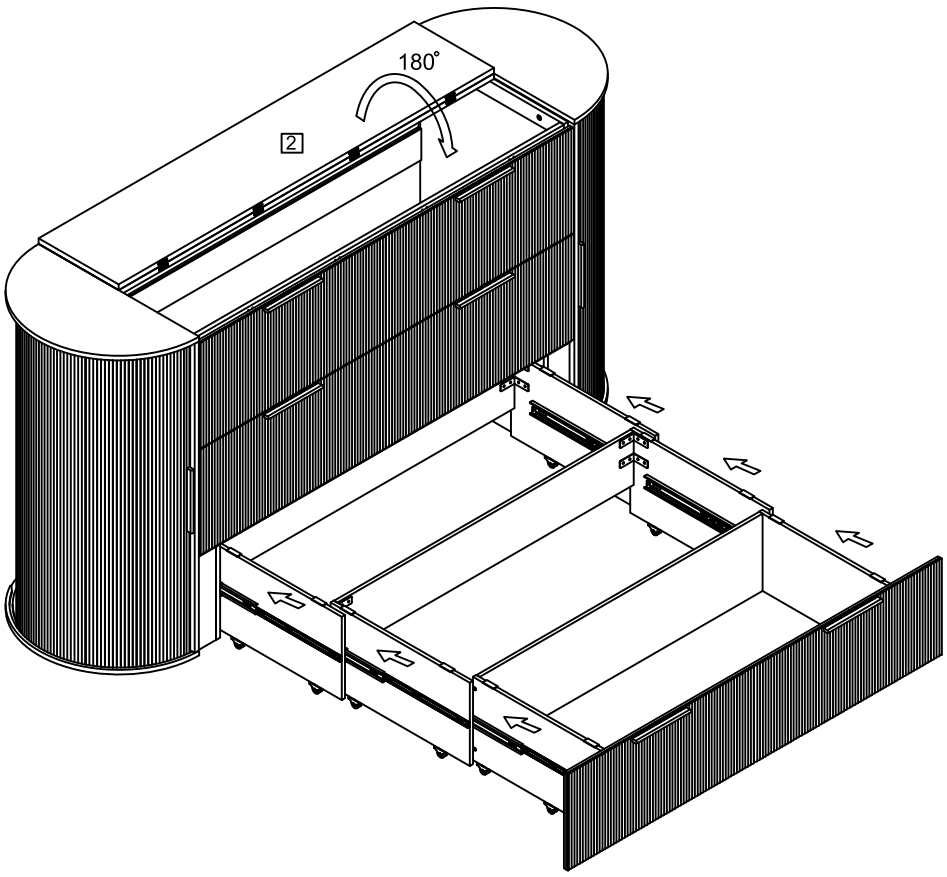

Rotate panel (2) 180° clockwise, then slide the drawers back into the cabinet as shown.

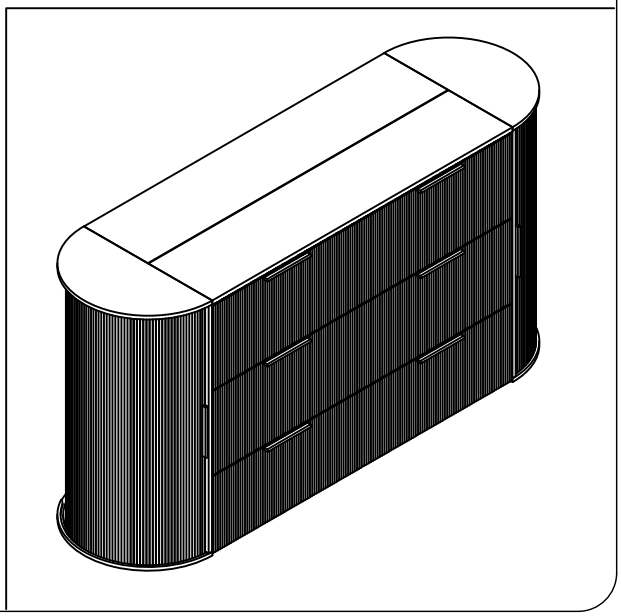

Assembly Instructions

Step 76

L	ø3*14	x 14
Z		x1set

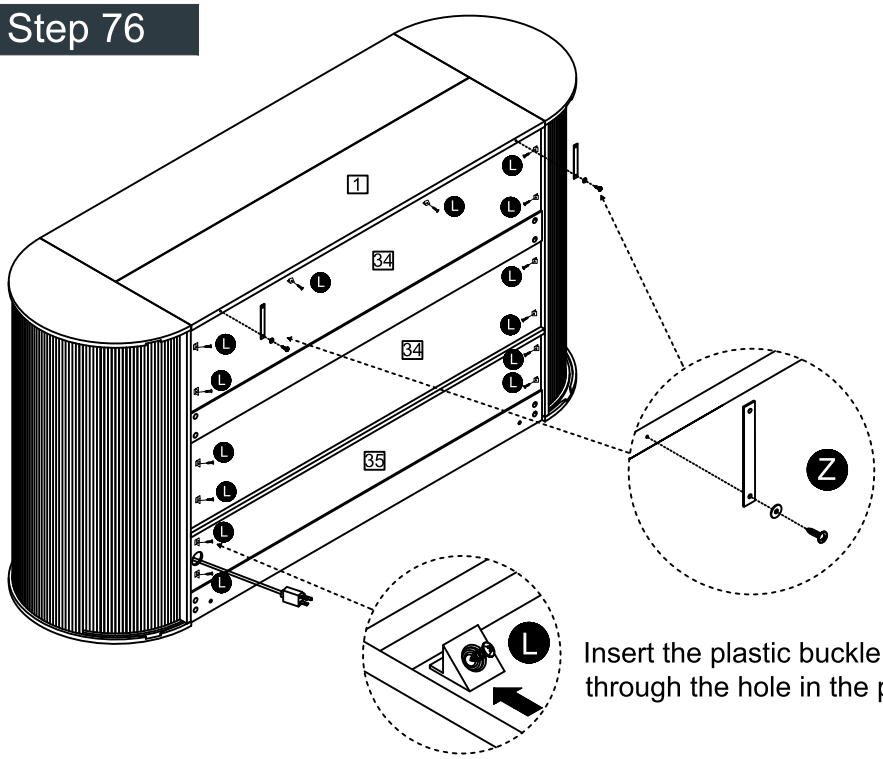

Insert the plastic buckle into the back plate slot , screw through the hole in the plastic buckle and lock it in place.

Insert the plastic parts from hardware (L) into the gaps between back panels (34) and (35), then secure them with screws. Fix the anti-tip strap to board (1) using small screws and mounting brackets from accessory set (Z).

Step 77

Please read the Guide to Wall Mounting & Fixings on the last page before excuting this step.

Z		x1set

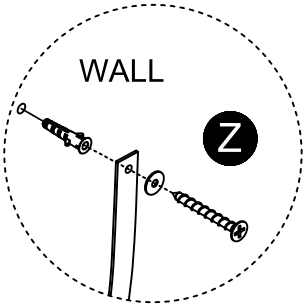

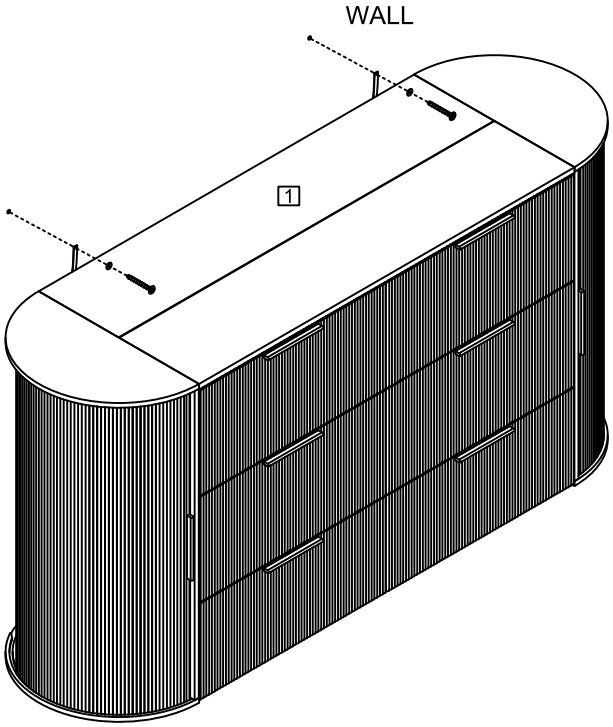

The unit is floor standing, but it is recommended that the unit is secured to the wall.

1.Move the unit into desired position.

2.Mark the wall with a suitable scribe the position of the fixing holes.

Warning:
Before driling,check wall for hidden pipes and cables.

3.Drill holes and insert wall plug.

4.Attach strap(Z) to the wall.

Assembly Instructions

Step 78

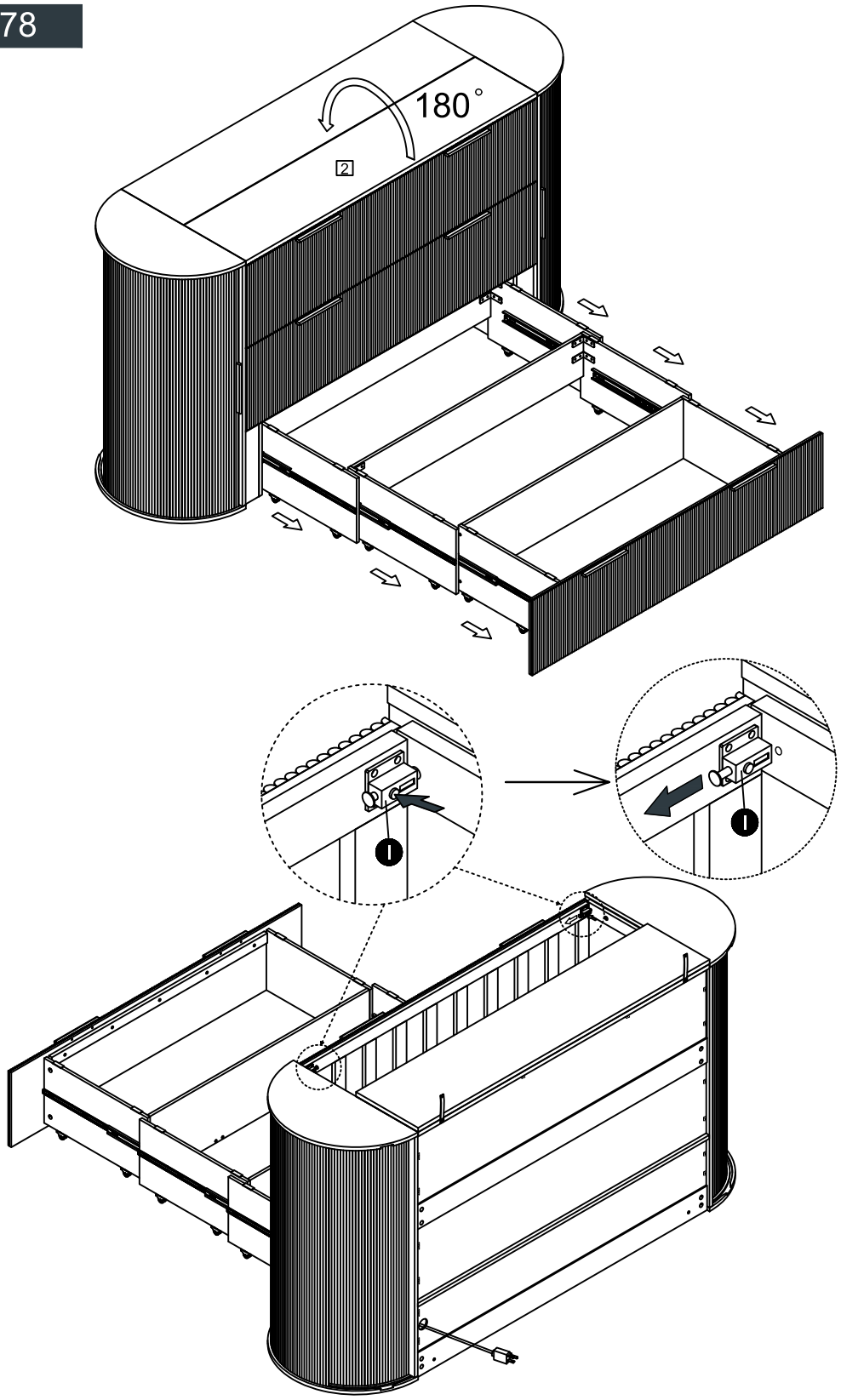

Rotate panel (2) 180° counterclockwise and pull all drawers fully open.
Press the button on hardware (I) to release the latch as shown.

Assembly Instructions

Step 79

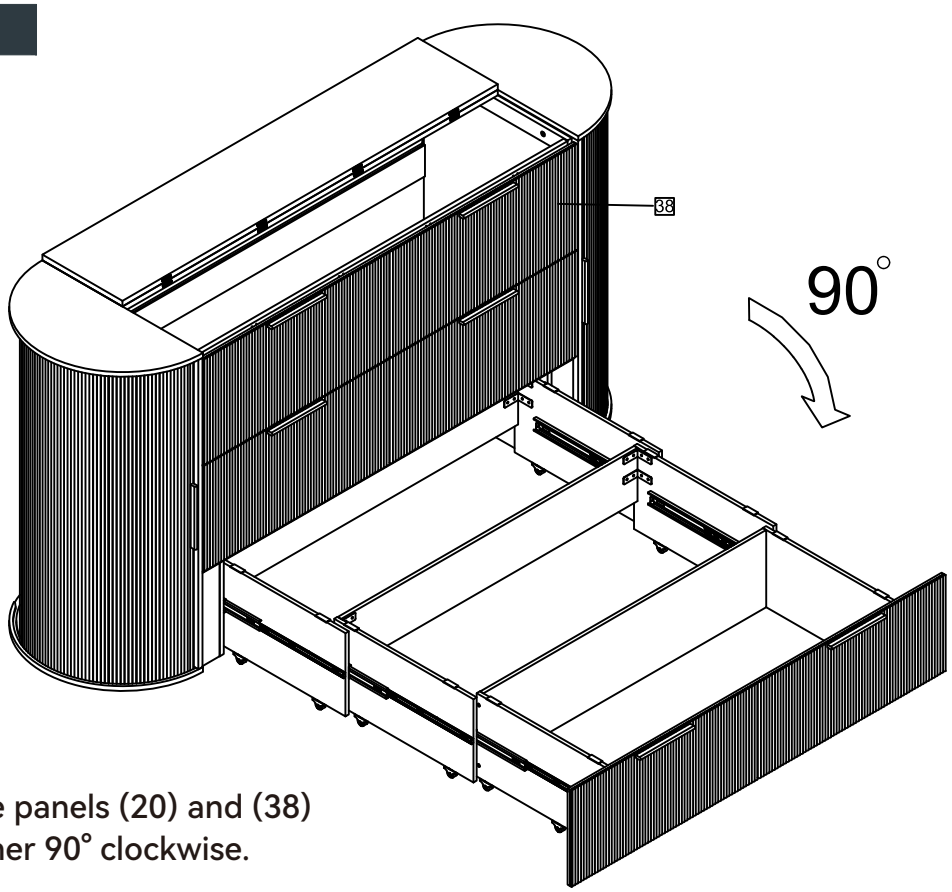

Rotate panels (20) and (38) together 90° clockwise.

Step 80

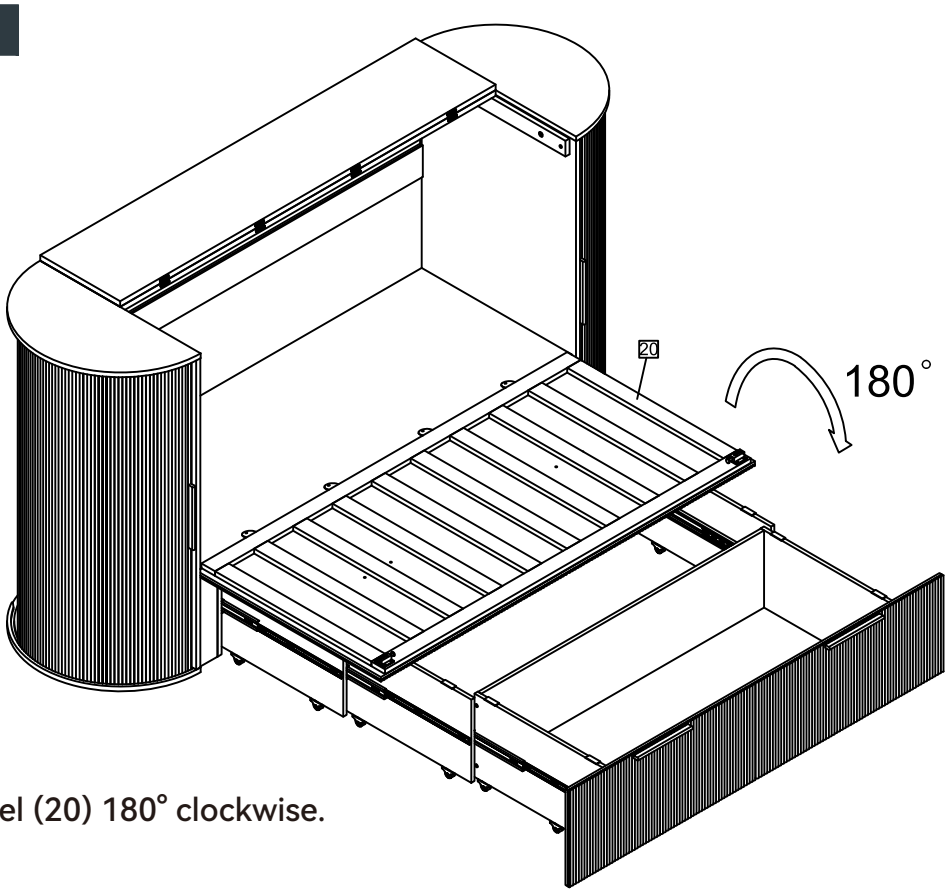

Rotate panel (20) 180° clockwise.

Assembly Instructions

Step 81

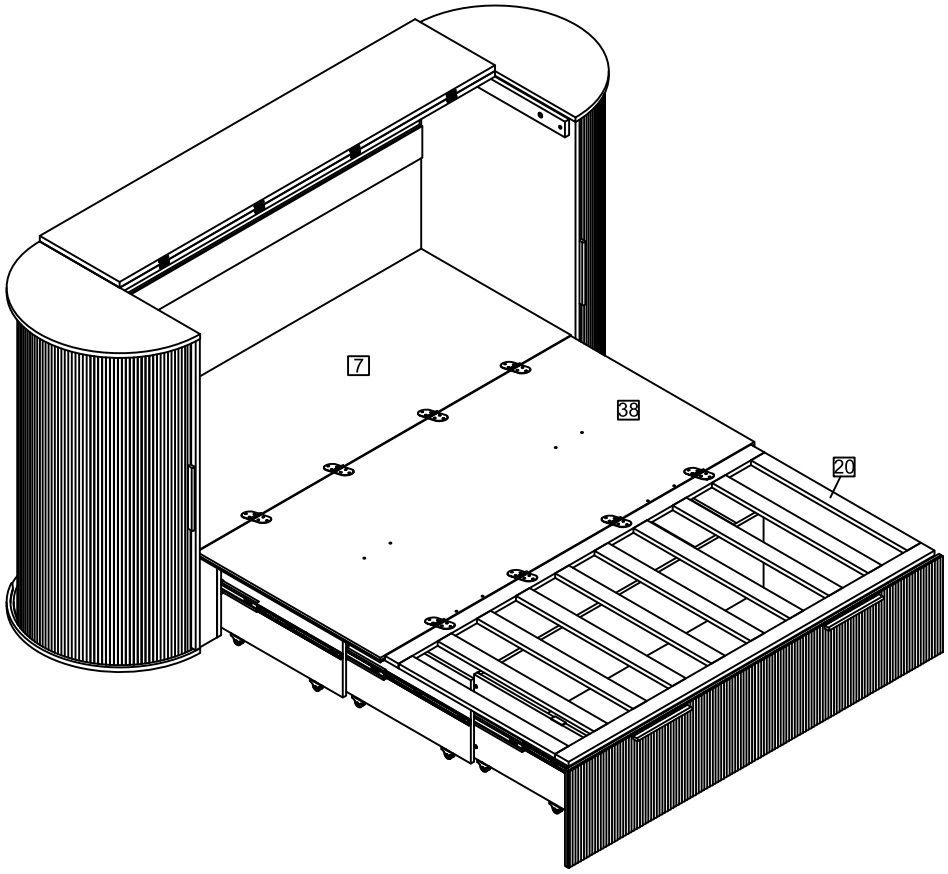

Assembly is complete as shown.

A Guide to Wall Mounting & Fixings

Important note:

If plastic wall plugs (rawl plugs) are supplied with your product, e.g.:



- these are only suitable for use in masonry walls.

If you are in any doubt about the correct wall plugs for your wall, seek professional advice.

Failure of the product due to using the incorrect fixings is the responsibility of the installer.

Important: when drilling into walls always check that there are no hidden wires or pipes etc.

Make sure that the screws and wall plugs being used are suitable for **supporting your unit. Consult a qualified tradesperson if you** are unsure.

Hints:

1: General rule: always use a larger screw and wall plug if you are not sure.
2: Ensure you use the recommended drill bit to match the wall plug and hole size.
3: Ensure you drill the hole horizontally; do not force the drill or enlarge the hole.
4: Take extra care when drilling high walls, ceilings and ceramic tiles. Ensure wall plugs are inserted beyond the thickness of the ceramic tiles to avoid the tiles splitting or cracking.
5: Ensure wall plugs are well fitted and are a tight fit in the drilled hole.

Types of walls

You can use one of the following types of wall plug if your walls are made of brick, breeze block, concrete, stone or wood.

No.1 "General Purpose" wall plug

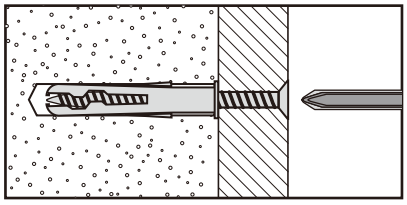

Generally aerated blocks should not be used to support heavy loads, use a specialist fitting in this case. For light loads, general purpose wall plugs can be used.

No.2 " Plasterboard" wall plug

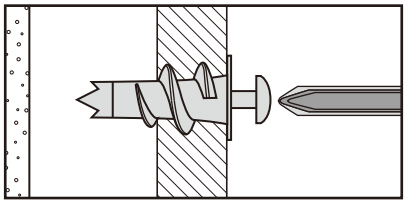

For use when attaching light loads onto plasterboard partitions.

No.3 "Cavity Fixing" wall plug

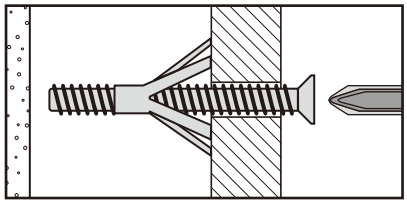

For use with plasterboard partitions or hollow wooden doors.

No.4 " Cavity Fixing – Heavy Duty" wall plug

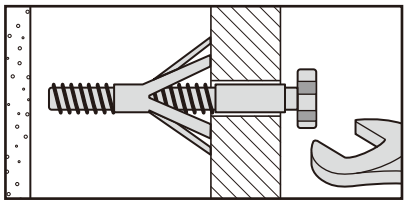

For use when fitting or supporting heavy loads such as shelving, wall cabinets and coat racks.

No.5 "Hammer Fixing" wall plug

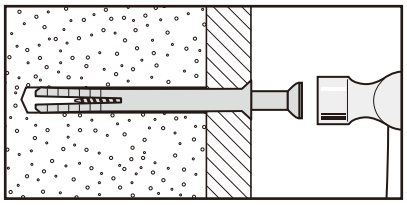

For use with walls stuck with plasterboard. The hammer fixing allows it to be fixed to the wall rather than the plasterboard. Always check the fixing is secure to the retaining wall.

No.6 " Shield Anchor" wall plug – heavy loads

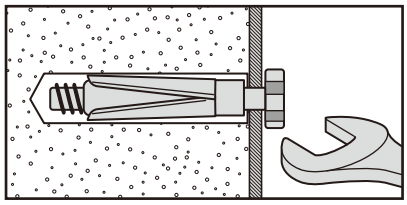

For use with heavier loads such as TV and HiFi speakers and satellite dishes etc.

Care & Maintenance

Safety: always check the fitting and location to ensure your safety in and around the home.

Fitting: from time to time check the fitting to ensure the wall plugs or screws do not become loose.