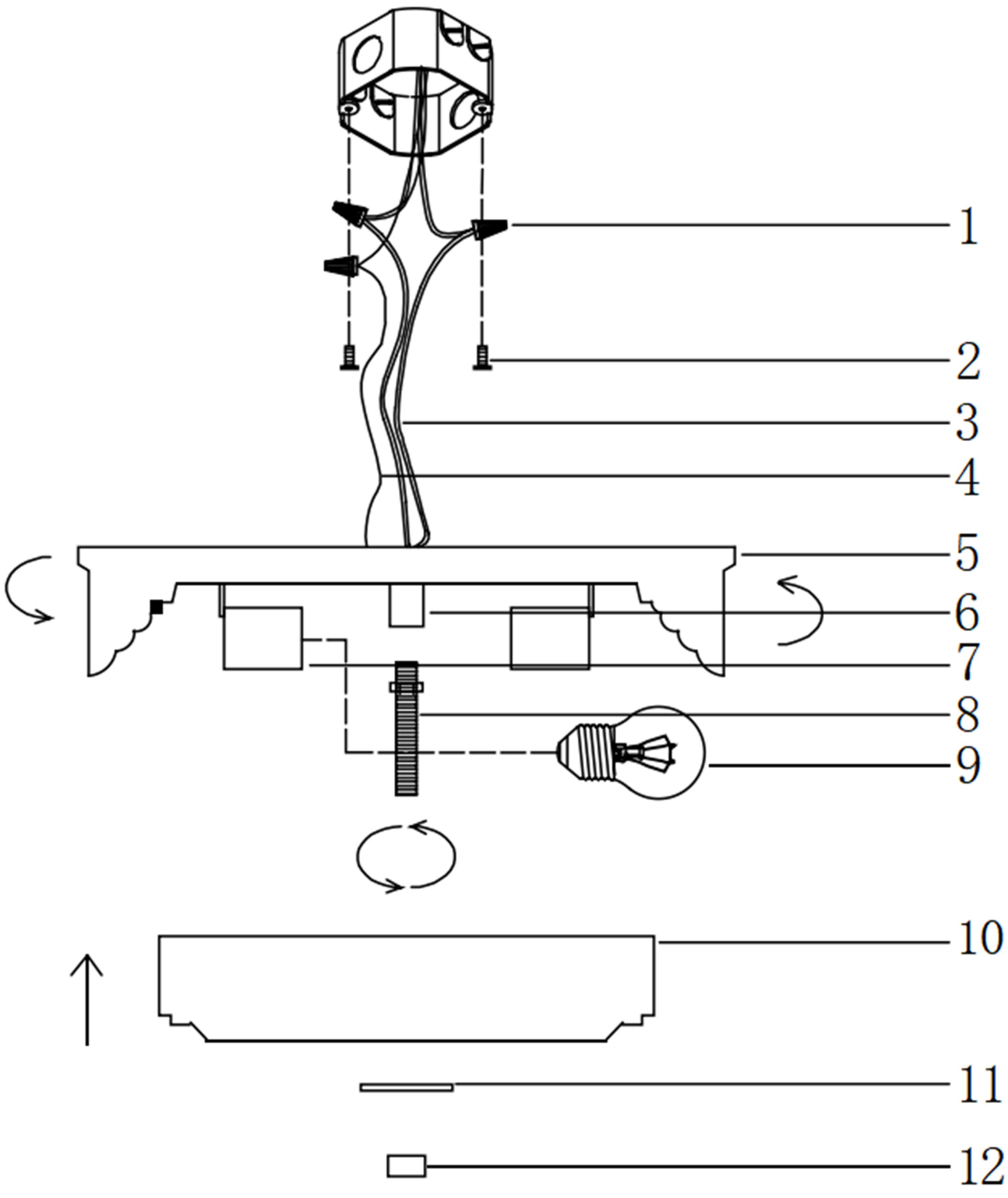

Installation Steps:

Step 1: Fix the screws (2) on the junction box.
Step 2: Connect the power cord (3) of the lamp body to the external power cord with the wiring cap (1), and the ground wire (4) to the external ground wire with the wiring cap (1).
Step 3: Fix the light panel (5) with the screws (2).
Step 4: Attach the full thread(8) to the connector (6).
Step 5: Attach the bulb (not included) (9) to the light head (7).
Step 6: Pass glass shade(10) and decorative cover (11) through full thread (8) and secure with decorative ring (12).

Accessories:

Part 2: Mounting Screw*2	
Part 1: Wiring cap*3	
Part 8: Full Thread*1	
Part 10: Glass Shade*1	
Part 11: decorative cover*1	
Part 12: Decorative ring*1	

Notice: This light fixture should be installed in accordance with all applicable, local installation codes, and by a person familiar with the construction and operation of it, as well as the hazards involved. Inspect items and contents carefully. If any damage or defect is found, do not install it.