# 322#

## Sideboard

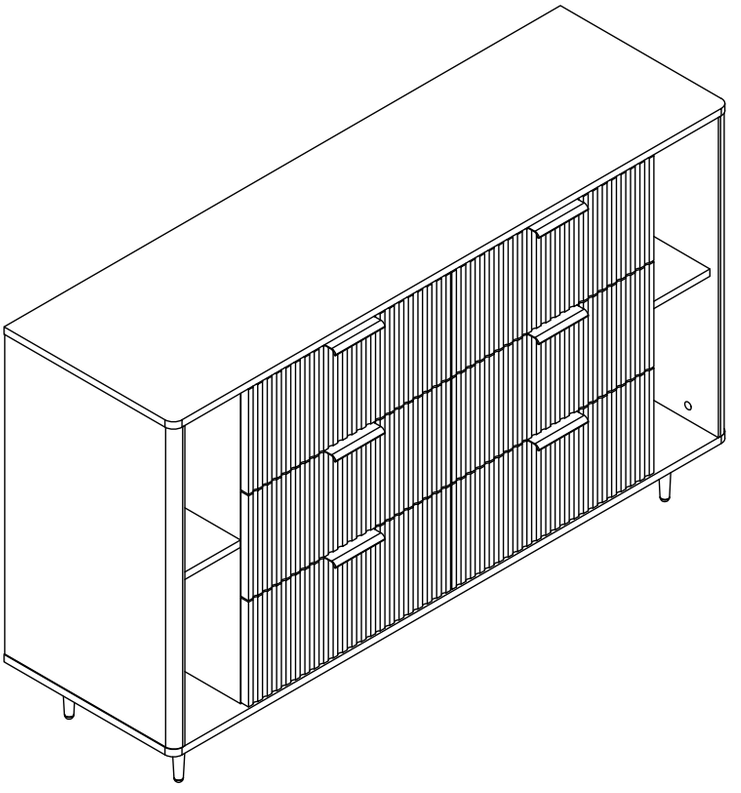

L1300*W400*H800MM

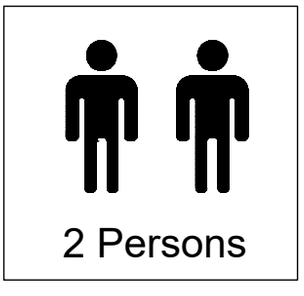


Cabinet Hinge Adjustment Video

Drawer Glide Adjustment Video

Assembly Guide Video

Installation Instructions

Notes:Don't tighten screws completely at first,just in case parts were assembled wrong and need disassemble.Tighten screws at last when all parts are put together.

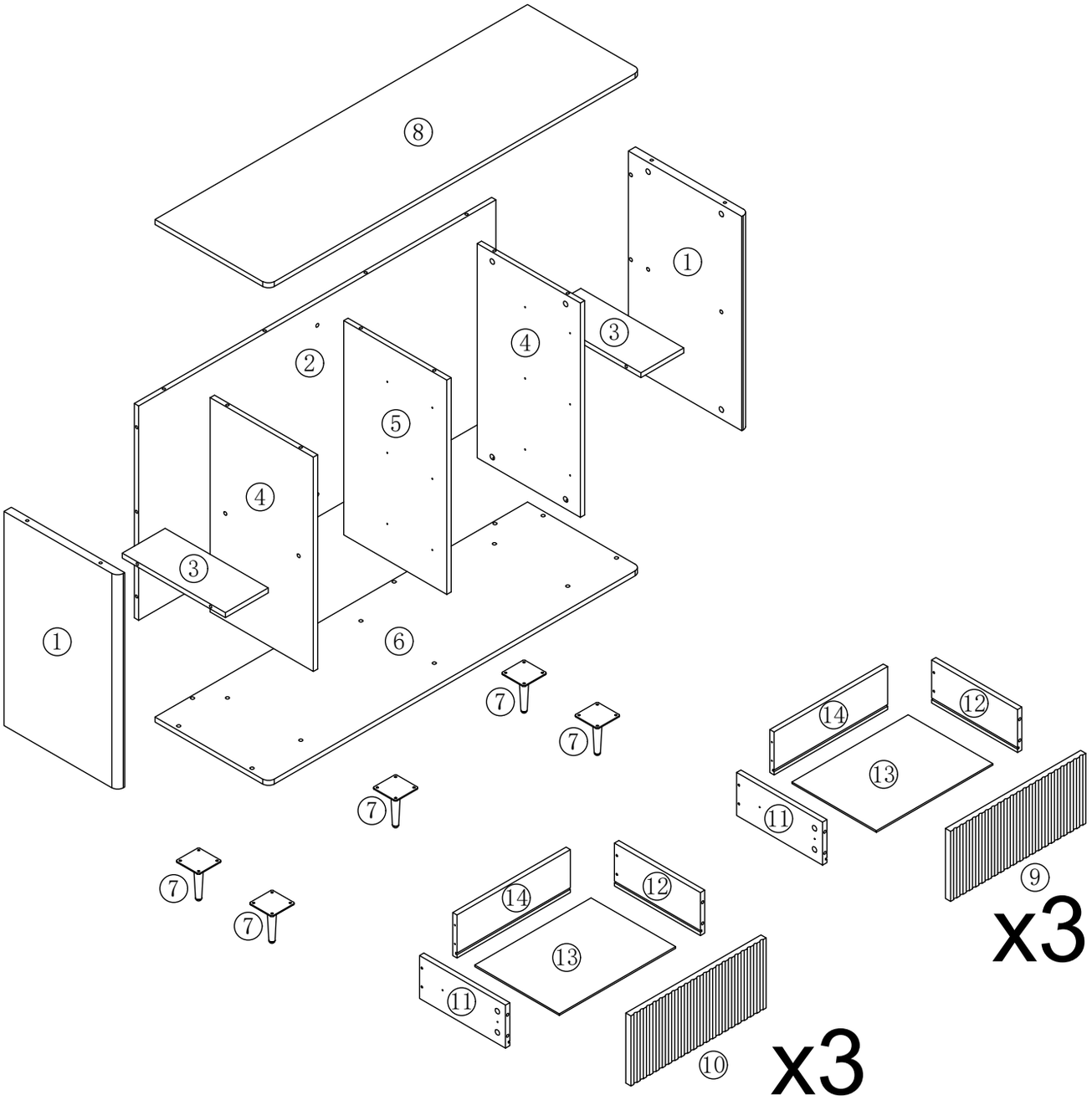


Disassembly and installation of accessories

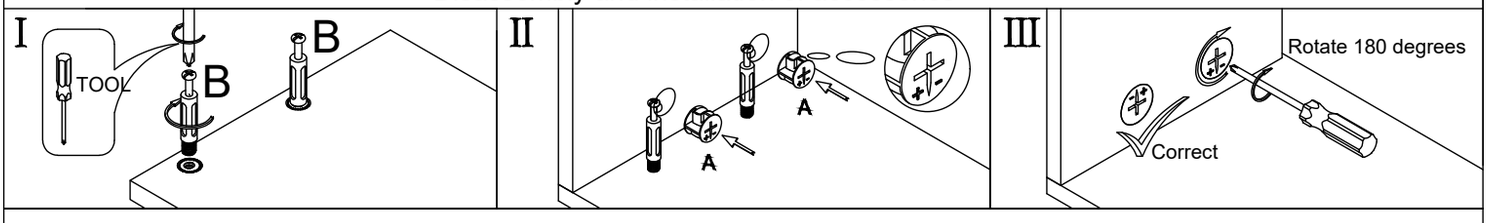


| | | | | | | |
|---|---|---|---|---|---|---|
| A 68PCS | B 68PCS | C 12PCS | D 80PCS | E 6PCS | F 24PCS | |
|  |  |  |  | 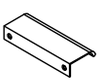 |  |  |
| ϕ15*10mm | ϕ6*28mm | 10" | ϕ3.5*14mm | 96# | ϕ3.5*40mm | Tools Recommended |

1

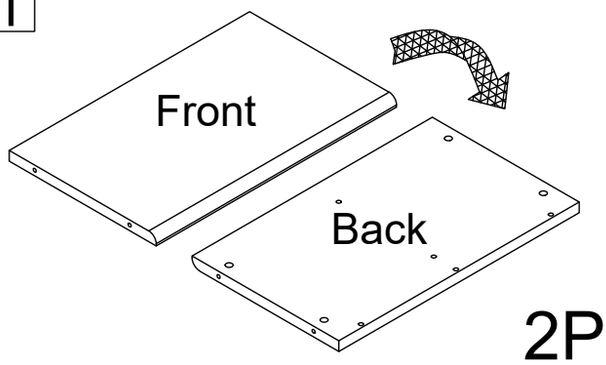


2PCS

2

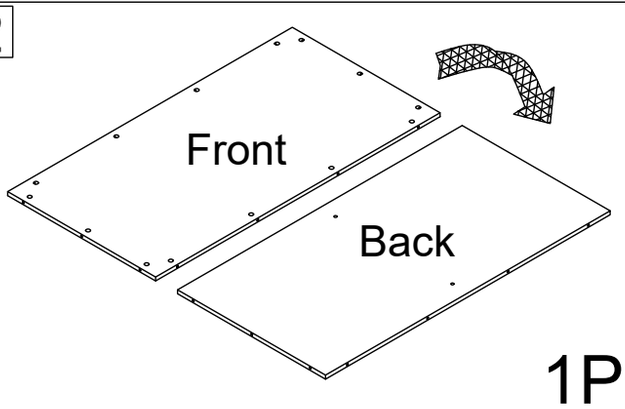


1PC

3

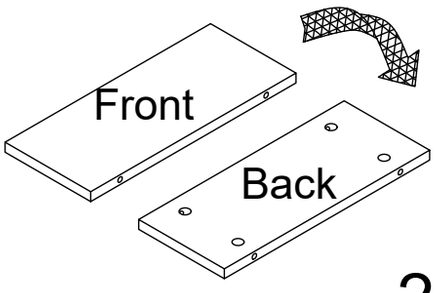


2PCS

4

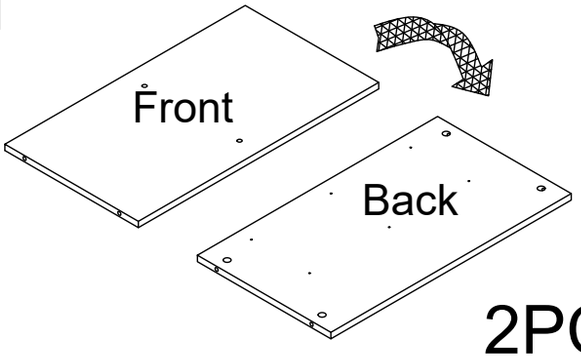


2PCS

5

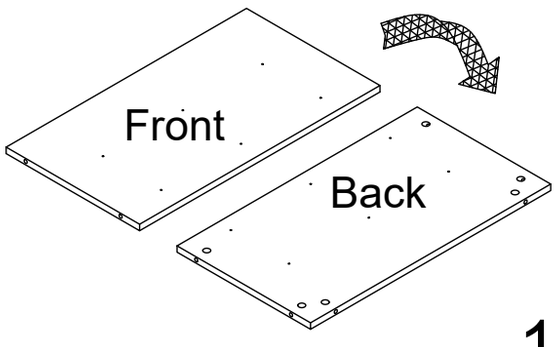


1PC

6

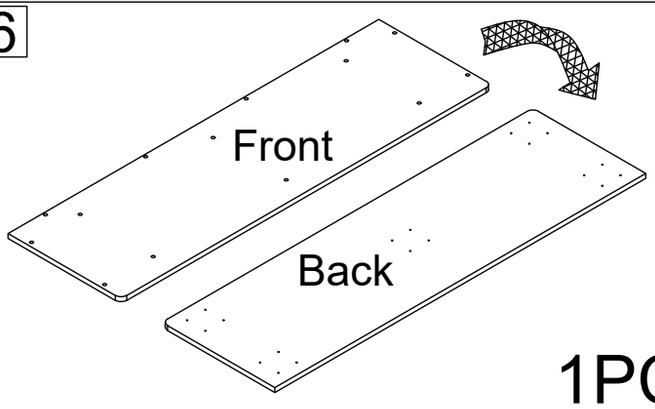


1PC

7

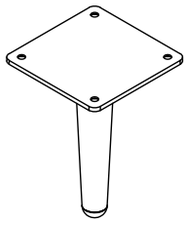

5PCS

8

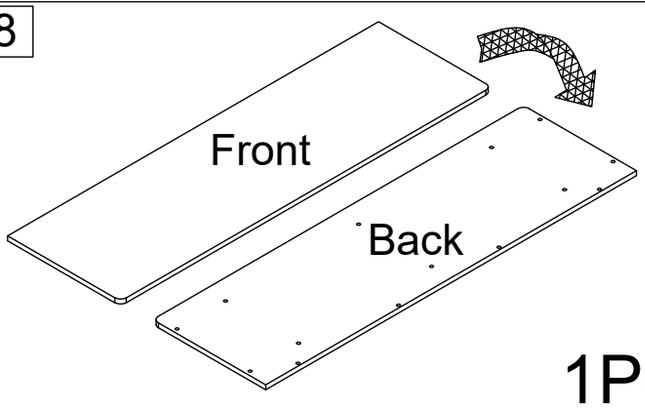


1PC

9

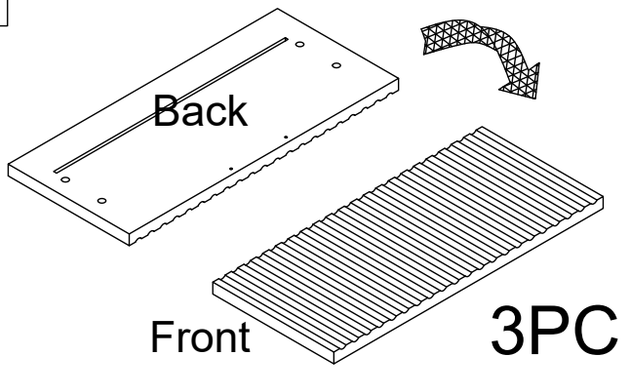


3PCS

10

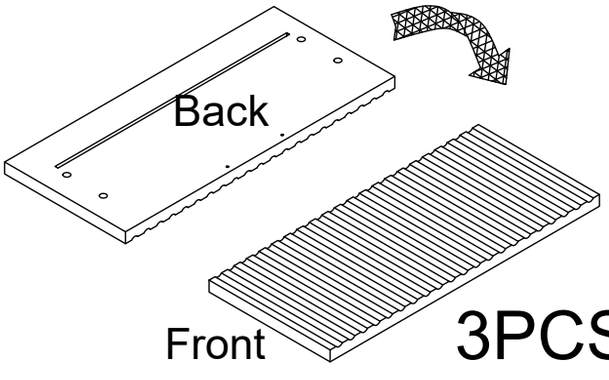


3PCS

11

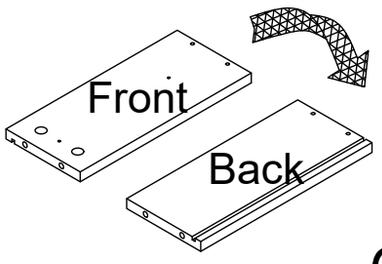


6PCS

12

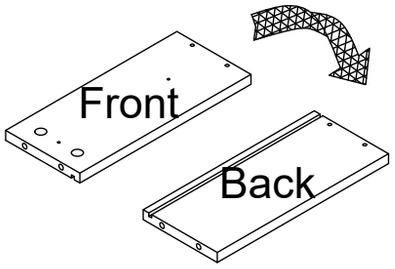


6PCS

13

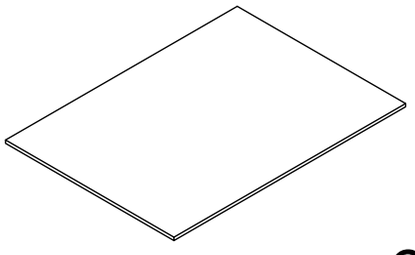

6PCS

14

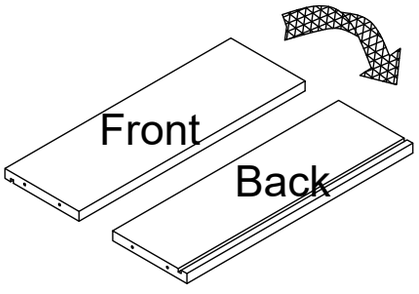


6PCS

1

C 12PCS



10"

Cx4

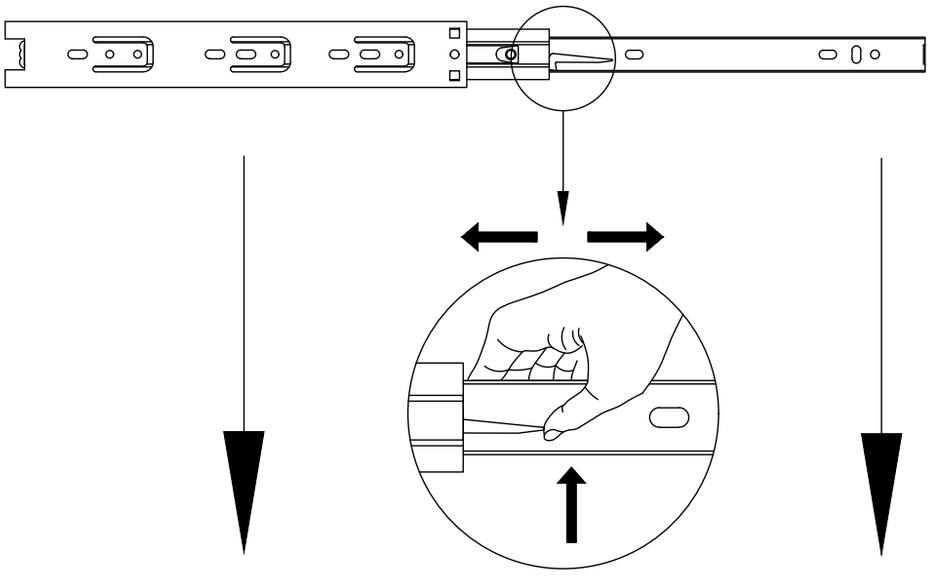

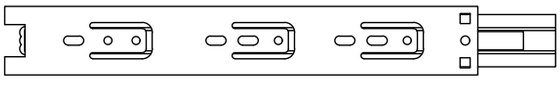

C1



C2

2

| B | 68PCS |
|---|---|
|  | |
| ϕ6*28mm | |

Bx2

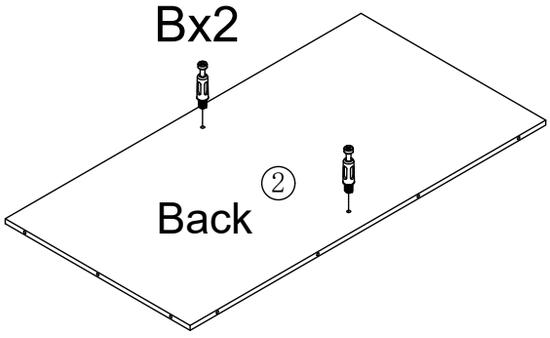


Bx5

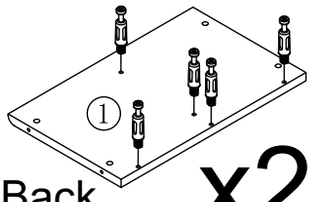


x2

Bx14

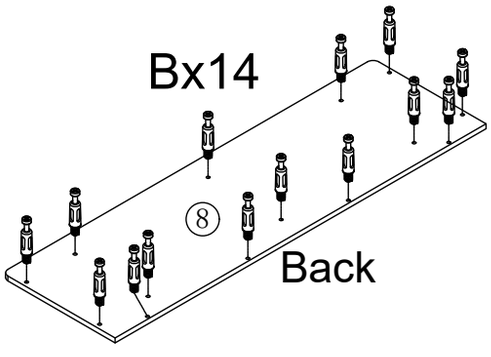


Bx14

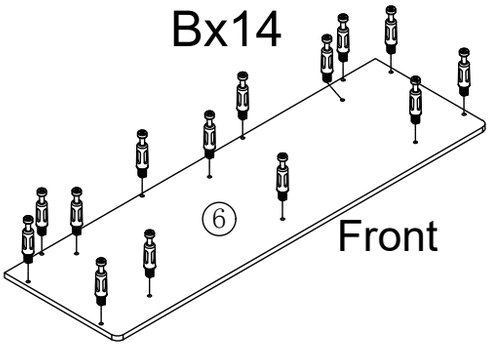


Bx2

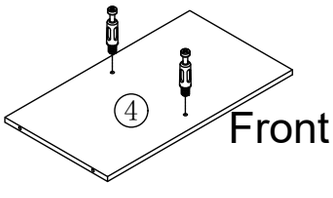


x2

Bx4

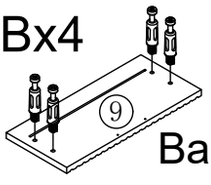


x3

Bx4

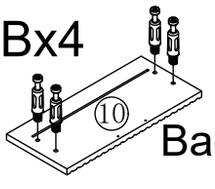


x3

3

| C1 | 12PCS |
|---|---|
|  | |
| 10" | |
| D | 24PCS |
|  | |
| Ø3.5*14 | |




4

| A | 6PCS |
|---|---|
|  | |
| ø15*10mm | |

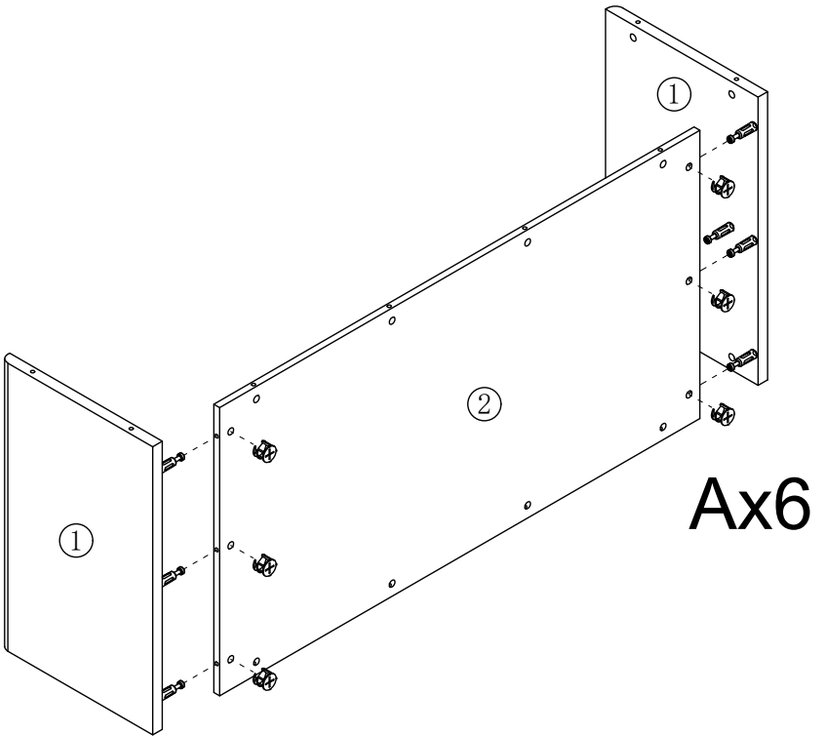

5

| A | 4PCS |
|---|---|
|  | |
| ϕ15*10mm | |

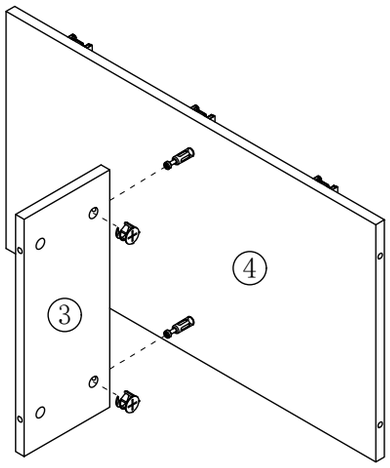


Ax2

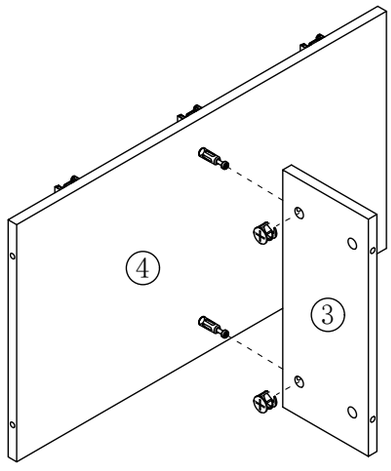


Ax2

6

| A | 4PCS |
|---|---|
|  | |
| ϕ15*10mm | |

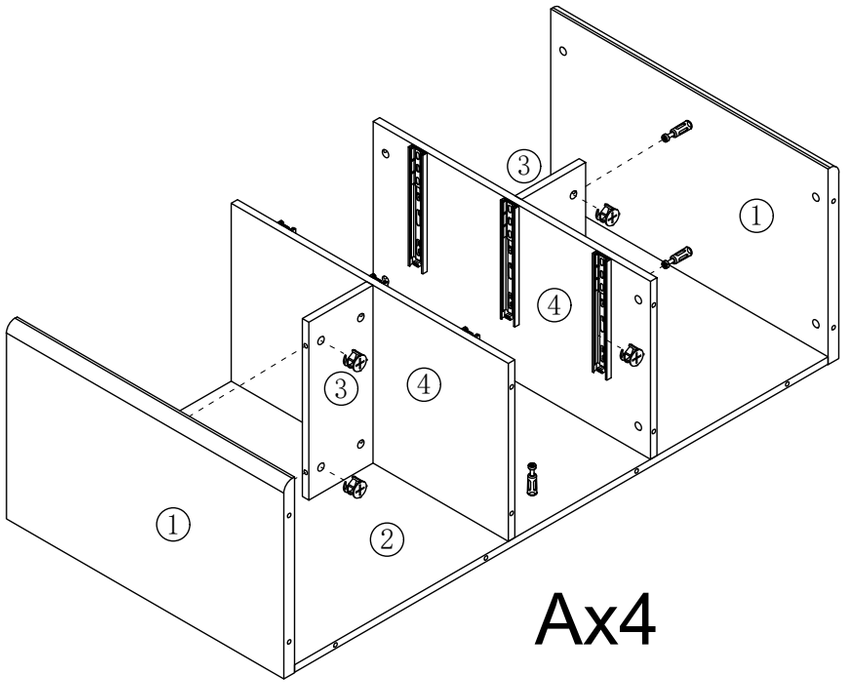


Ax4

7

| A | 2PCS |
|---|---|
|  | |
| ø15*10mm | |

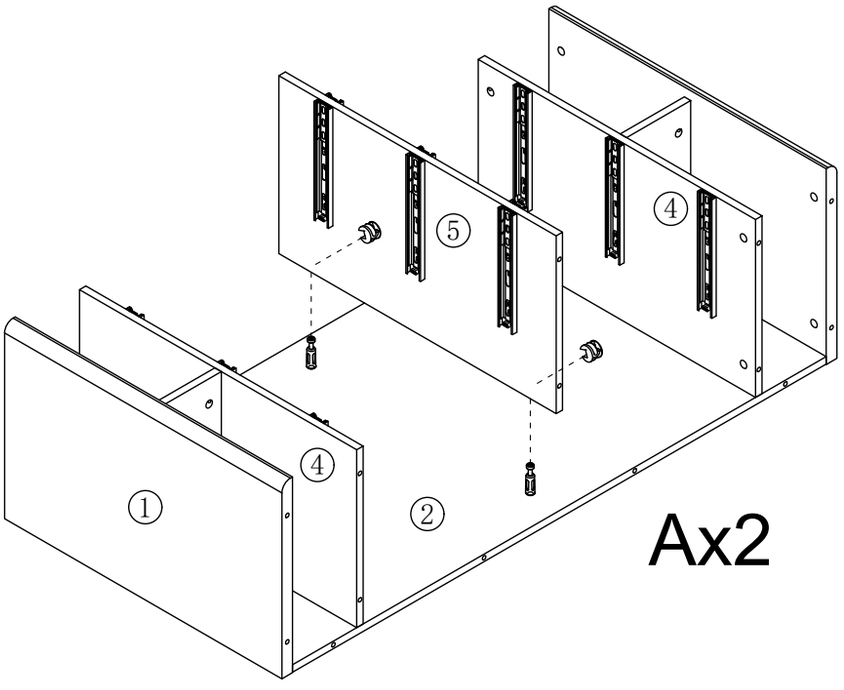


Ax2

8

| D | 20PCS |
|---|---|
| 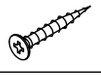 | |
| Ø3.5*14 | |

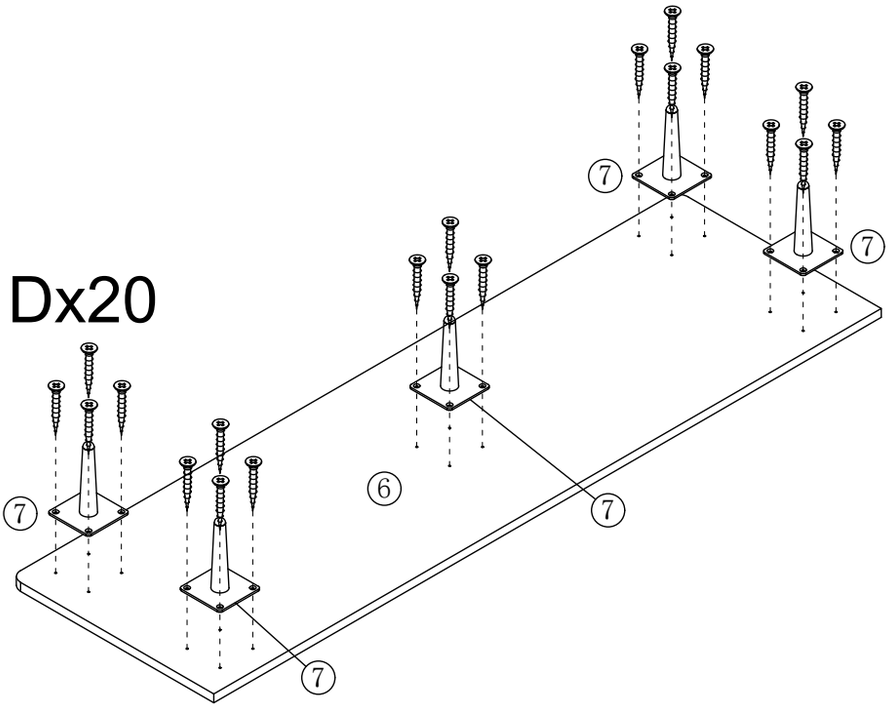


Dx20

9

| A | 14PCS |
|---|---|
|  | |
| ϕ15*10mm | |

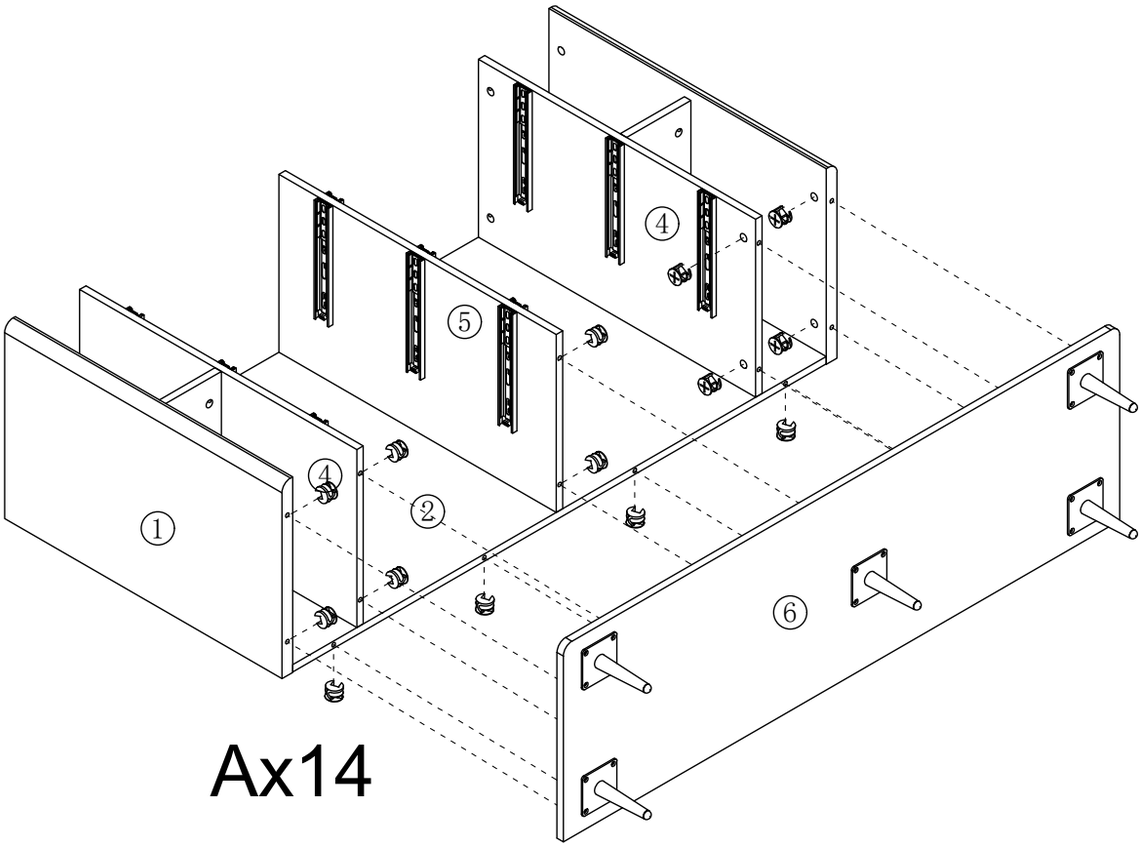


Ax14

10

| A | 14PCS |
|---|---|
|  | |
| ϕ15*10mm | |

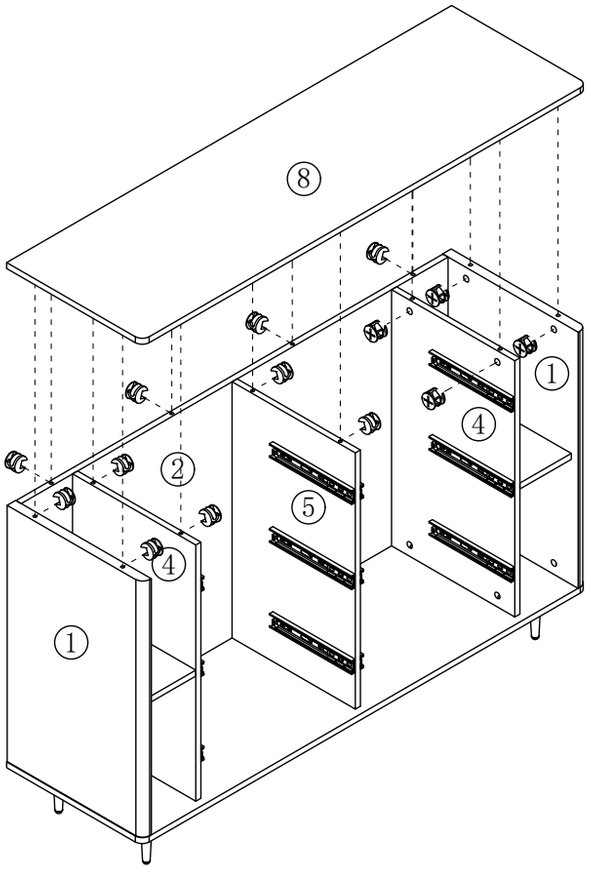


Ax14

11

| | |
|---|---|
| A | 24PCS |
|  | |
| ϕ15*10mm | |
| C2 | 6PCS |
|  | |
| 10" | |
| D | 36PCS |
|  | |
| ϕ3.5*14 | |
| E | 6PCS |
| 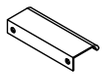 | |
| 96# | |
| F | 24PCS |
|  | |
| ϕ3.5*40 | |

Ax4

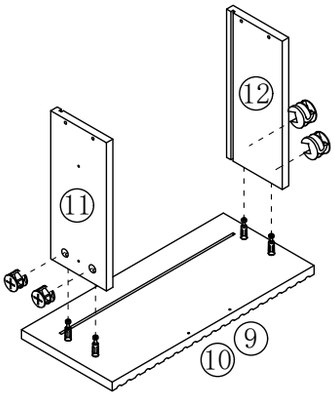


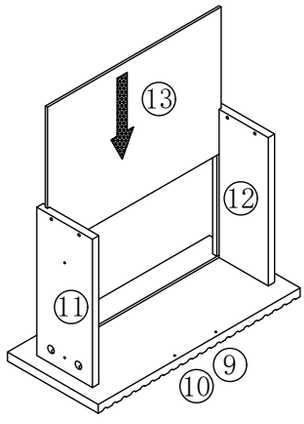


Fx4

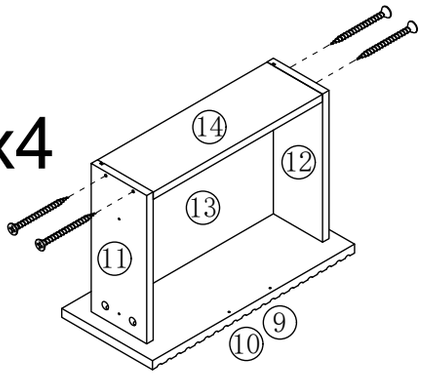


E

Dx2

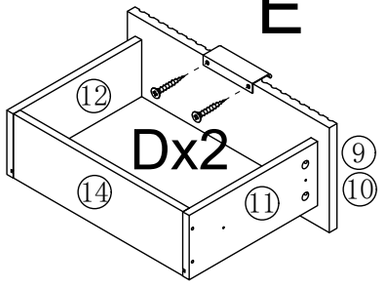


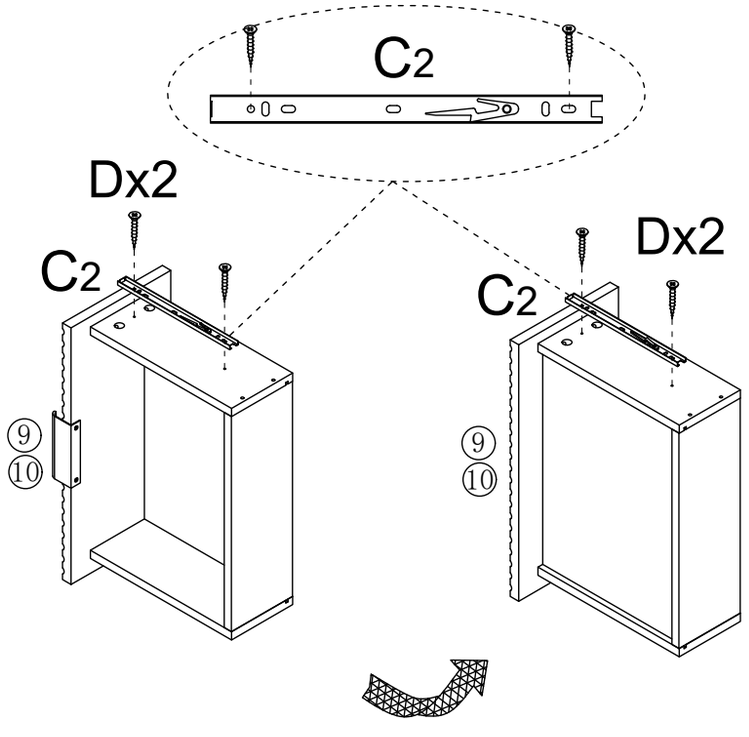


x6

12

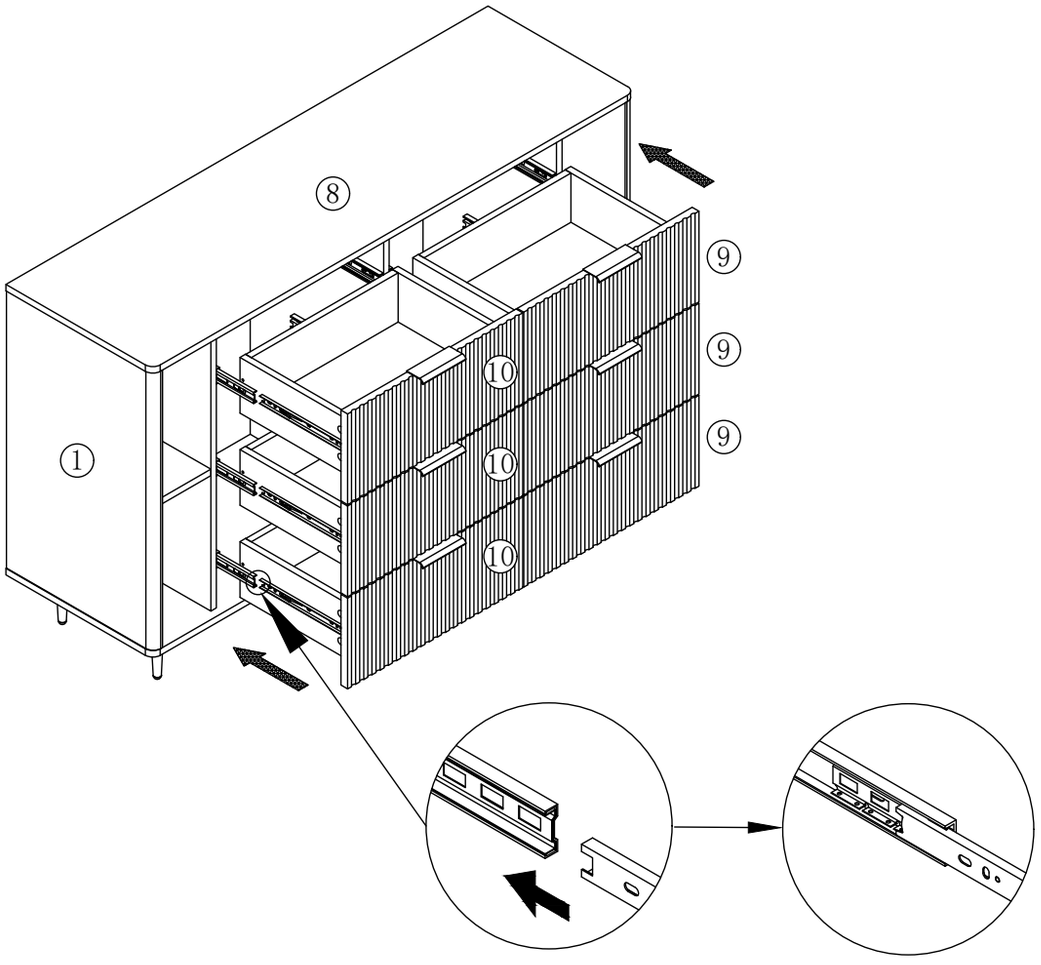


13

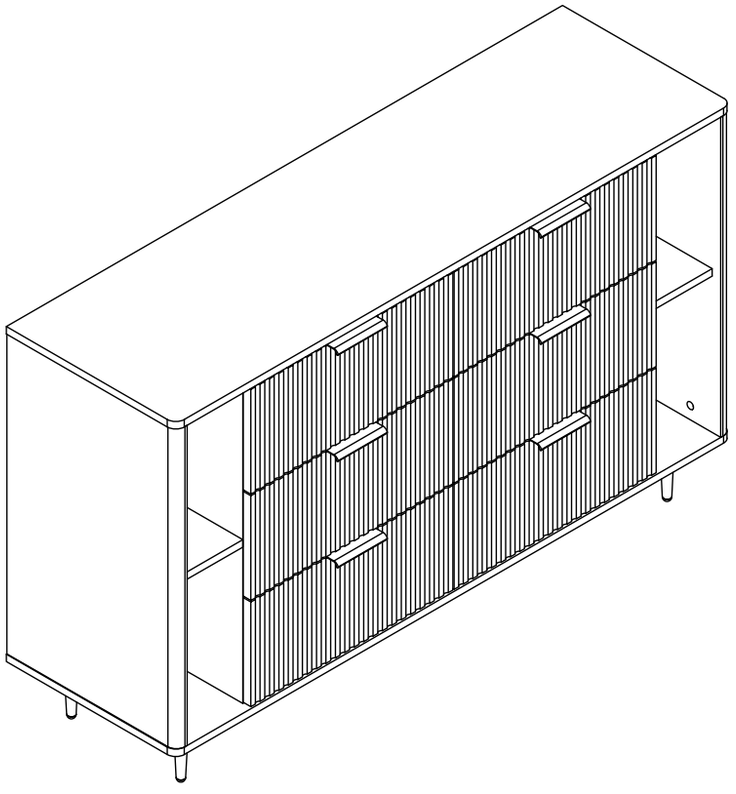

OK