ASSEMBLY INSTRUCTION

(1) ×1

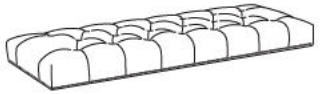

(2) ×4

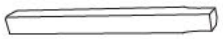

(3) ×8

M8×60mm

(4) ×8

M8

(5) ×8

M8

(6) ×1

①

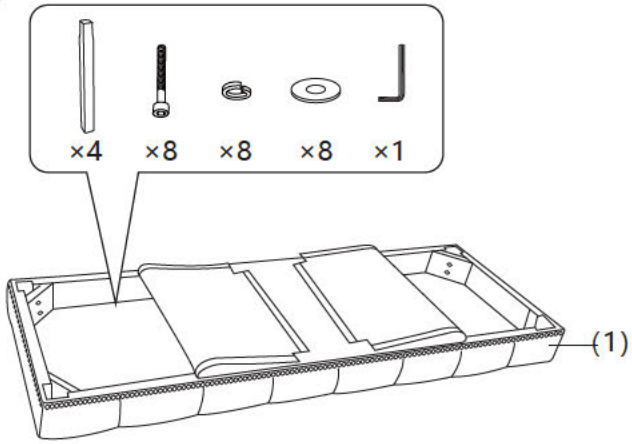

②

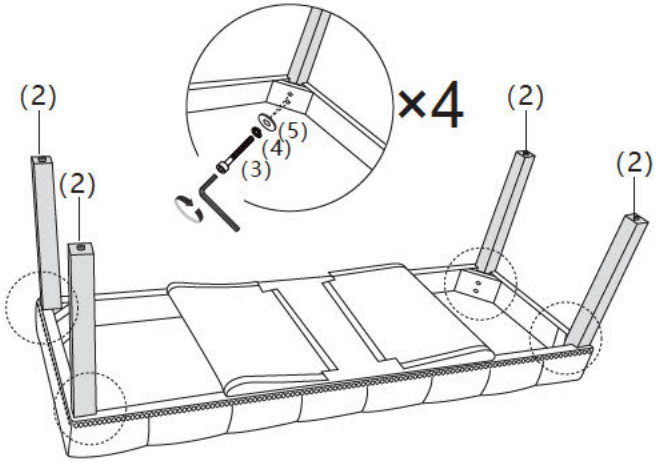

③

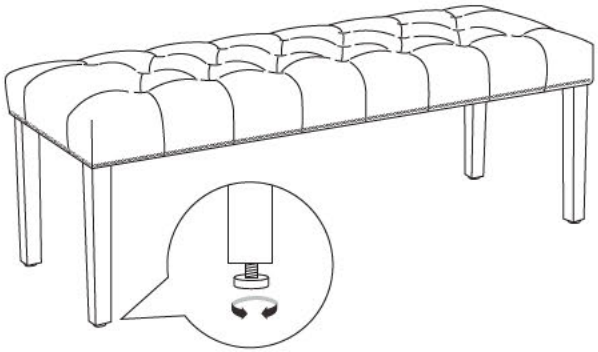

Rotate the studs to stabilize the footstool
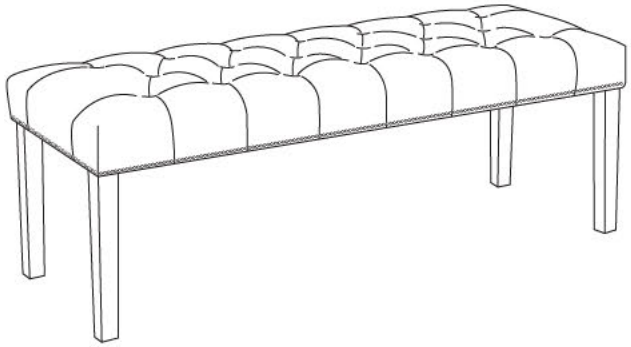
④