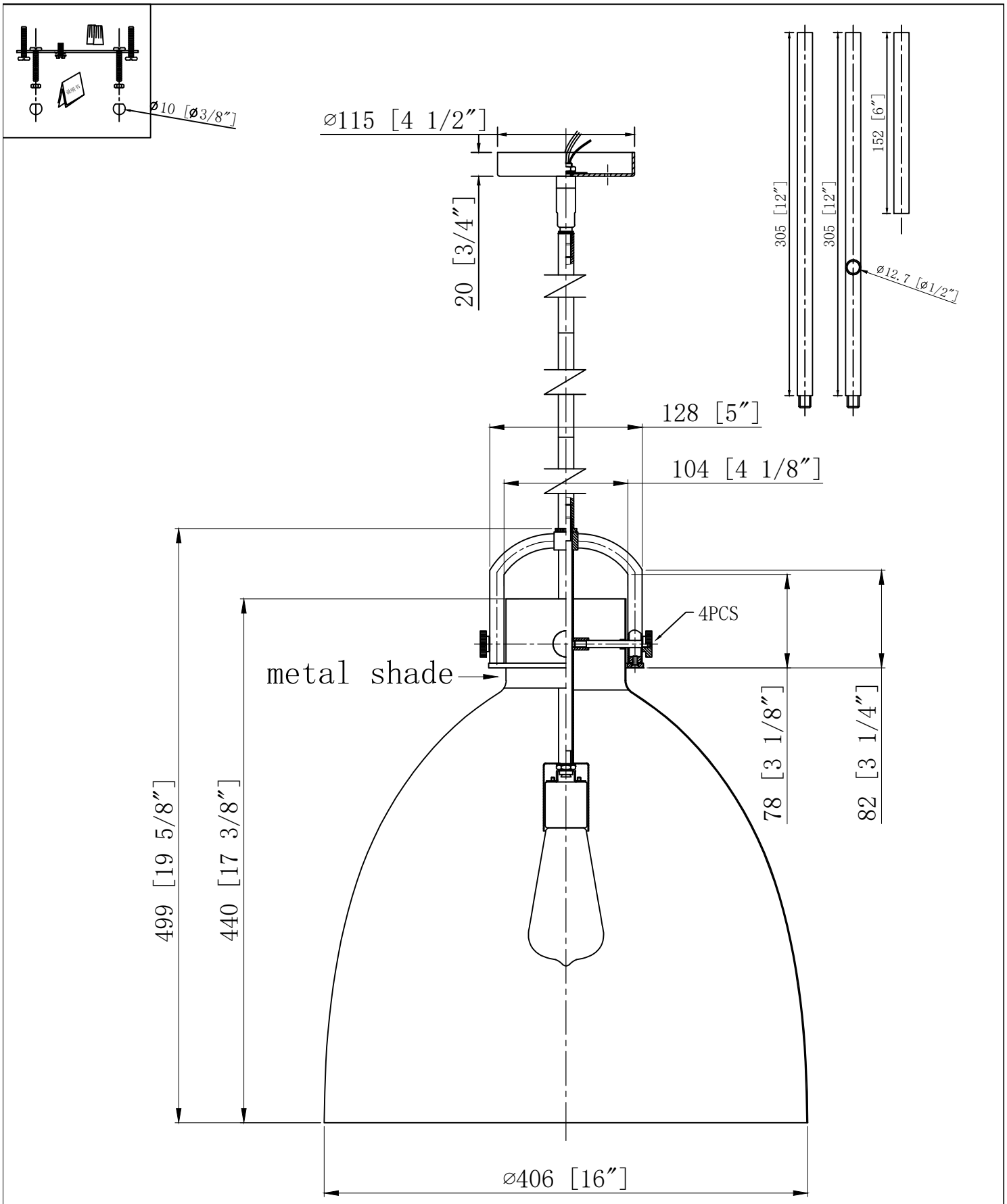

INNOVATIONS LIGHTING
DESIGN COPYRIGHT - 12/16/2020
ALL RIGHTS RESERVED AND MAY
NOT BE DUPLICATED WITHOUT OUR
WRITTEN PERMISSION

ITEM:712-1S-16