Bathroom cabinet

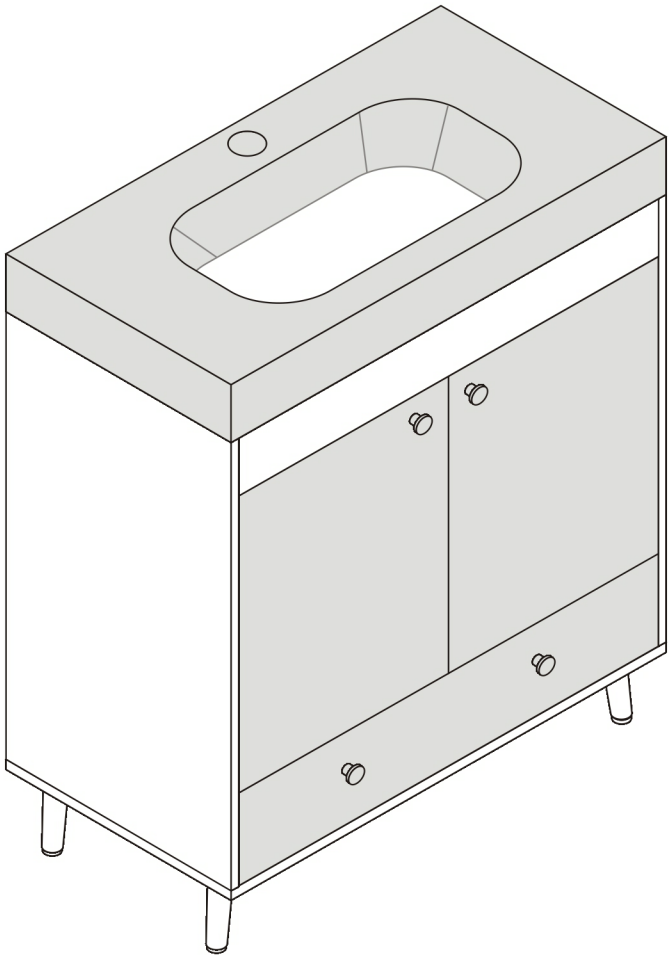

2 Persons

L752*W455*H593MM

Installation Instructions

Notes: Don't tighten screws completely at first, just in case parts were assembled wrongly and need disassemble. Tighten screws at last when all parts are put together.

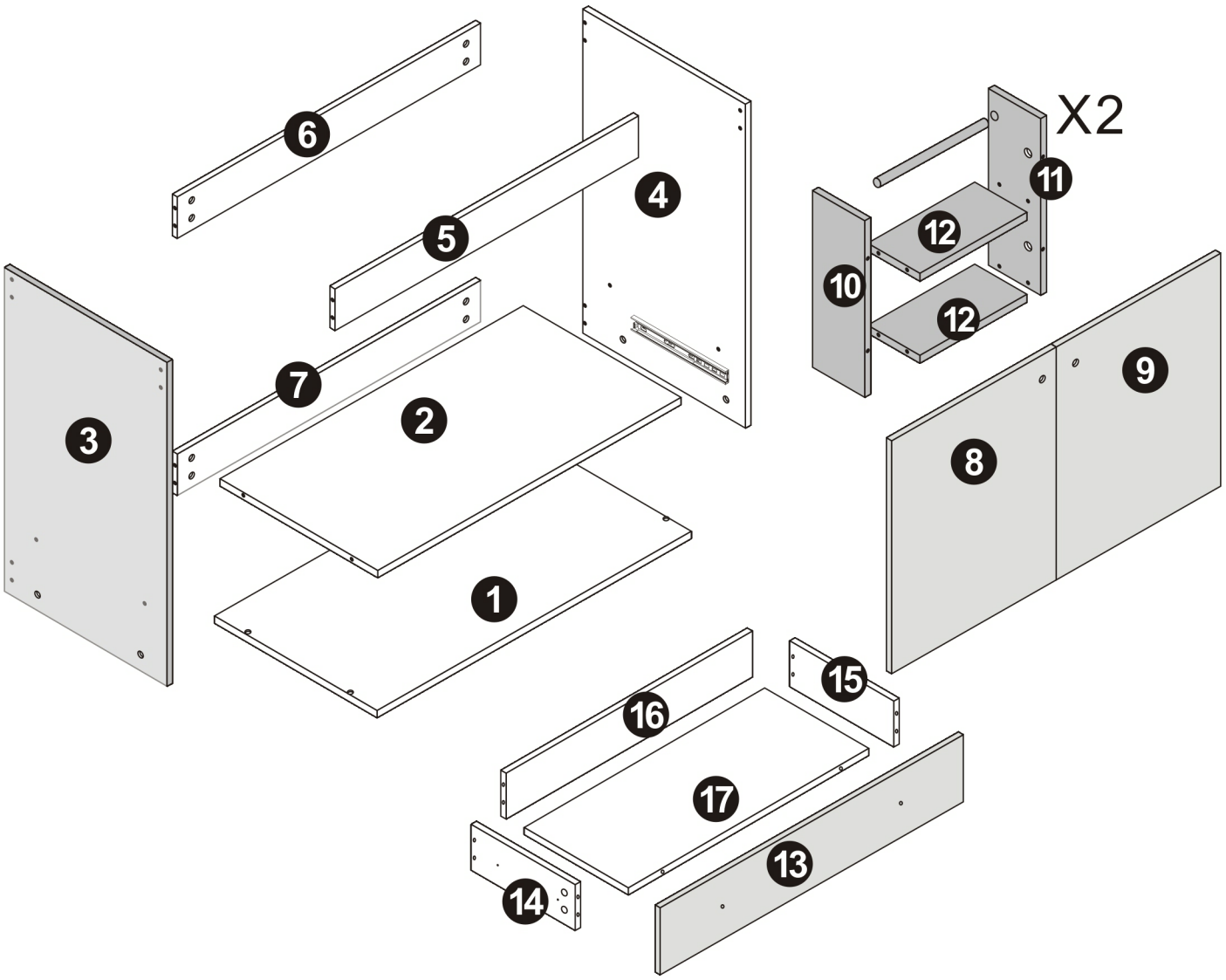

Disassembly and installation of accessories

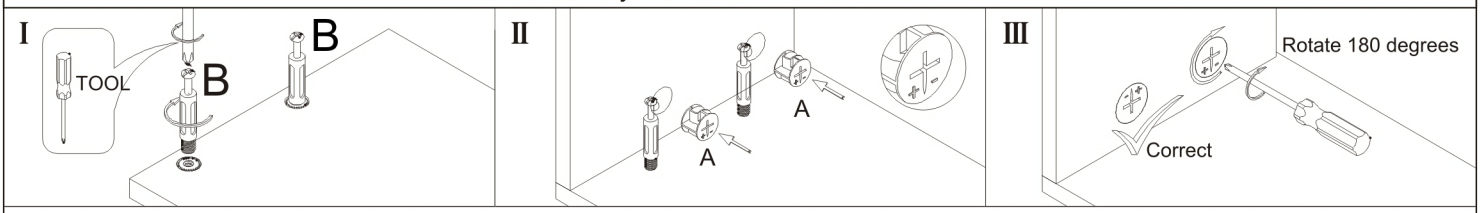

A	52PCS	B	52PCS	C	64PCS	D	10PCS	E	4PCS	F	4PCS	G	4PCS	H	4PCS
15*10mm		6*28mm		3.5*14mm		3.5*35mm		4*20		Handles		Sponge Mat		9.8cm	

I	2PCS	J	2PCS	K	1PCS	L	4PCS	M	4PCS
Expansion screw		Corner code		Three-section Rail		Hardware Feet		Mid bend	

1

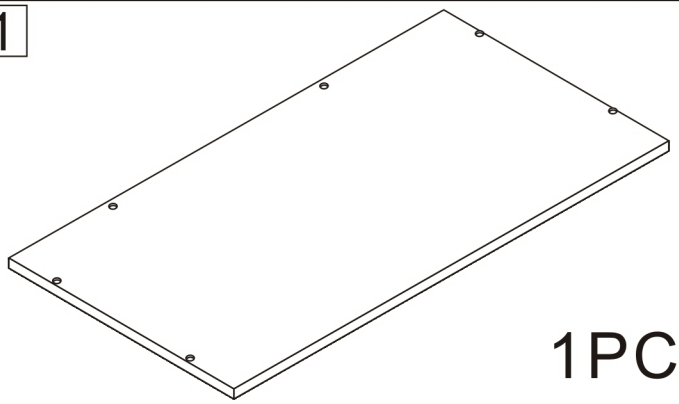

1PC

2

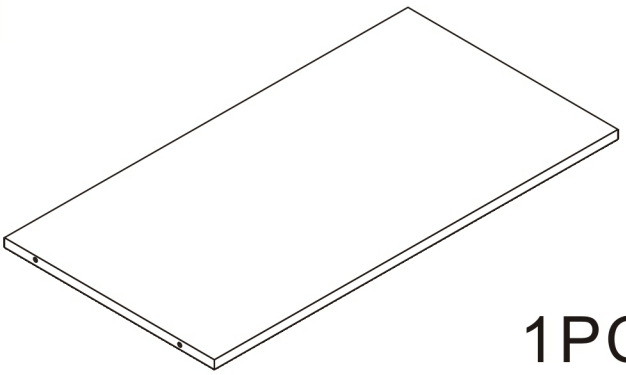

1PC

3

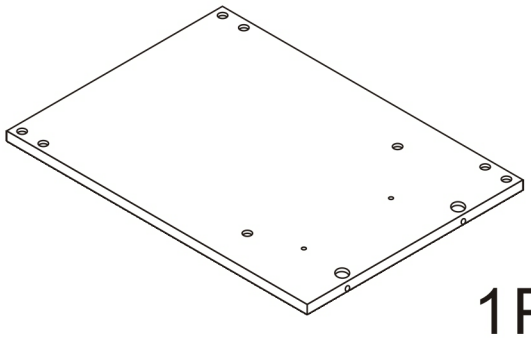

1PC

4

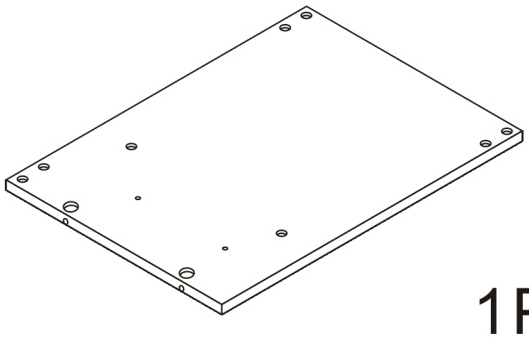

1PC

5

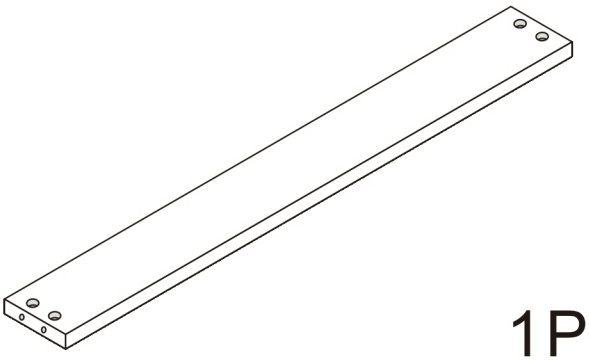

1PC

6

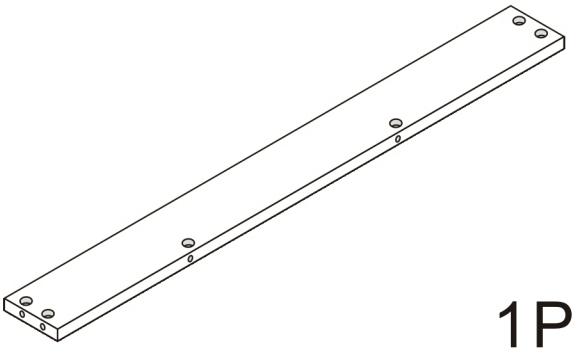

1PC

7

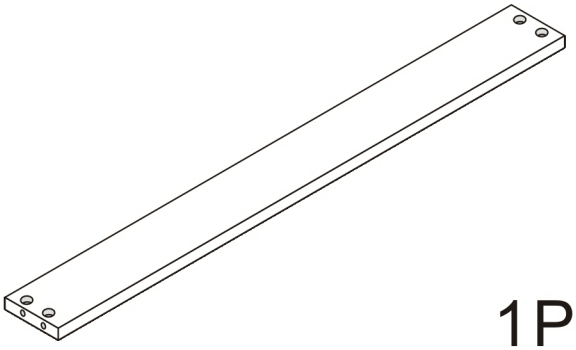

1PC

8

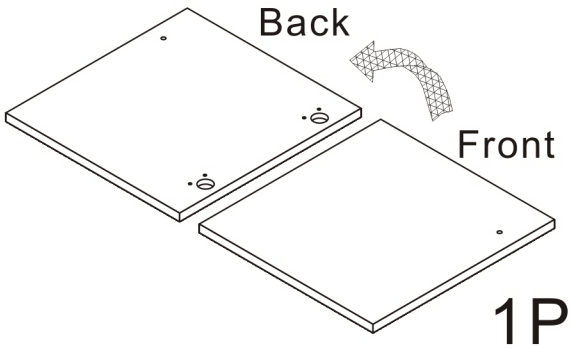

1PC

9

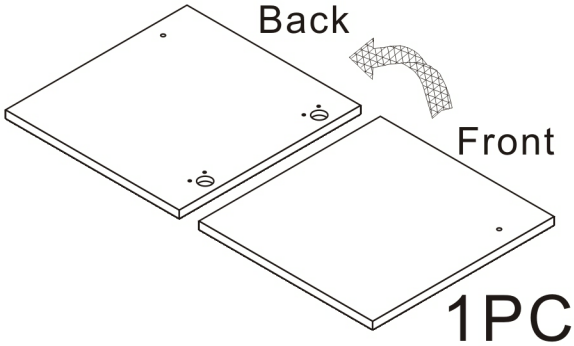

1PCS

10

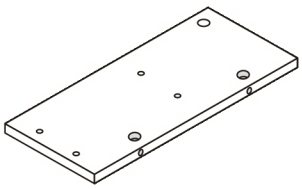

4PCS

11

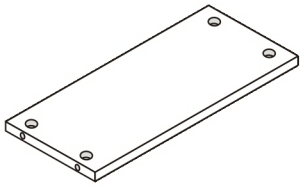

4PCS

12

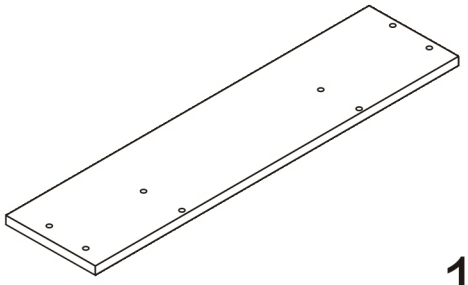

1PC

13

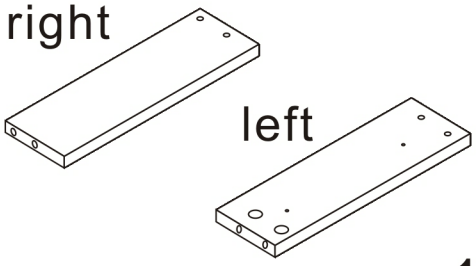

1PC

14

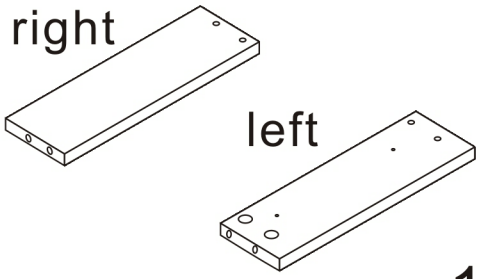

1PC

15

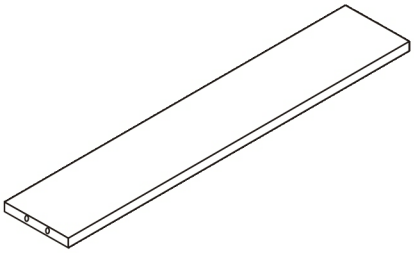

1PC

16

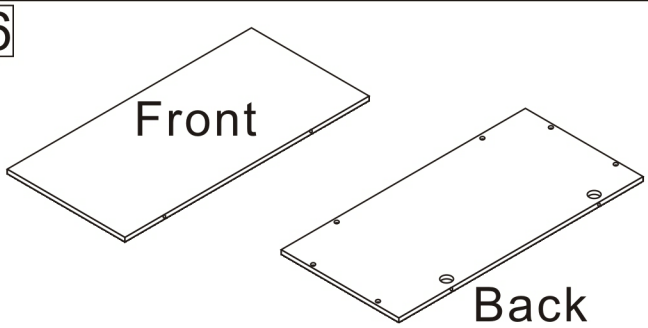

1PC

1

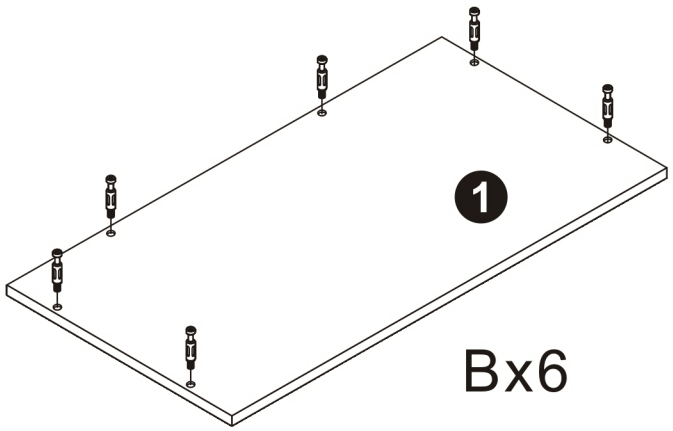

Bx6

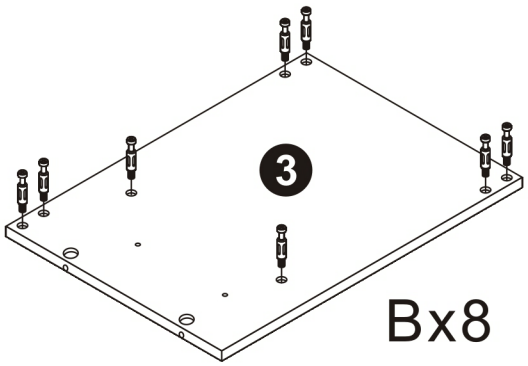

Bx8

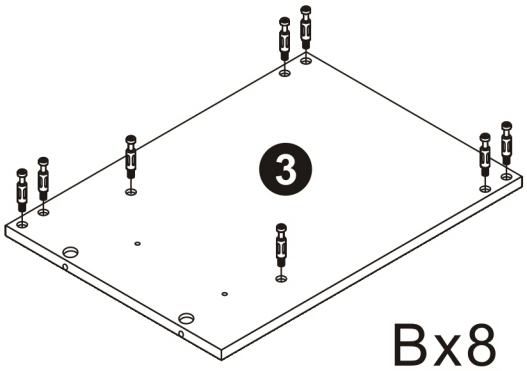

Bx8

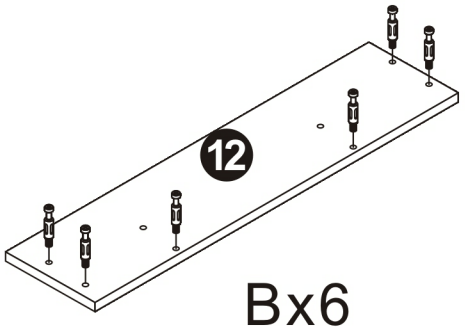

Bx6

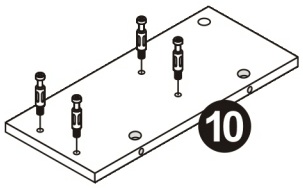

X2

Bx8

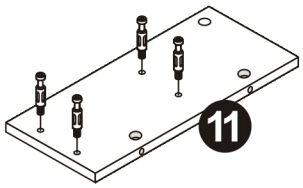

X2

Bx8

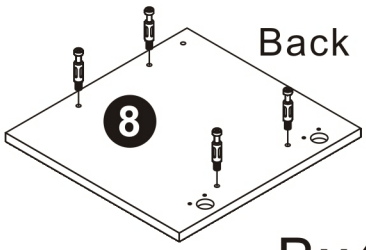

Bx4

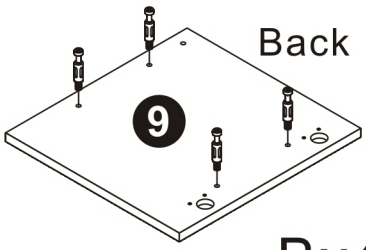

Bx4

B	52PCS
	
6*28mm	

2

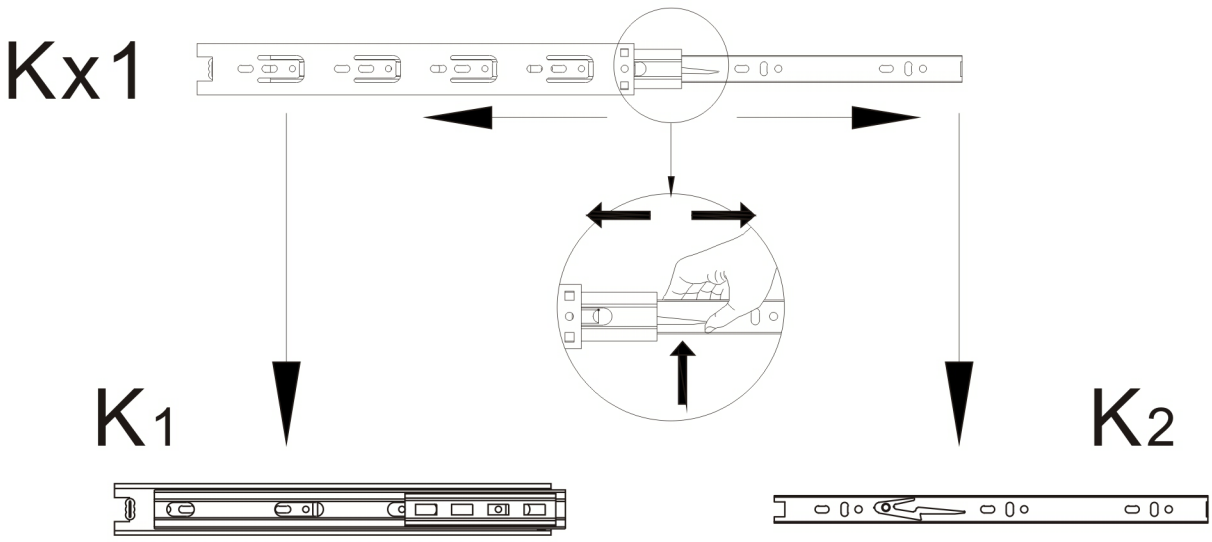

K1	1PCS
	
Three-section Rail	

3

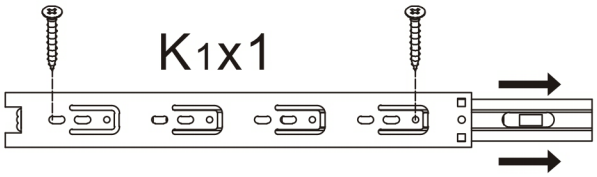

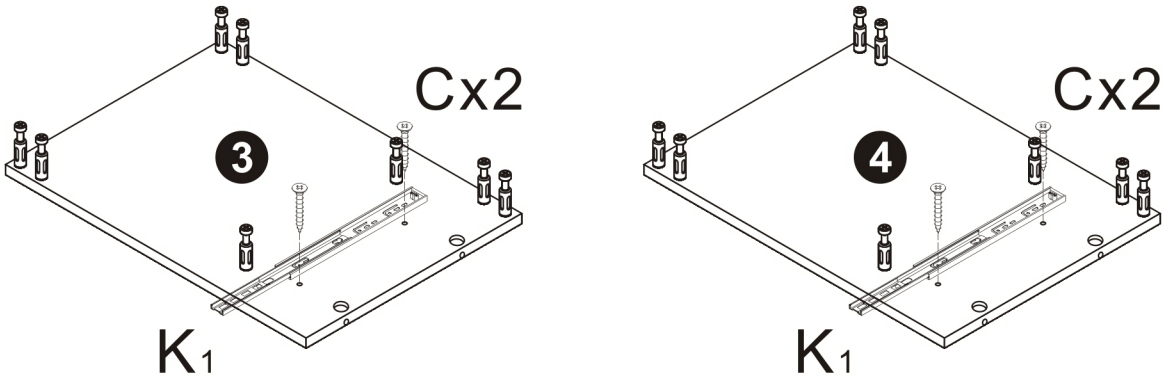

C	4PCS
	
3.5*14mm	

K1	1PCS
	
12 inch Three-section Rail	

4

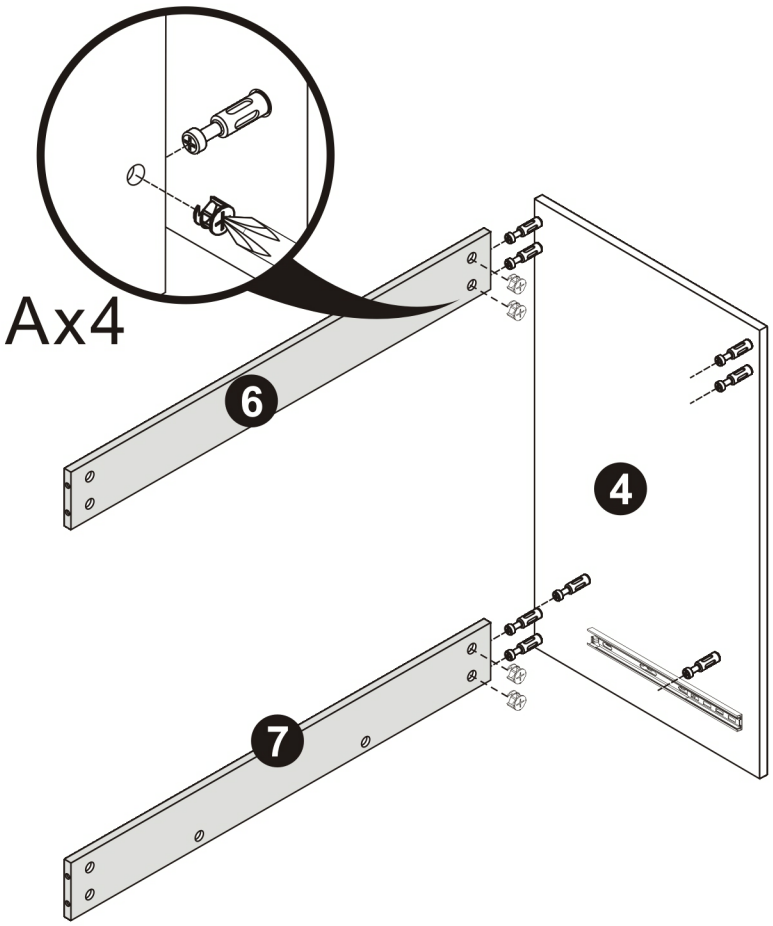

A	4PCS
	
15*10mm	

5

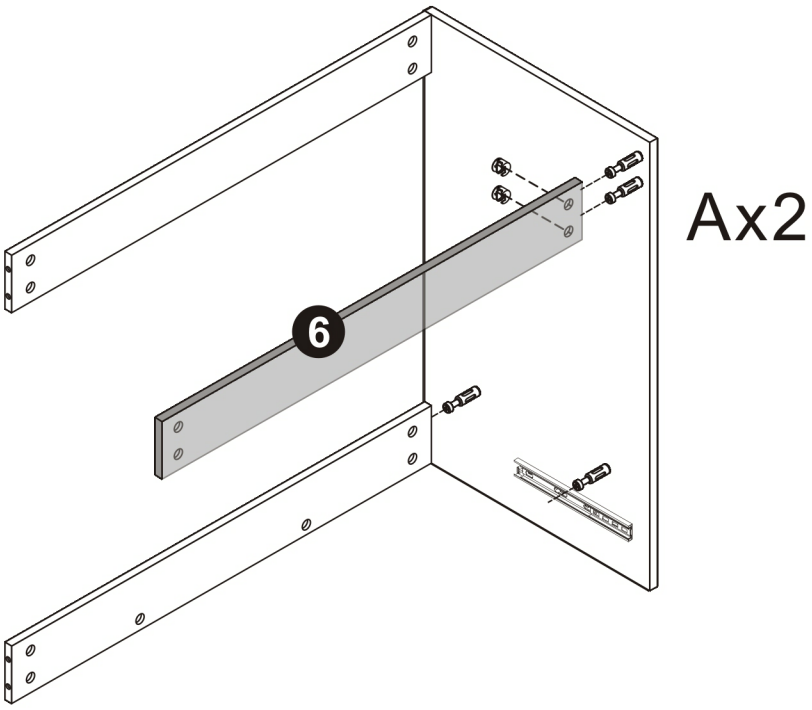

A	2PCS
	
15*10mm	

6

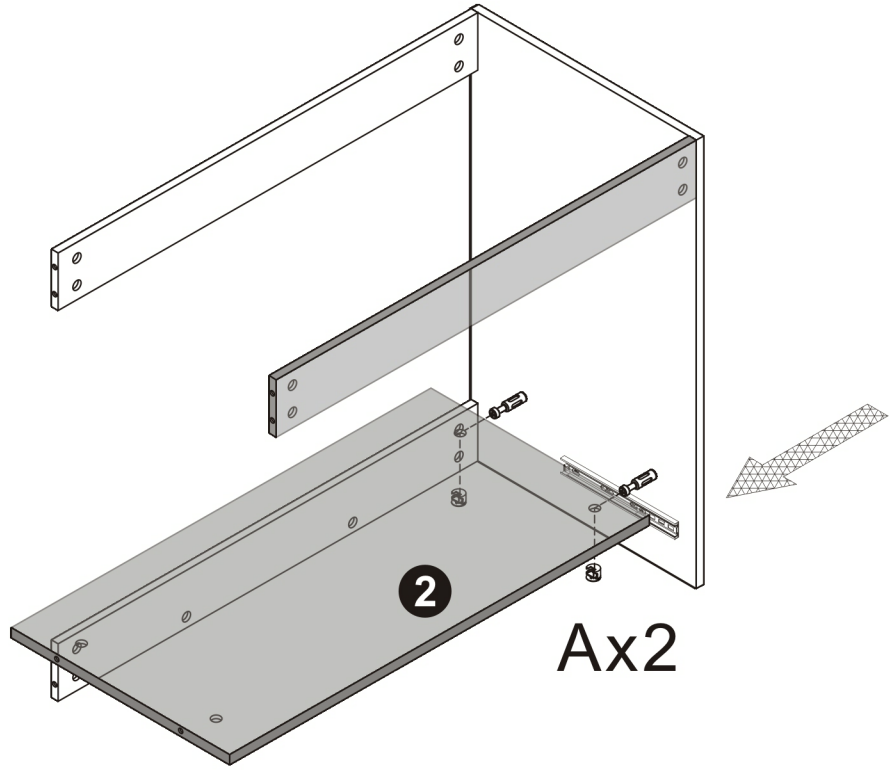

A	2PCS
	
15*10mm	

7

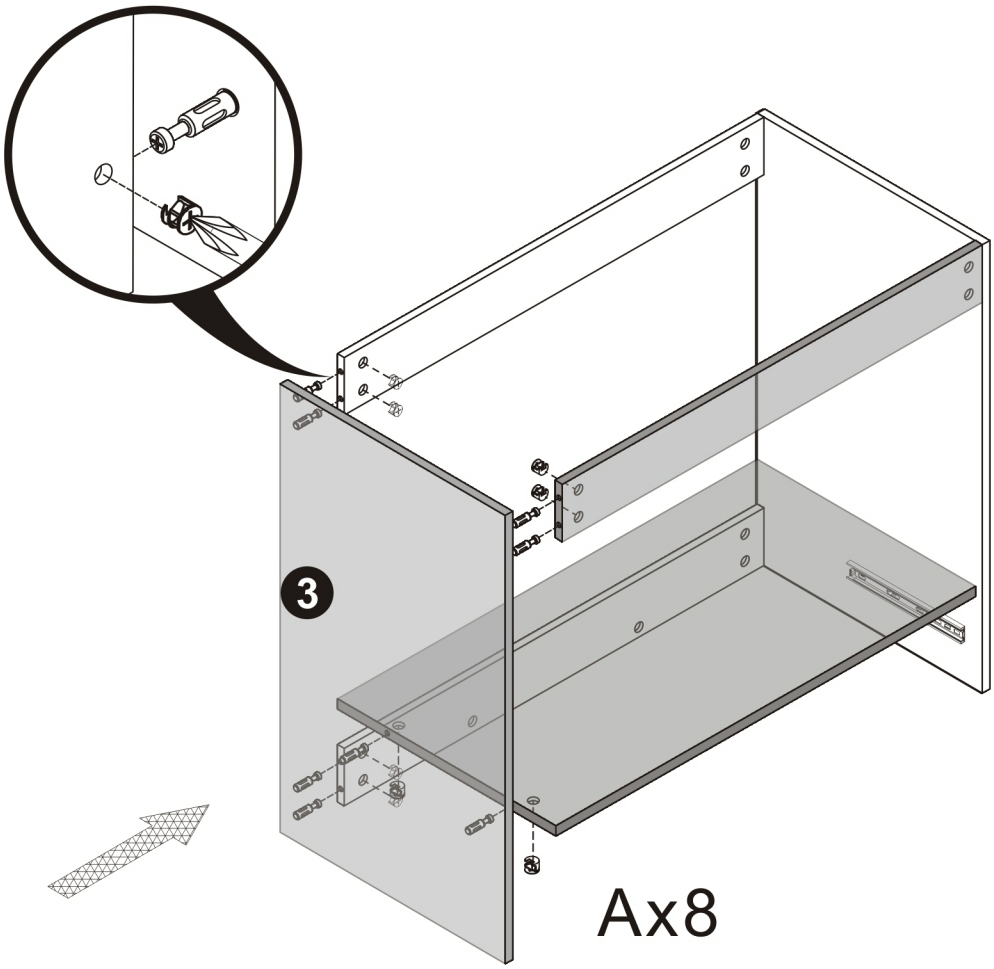

A	8PCS
	
15*10mm	

8

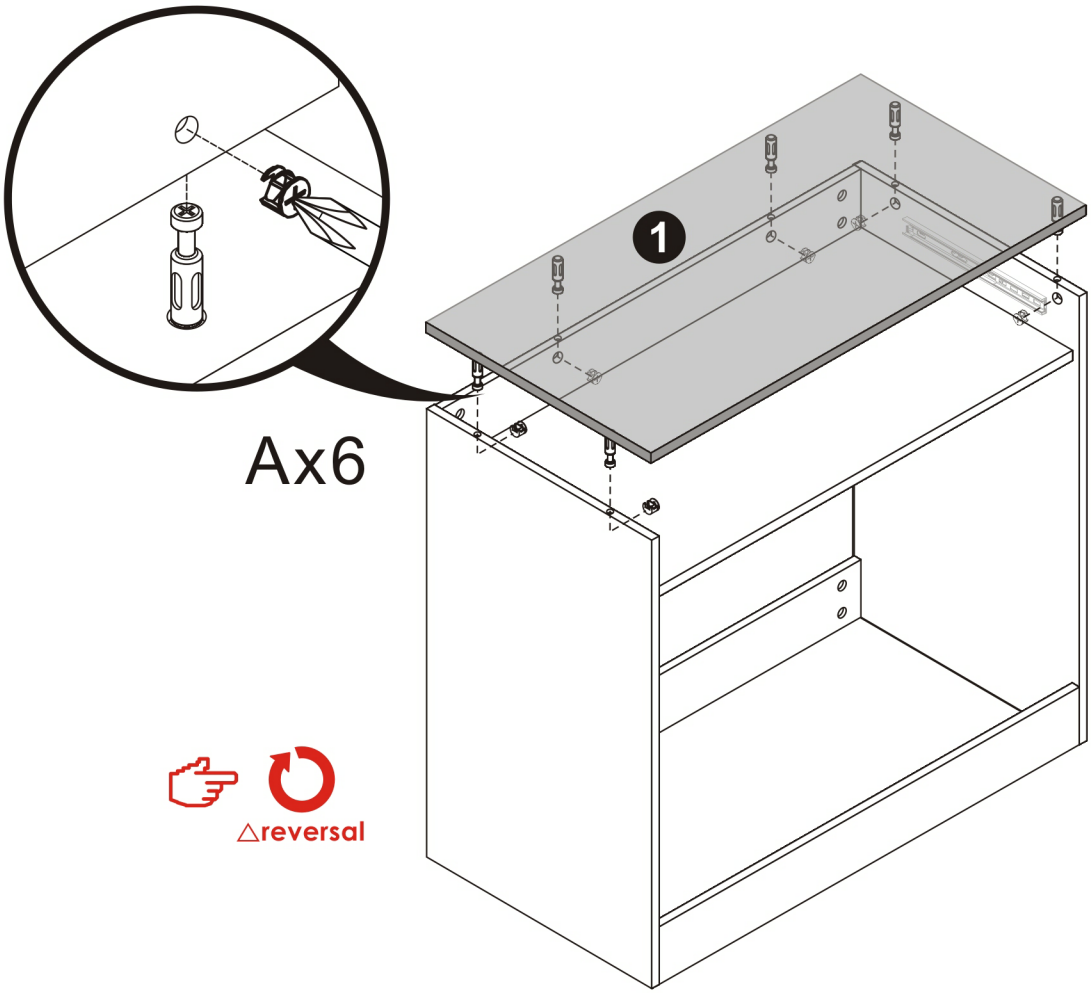

A	6PCS
	
15*10mm	

9

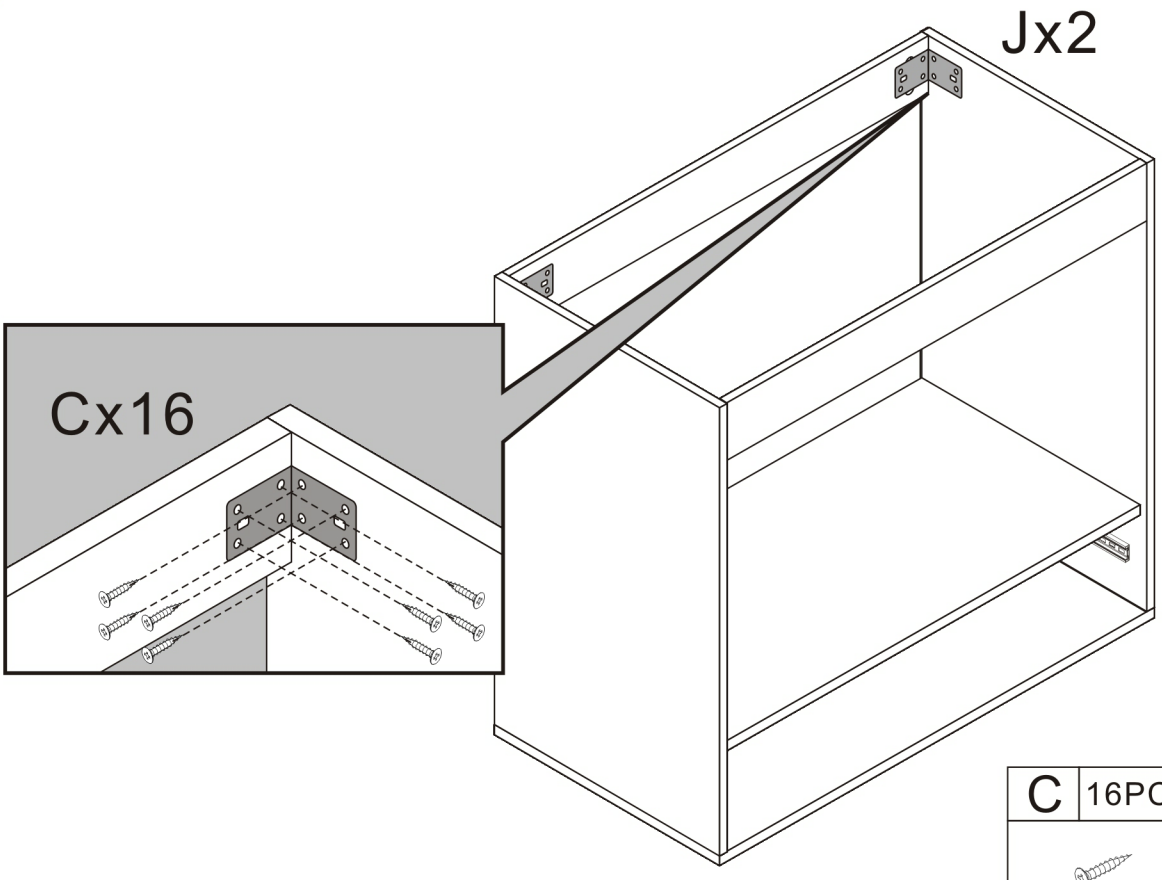

C	16PCS
3.5*14mm	

J	2PCS
	
Corner code	

10

Mx4
Cx8

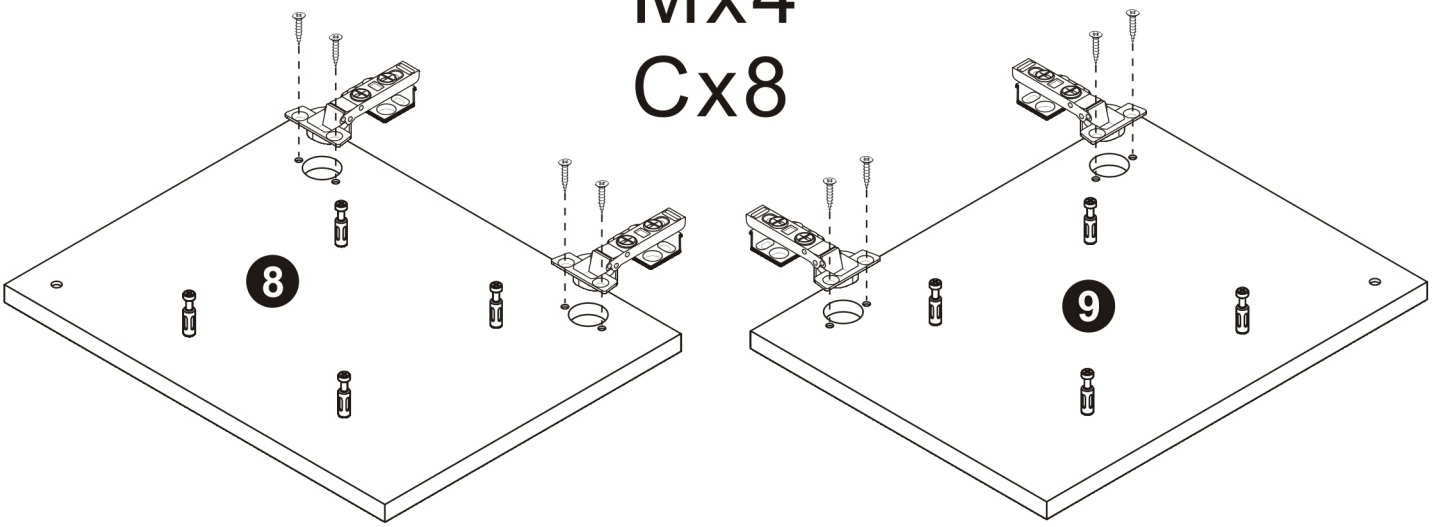

C	8PCS
	
3.5*14mm	

M	4PCS
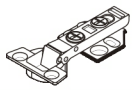	
Straight bend	

11

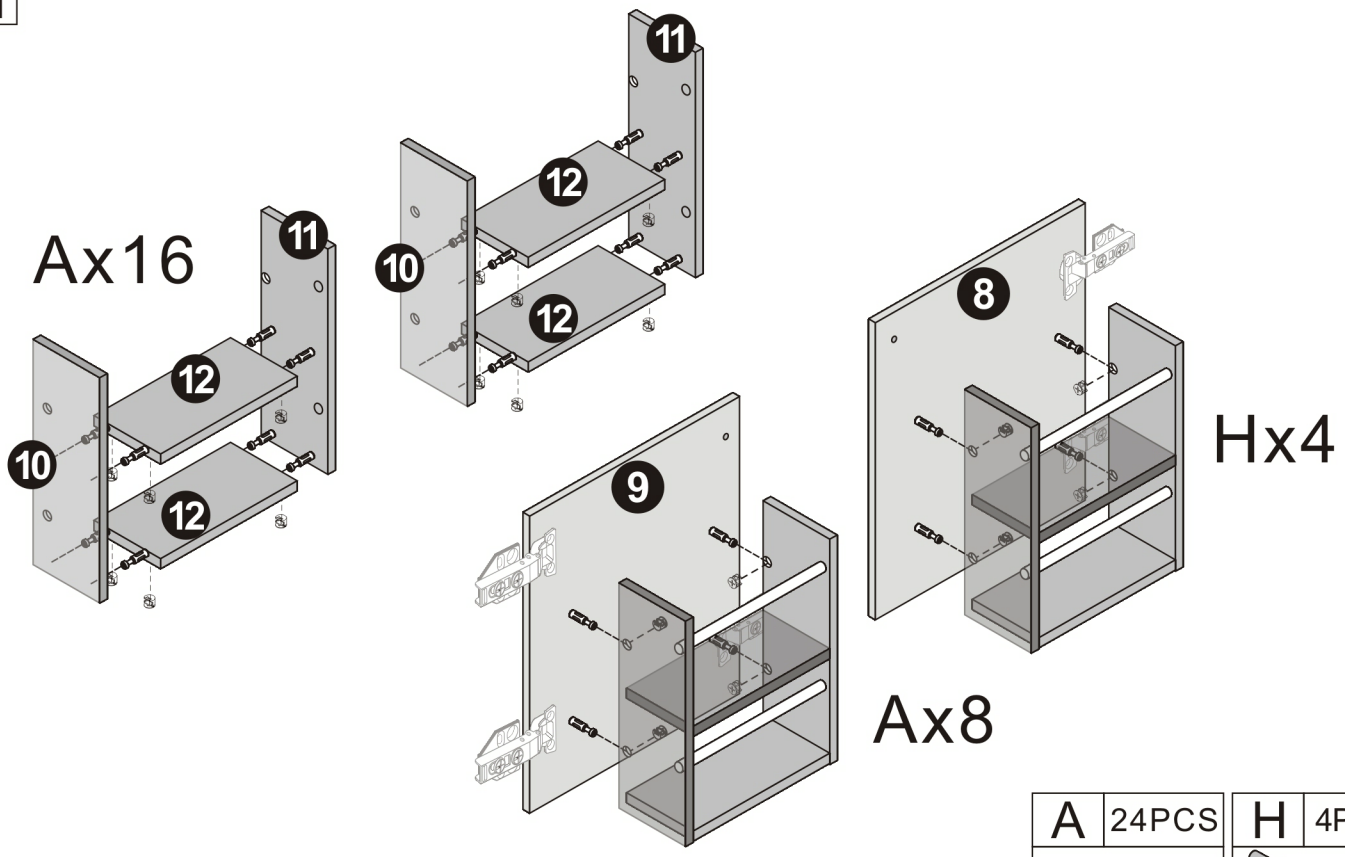

A	24PCS
	
15*10mm	

H	4PCS
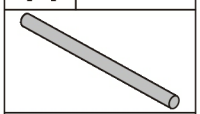	
9.8cm	

12

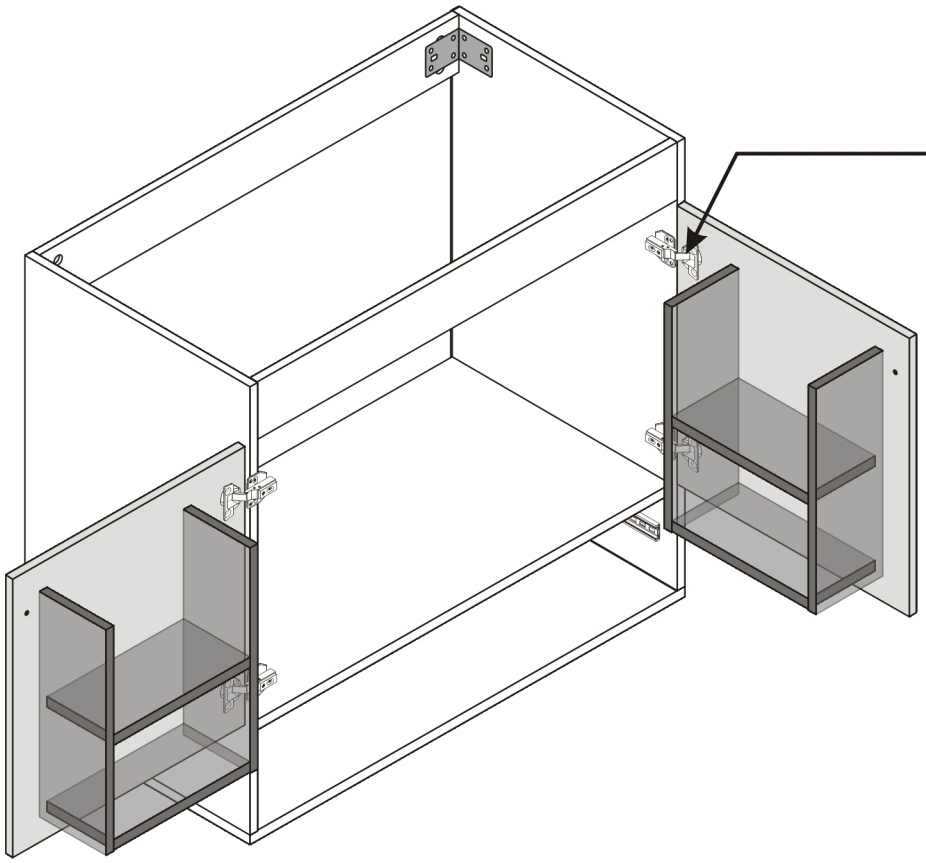

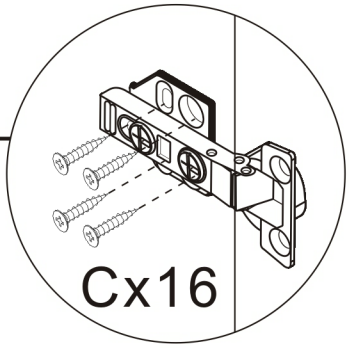

C	16PCS
	
3.5*14mm	

13

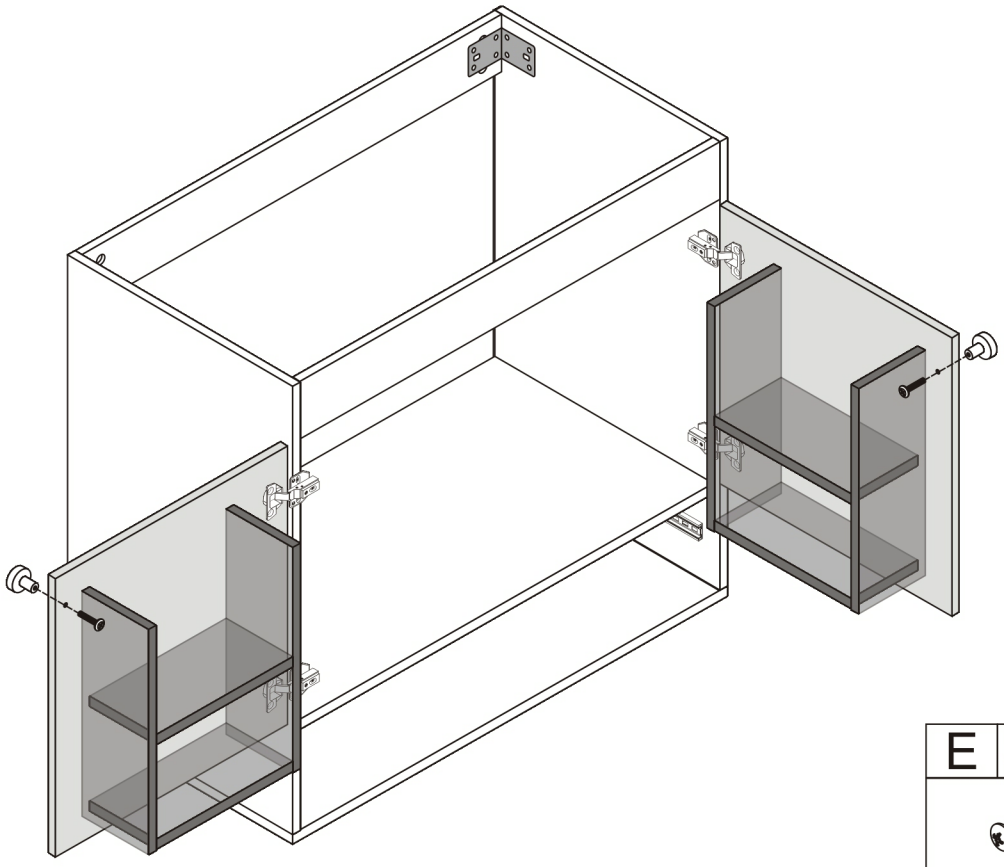

Ex2
Fx2

E	2PCS
	
4*20	

F	2PCS
	
Handles	

SPECIAL TIPS FOR DOOR ALIGNMENT
CONSEJOS ESPECIALES PARA LA ALINEACIÓN DE PUERTAS
CONSEILS SPÉCIAUX POUR L'ALIGNEMENT DES PORTES

A. Lateral adjustment (Moving door left-right) by screw adjusting
Ajuste lateral (Puerta móvil de izquierda a derecha) mediante tornillo de ajuste
Réglage latéral (porte mobile gauche-droite) par réglage à vis

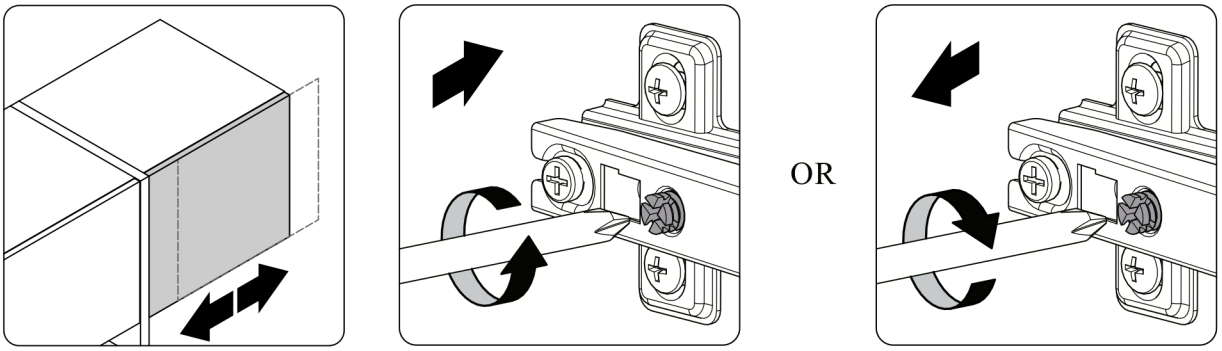

B. Vertical adjustment (Moving door up-down) via the slot on the mounting plate
Ajuste vertical (Puerta móvil arriba-abajo) a través de la ranura en la placa de montaje
Réglage vertical (porte mobile de haut en bas) via la fente sur la plaque de montage

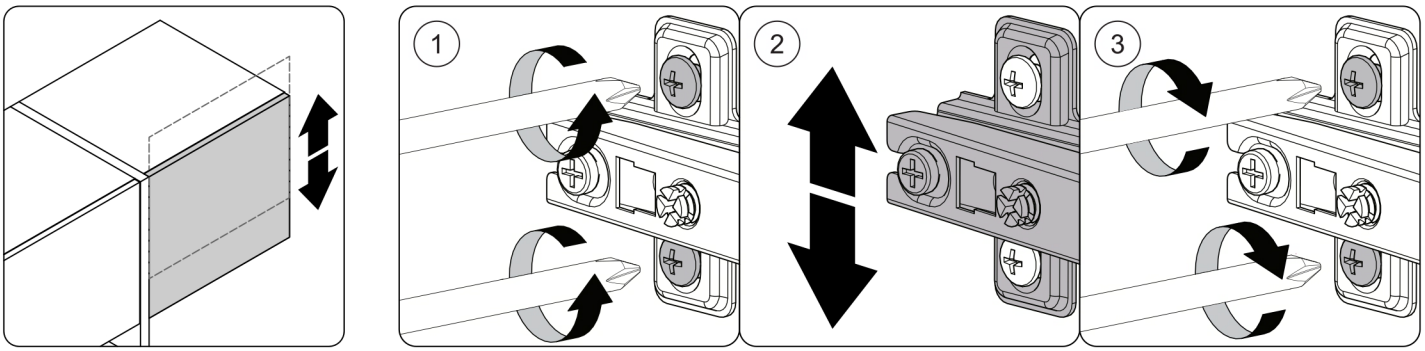

C. Front-to-back adjustment (Spacing Door Off Cabinet) by slacking the hinge arm mounting screw
Ajuste de adelante hacia atrás (espaciado entre la puerta y el gabinete) aflojando el tornillo de montaje del brazo de la bisagra
Ajustement d'avant en arrière (espacement de la porte hors de l'armoire) en desserrant la vis de montage du bras de charnière

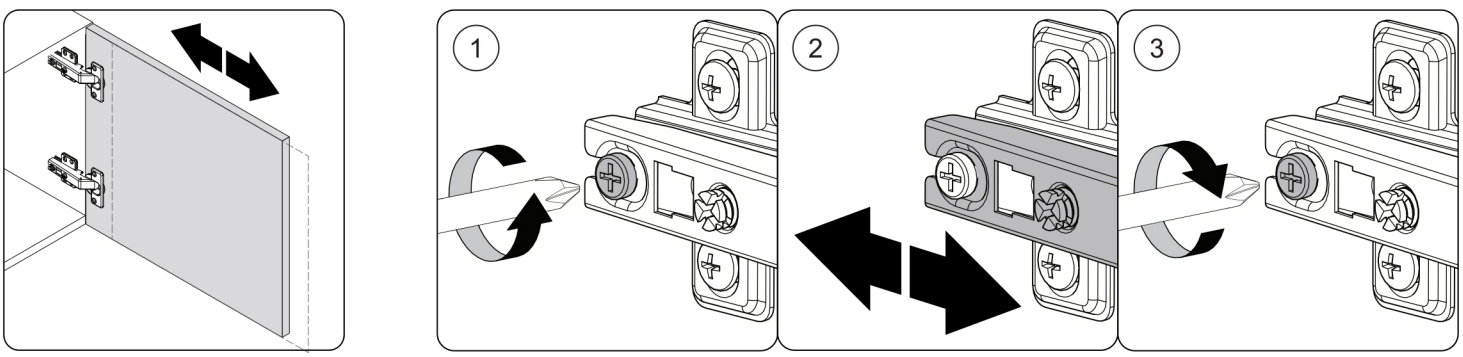

14

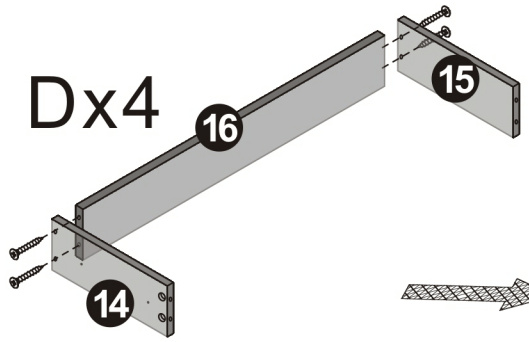

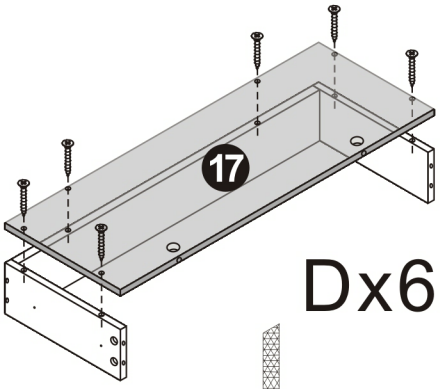

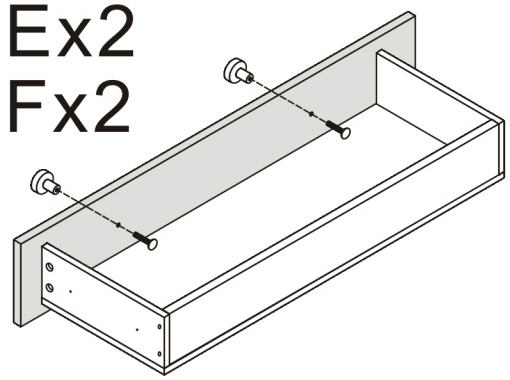

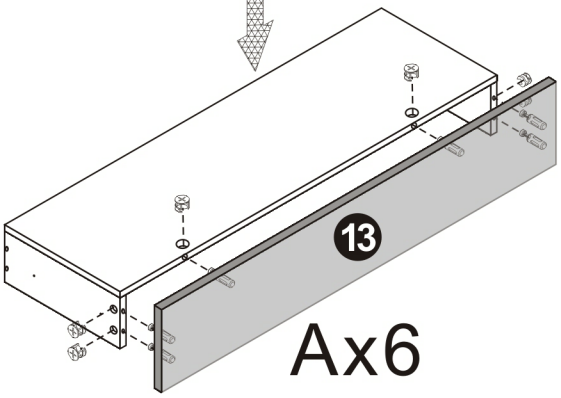

A	6PCS	D	10PCS	E	2PCS	F	2PCS
							
15*10mm		3.5*35mm		4*20		Handles	

15

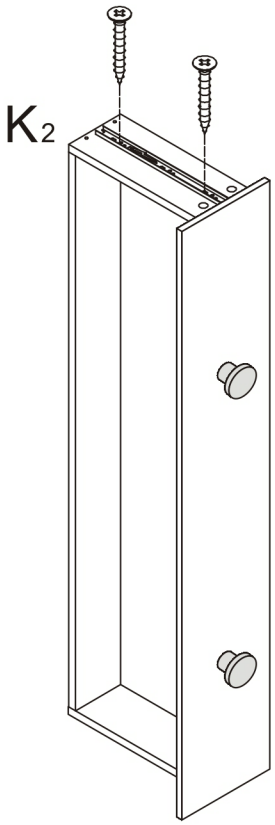

Cx2

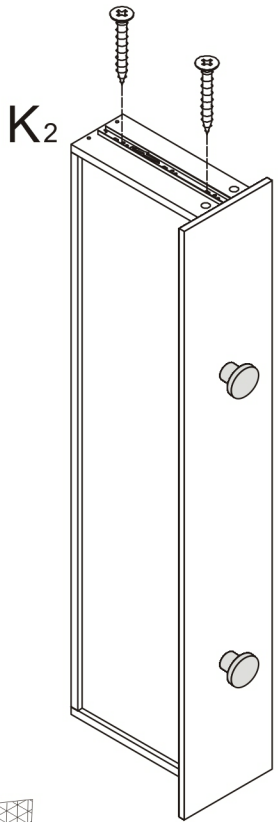

Cx2



C	4PCS	K	2PCS
			
3.5*14mm		Three-section Rail	

16

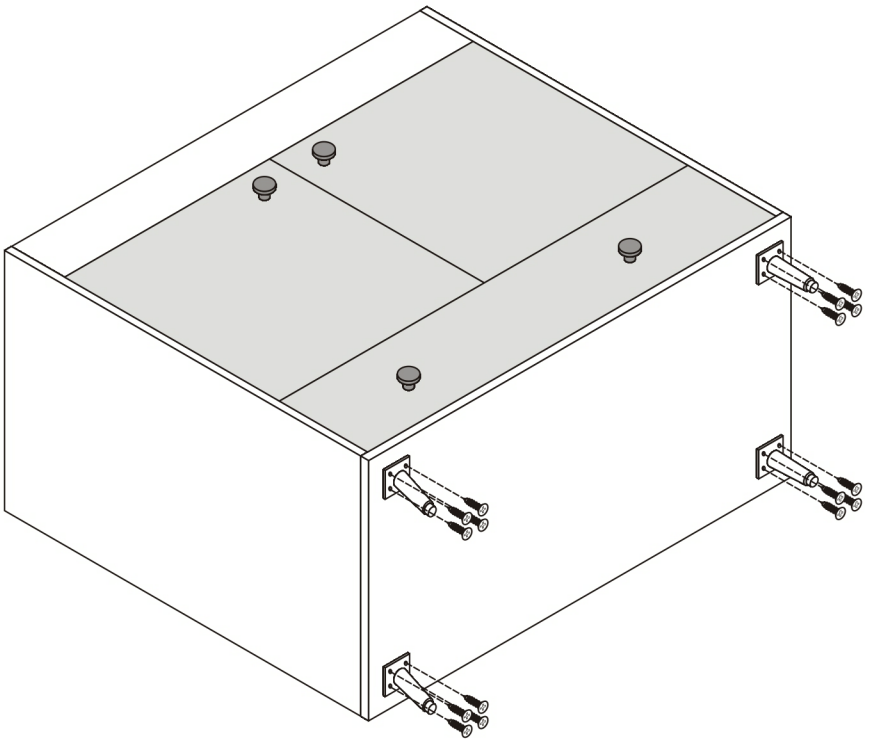

Cx16
Lx4

C	16PCS	L	4PCS
			
3.5*14mm		Hardware Feet	

17

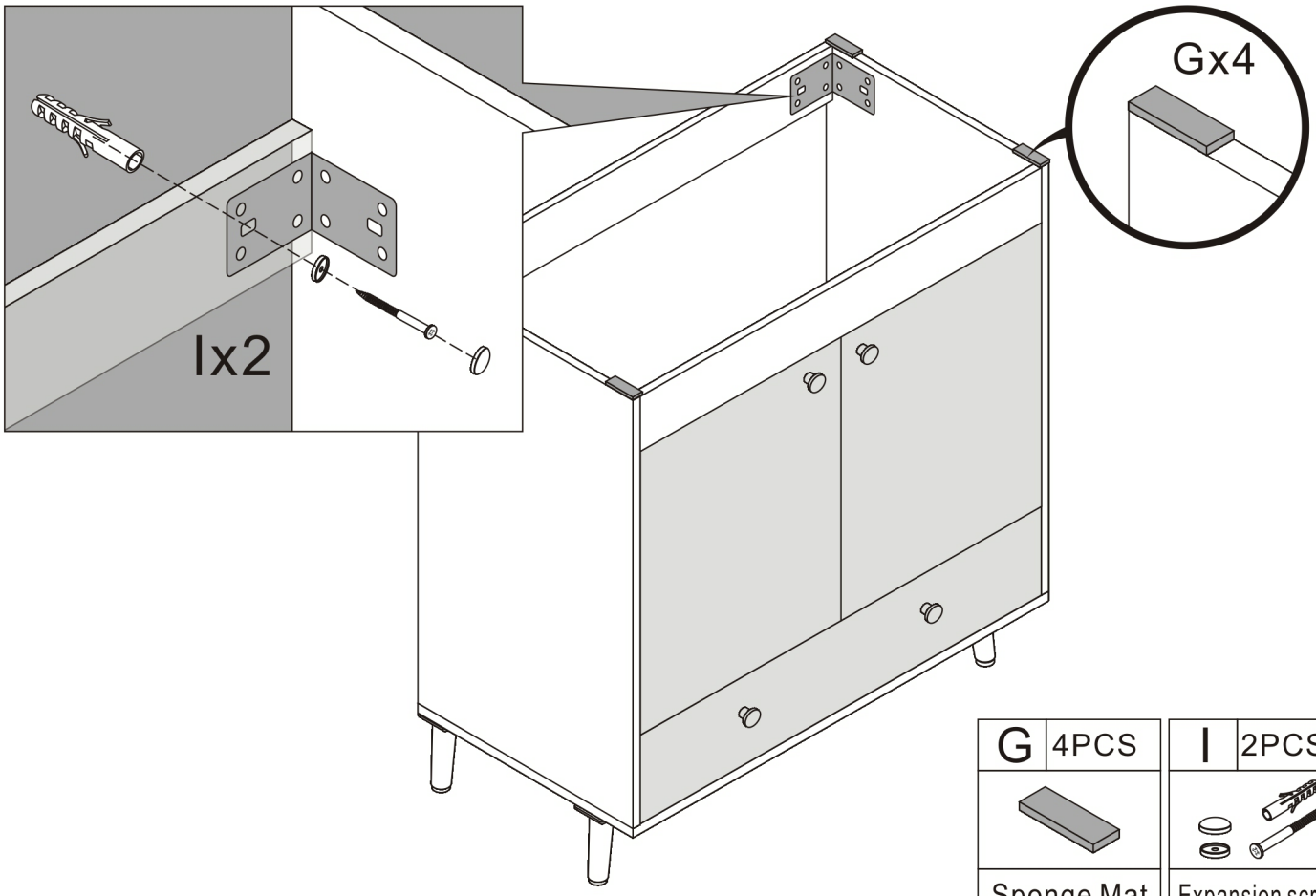

G	4PCS	I	2PCS
Sponge Mat		Expansion screw	

18

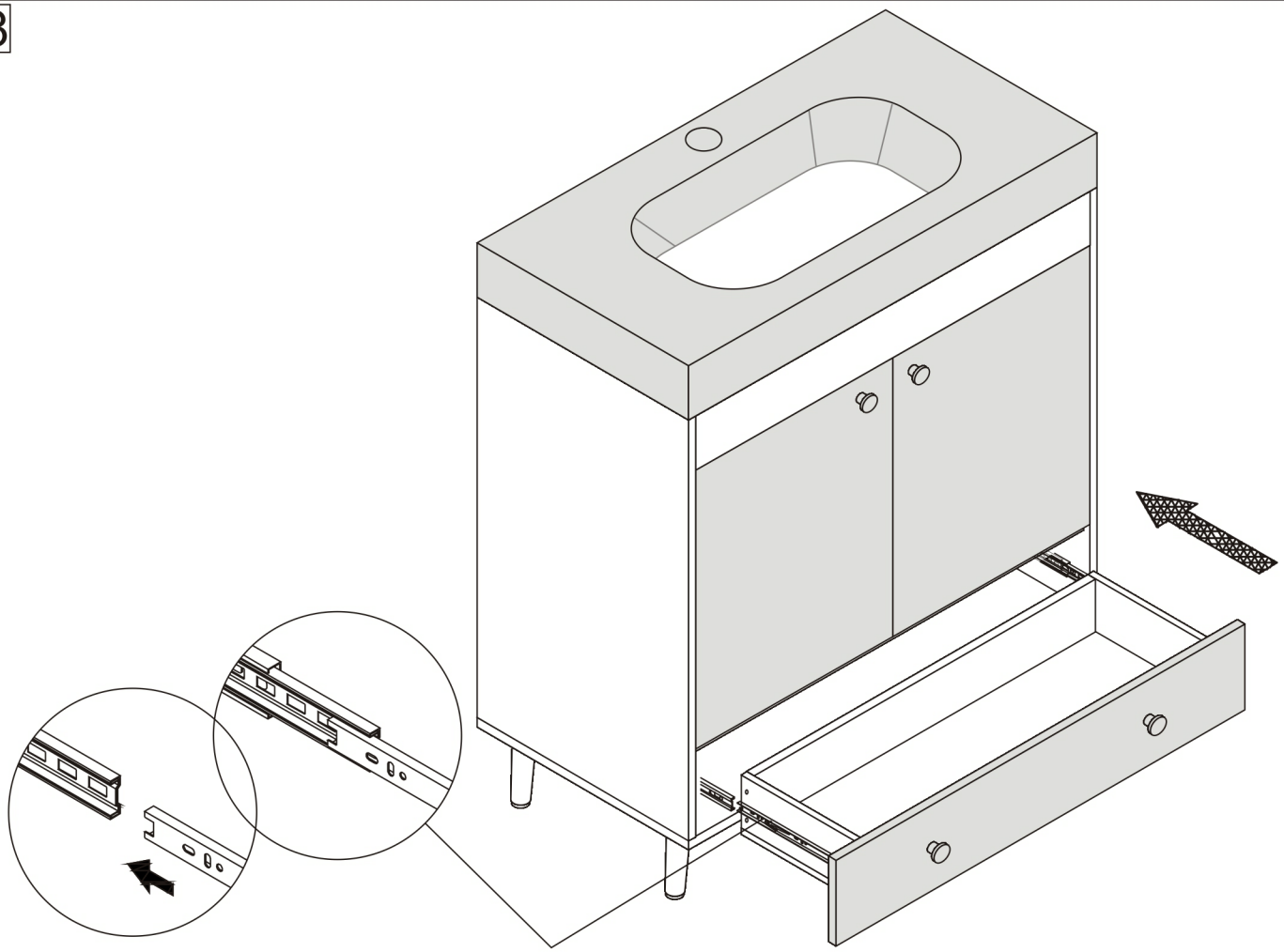

19

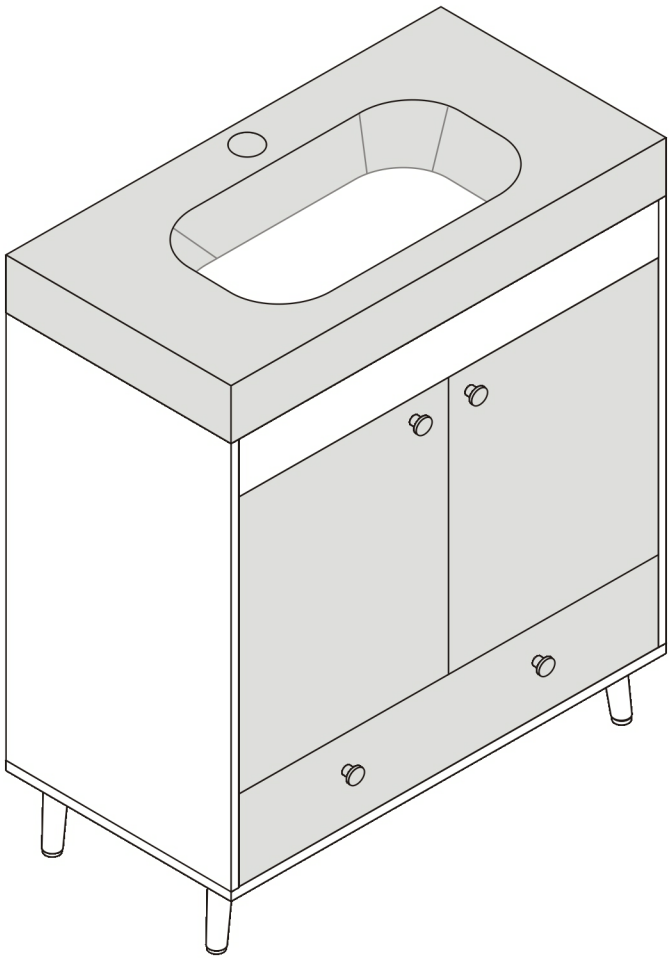

OK