Cabinet

Assembly Instruction - Please keep properly for future reference.

If you find any missing boxes, damaged parts, or accessory shortages, please contact the customer service team of your purchasing channel immediately. We will resolve the issue as quickly as possible.

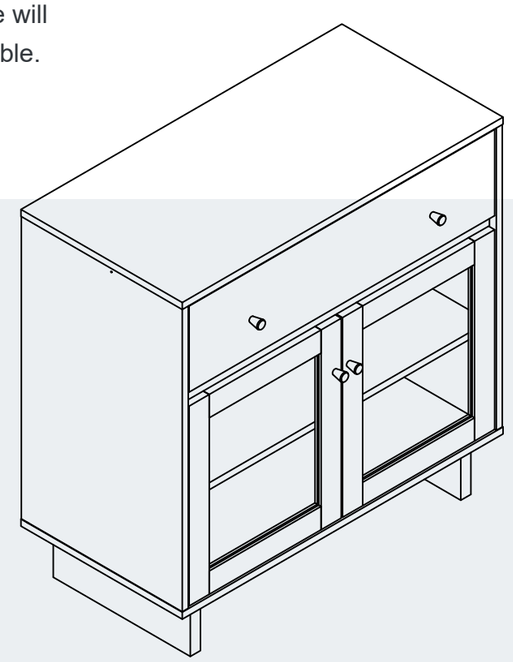

SKU:
C001858030
C001858040

V1.0

EN

CONTACT US

. **Email: service@grandtunnel.com**
In order to receive assistance more quickly, please provide

THE FOLLOWING INFORMATION:

. Order number
. Purchase platform
. Purchase date
. Detailed description of the issue along with photos (if applicable)

Important - Please read these instructions carefully before starting the installation.

Cabinet

Before Assembly

Thank you for choosing our product!
To ensure a smooth installation process, please read this guide carefully to familiarize yourself with the required tools, materials, and installation steps.
Follow the relevant sections to avoid any damage caused by improper installation, and make sure to review all operation and safety guidelines for correct installation procedures.

Packaging Notice:

If you find any missing boxes, damaged parts, or accessory shortages, please contact the customer service team of your purchasing channel immediately. We will resolve the issue as quickly as possible.

Safety and Care Advice

Important :
Please read these instructions fully before starting assembly.

- Check you have all the components and tools listed on the following pages.
- Remove all fittings from the plastic bags and separate them into their groups.
- Keep children and animals away from the work area, small parts could choke if swallowed.
- Make sure you have enough space to lay out the parts before starting.
- During assembly do not stand or put weight on the product, this could cause damage.
- Assemble the item as close to its final position (in the same room) as possible.
- Assemble on a soft level surface to avoid damaging the unit or your floor.
- Parts of the assembly will be easier with 2 people.



- To reduce the likelihood of damaging your product please ensure that your power drill is set on a low torque setting.

Email : **service@grandtunnel.com**

Care and Maintenance

- Only clean using a damp cloth and mild detergent, do not use bleach or abrasive cleaners.
- From time to time check that there are no loose screws on this unit.
- This product should not be discarded with household waste. Take to your local authority waste disposal center.

Handy Hints

- Assemble all parts and bolts loosely during assembly, only once the product is complete should you fully tighten the bolts.
- Regularly check and ensure that all bolts and fittings are tightened properly.

Warning

In order to help prevent overturning, please follow these instructions.

- Use the anti-tip strap or wall fixing method provided (if applicable).
- Do not allow children to climb or hang on the furniture.
- Do not open more than one drawer at a time.
- Do not place heavy items in the top drawers.
- Do not place heavy items on top of the furniture, unless the furniture has been designed for this purpose.
- Please note that only the anti-tip strap is provided. You will need to provide wall plugs and screws applicable for your wall type.

Email : **service@grandtunnel.com**

EN

Customer Service Guide

Thank you for choosing our product! We are committed to providing you with excellent service. If you find any missing parts, damaged packaging, or product damage after receiving all packages, please follow the steps below to quickly contact our customer service team. We will do our best to resolve your issue.

1. Missing Parts

Verify Parts:

1. Refer to the “Parts List” in the manual to verify the name, specifications, and quantity of the missing parts.
2. Take a clear photo of the parts list and mark the missing parts with detailed information, e.g., “Missing 5 pieces of M6×30mm screws.”

Contact Us:

By Email:

Send an email to **service@grandtunnel.com**, with the subject line “Missing Parts Issue.” Include the following in the email:

- A description of the missing parts and a photo of the parts list.
- Order details (order number, purchase platform, purchase date).

2. Product or Packaging Damage

If it affects normal use:

Steps:

1. Take clear photos or videos showing the damaged parts and the extent of the damage (multi-angle shots are recommended).
2. Email the photos/videos along with order details to **service@grandtunnel.com**, with the subject line “Product Damage Issue.”

Resolution:

After verification, we will arrange for a replacement part, product exchange, or refund as quickly as possible.

If it does not affect normal use:

Steps:

1. Contact our customer service team (by email: **service@grandtunnel.com**).
2. Provide a description of the damage and include relevant photos or videos.

Resolution:

We will provide repair guidance or an appropriate compensation plan based on the specific situation.

Contact Us:

Customer Service Email: **service@grandtunnel.com**

Helpful Tips

To process your issue efficiently, please prepare the following information:

- Order details (order number, purchase platform, purchase date).
- Clear photos or videos.
- We are committed to providing quick and professional solutions, no matter the size of the issue, to ensure your satisfaction.

Thank you for your trust and support!
We hope you enjoy using our product!

EN

Parts List - Panels

Please check you have all the panels listed below.

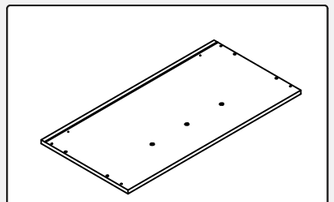

1	796x400x15mm	x1

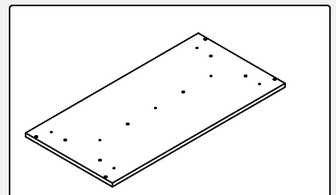

2	796x400x15mm	x1

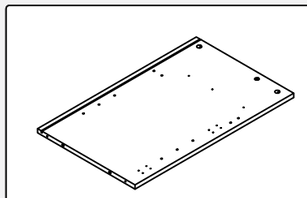

3	650x399x15mm	x1

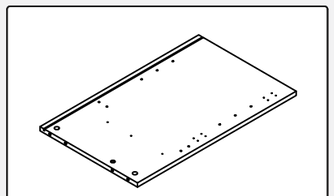

4	650x399x15mm	x1

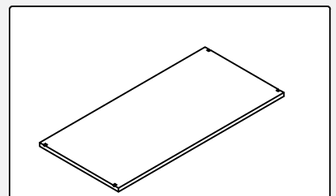

5	762x363x15mm	x1

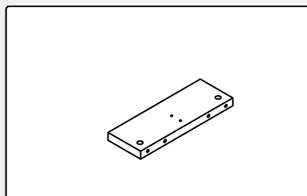

6	340x120x25mm	x2

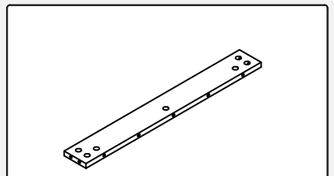

7	646x80x15mm	x1

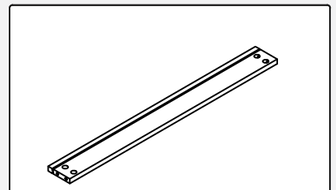

8	764x80x15mm	x1

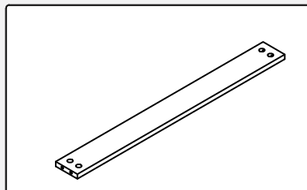

10	764x80x15mm	x1

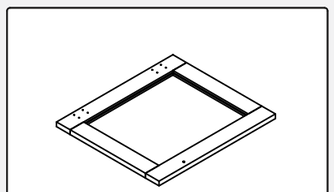

11	429x377.5x15mm	x1

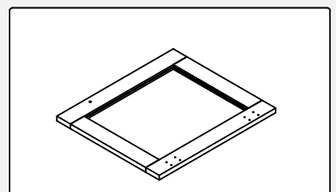

12	429x377.5x15mm	x1

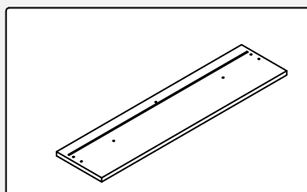

13	758x185x15mm	x1

Email : **service@grandtunnel.com**

Parts List - Panels

Please check you have all the panels listed below.

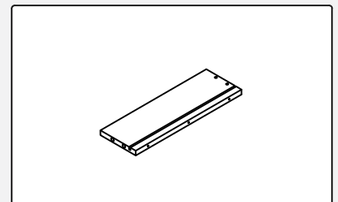

14	300x100x12mm	x1

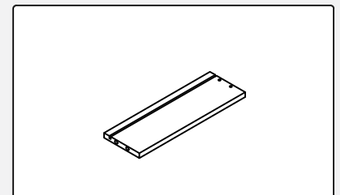

15	300x100x12mm	x1

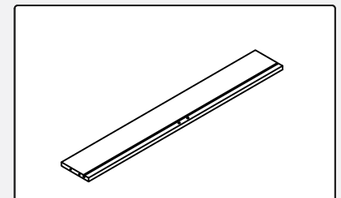

16	715x100x12mm	x1

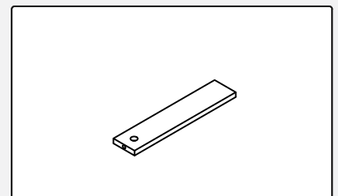

17	287x60x12mm	x1

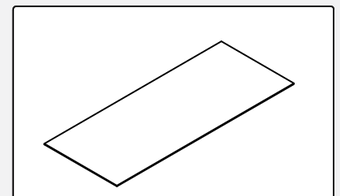

18	725x297x3mm	x1

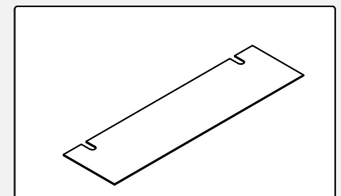

19	209x774x3mm	x1

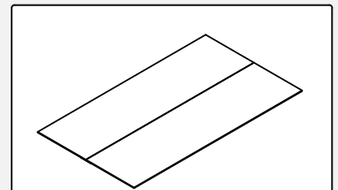

20	444x774x3mm	x1

Email : **service@grandtunnel.com**

EN

Parts List - Fittings

Please check you have all the fittings listed below.

Note: The quantities below are the correct amount to complete the assembly. In some cases more fittings may be supplied are required.

 **A** Ø15X9.5mm **x28+2**	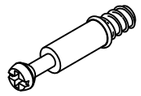 **B** Ø6.5X35mm **x28+2**	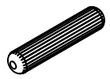 **C** Ø8X30mm **x14+1**
 **D** Ø3.5X12mm **x44+3**	 **E** Ø4X35mm **x10+1**	 **F** Ø4X19mm **x4+1**
 **G** Ø20X23mm **x4**	 **H** 112X43X32mm **x4**	 **I** Ø5X16mm **x4+1**
 Ø3X14mm **J** **x10+1Set**	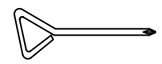 **K** 70X30X5mm **x1**	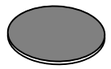 **L** Ø21mm **x4+1**
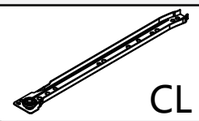 CL **M** L=300mm **x1**	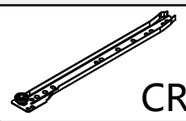 CR **M** L=300mm **x1**	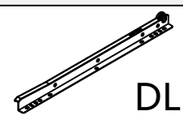 DL **M** L=300mm **x1**
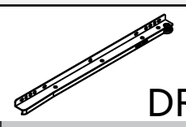 DR **M** L=300mm **x1**	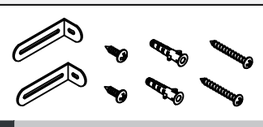 **N** **x1Set**	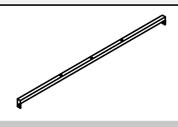 **O** 763X35X15mm **x1**

Email : **service@grandtunnel.com**

Parts List - Fittings

Please check you have all the fittings listed below.

Note: The quantities below are the correct amount to complete the assembly. In some cases more fittings may be supplied are required.

 **P** M6X25mm **x3+1**	 **Q** M6X12mm **x2+1**

Cam Lock Fastening System

Insert the cam bolt into the hole first, then insert the cam lock and lock it.

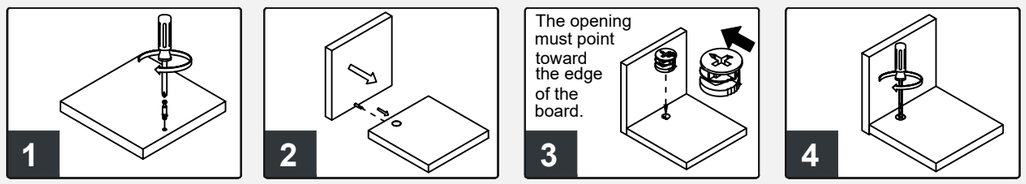

Email : **service@grandtunnel.com**

EN

EN

Assembly Instructions

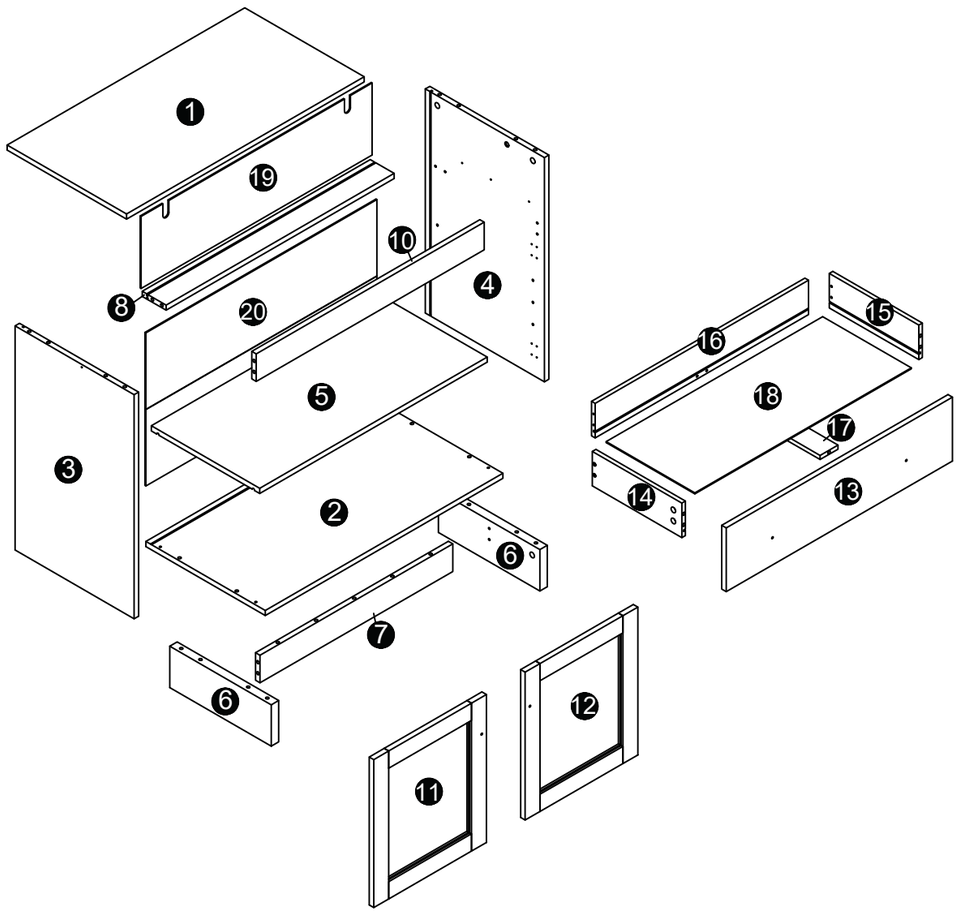

Email : **service@grandtunnel.com**

Step 1

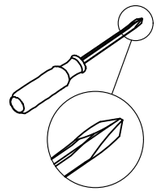

Ⓓ	X6	Ⓜ	X1	Ⓜ	X1
			CL		CR
ø3.5*12mm		L=300mm		L=300mm	

Use screw (D) to fix accessory (M) onto boards (3) and (4), as shown in the figure.

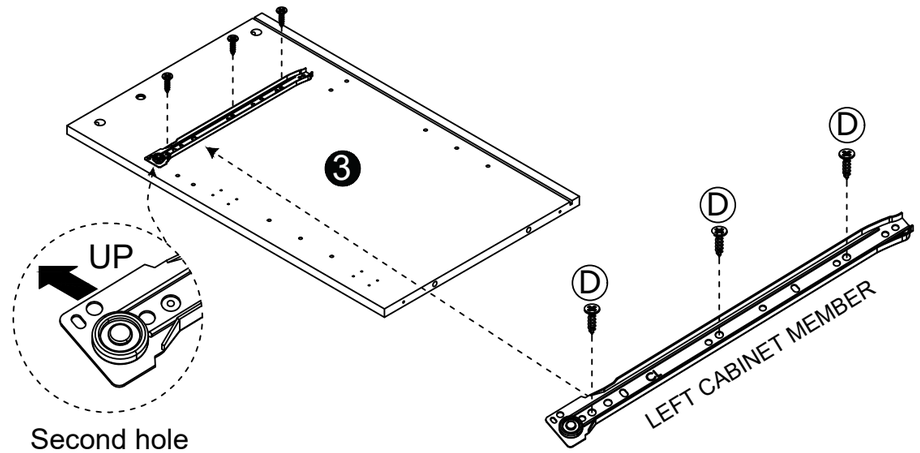

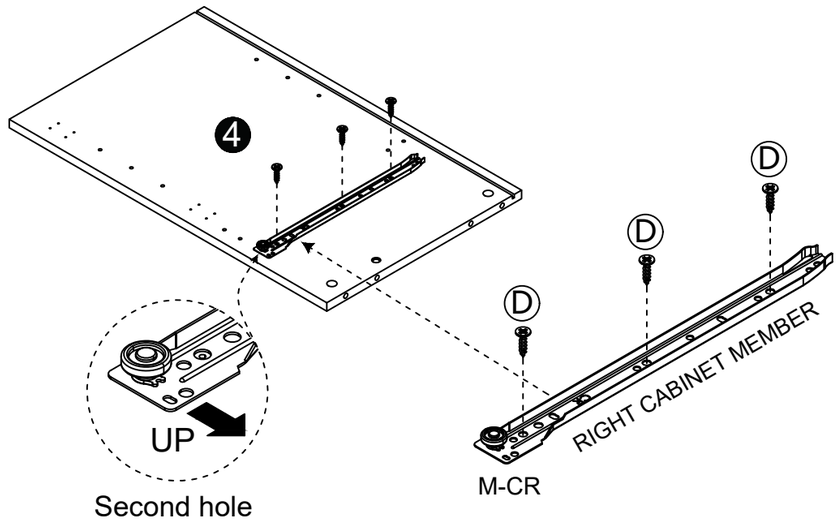

Email : **service@grandtunnel.com**

EN

Step 2

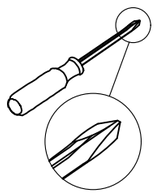

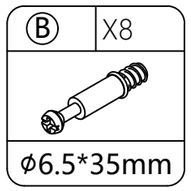

Install accessory (B) onto boards (3) and (4), as shown in the figure.

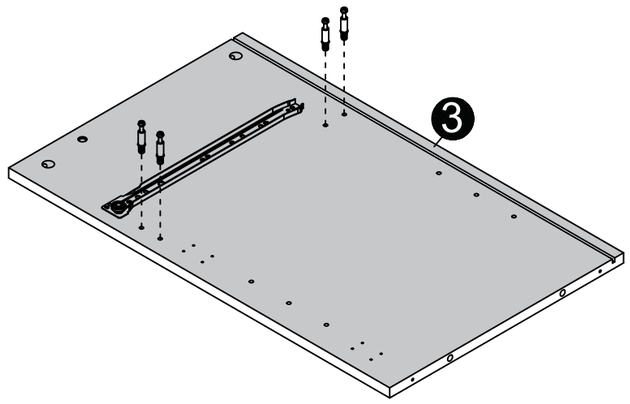

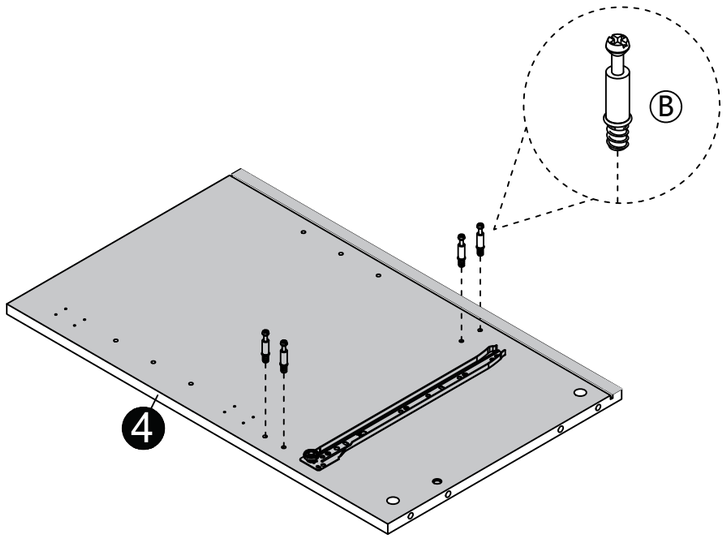

Email : **service@grandtunnel.com**

Step 3

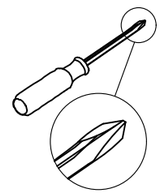

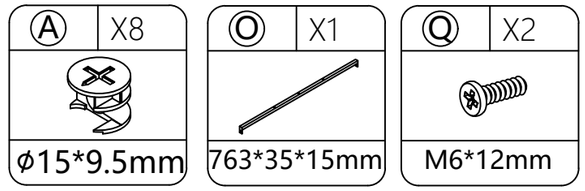

Connect board (8) and (10) with board (3) and (4), fix with accessory (A). Then pass screw (Q) through accessory (O) to connect with board (3) and (4).

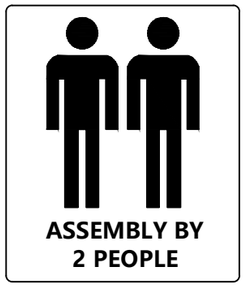

Email : **service@grandtunnel.com**

EN

Step 4

Insert board (20) vertically along the grooves of boards (3) and (4).

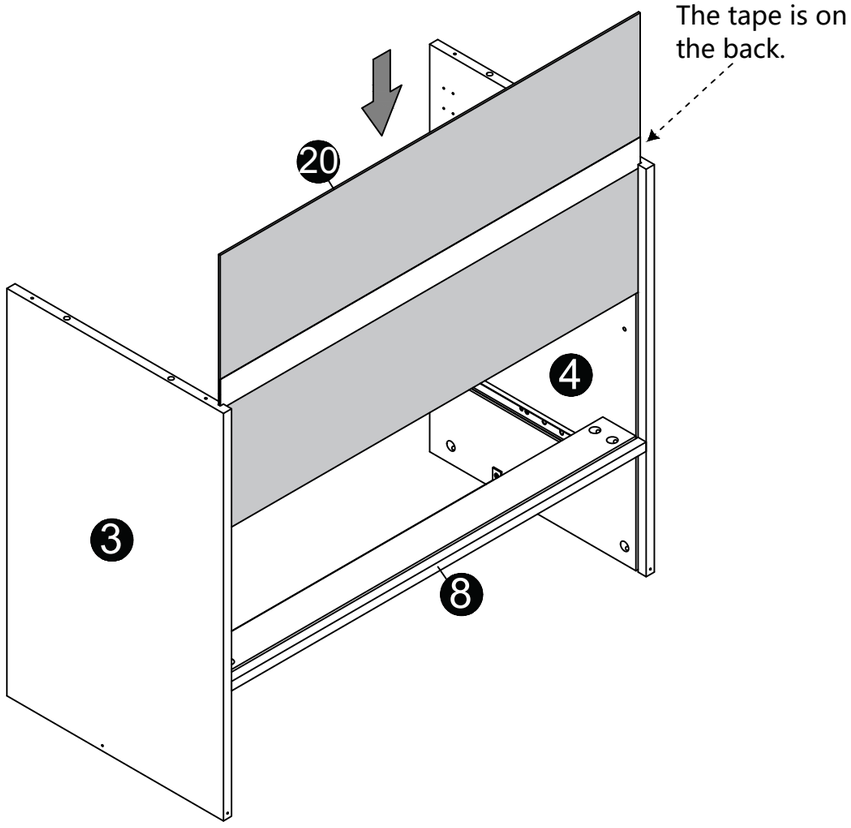

Email : **service@grandtunnel.com**

Step 5

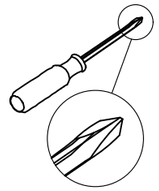

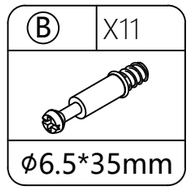

Install accessory (B) onto boards (2) and (6), as shown in the figure.

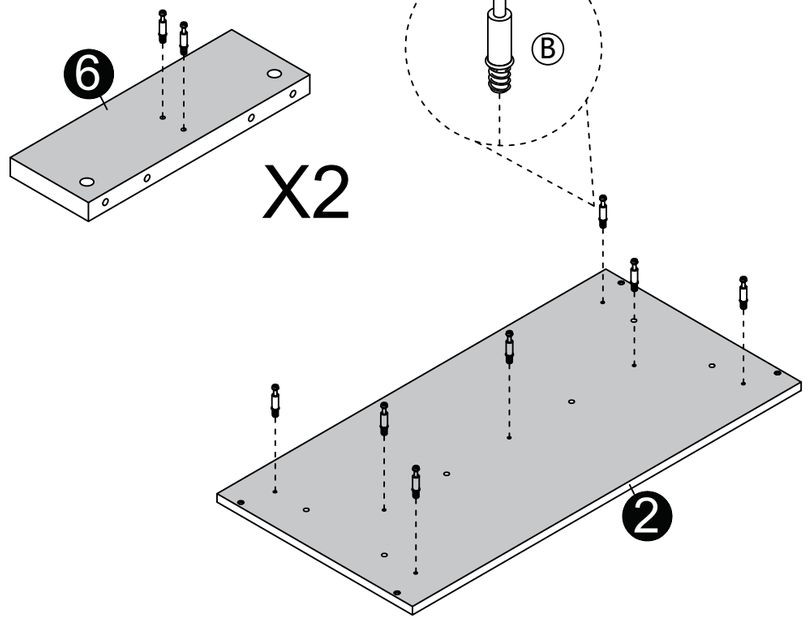

EN

Email : **service@grandtunnel.com**

Step 6

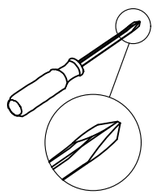

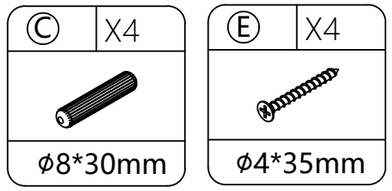

Insert accessory (C) into the corresponding holes of board (3) and (4), align them and insert vertically into board (2). Then fix with screw (E).

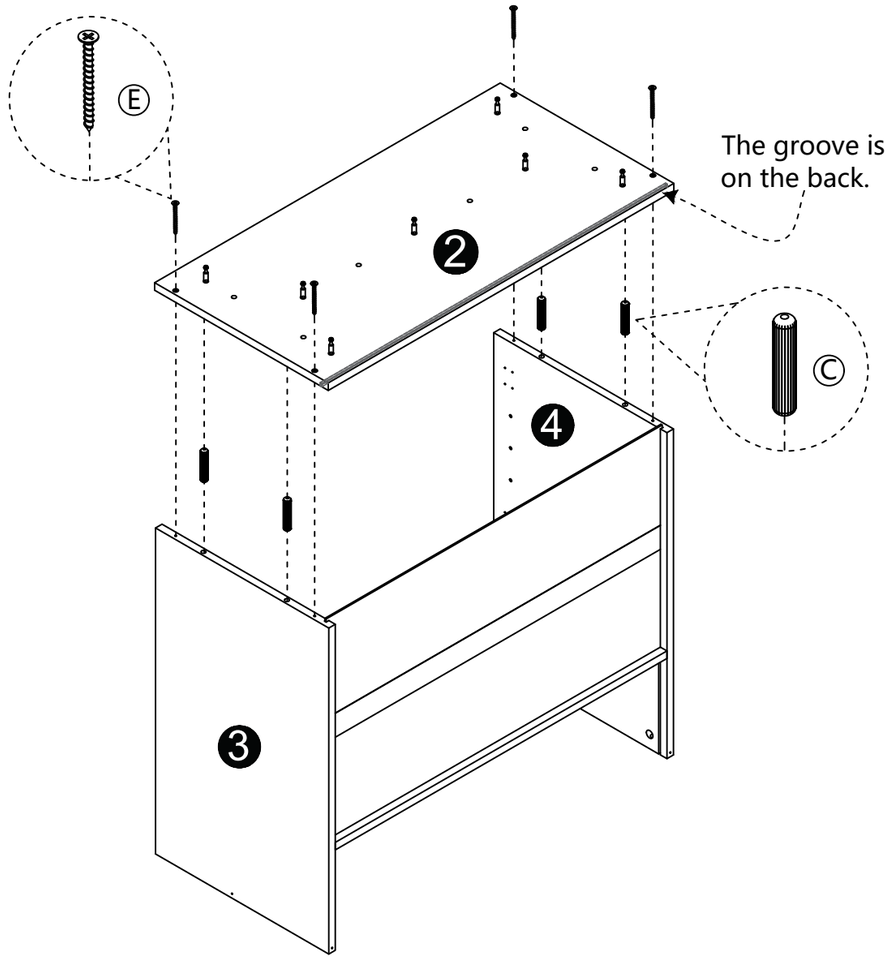

Email : **service@grandtunnel.com**

Step 7

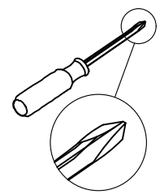

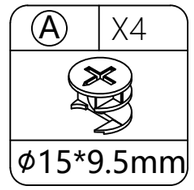

Connect board (7) and board (6), and fix them with accessory (A).

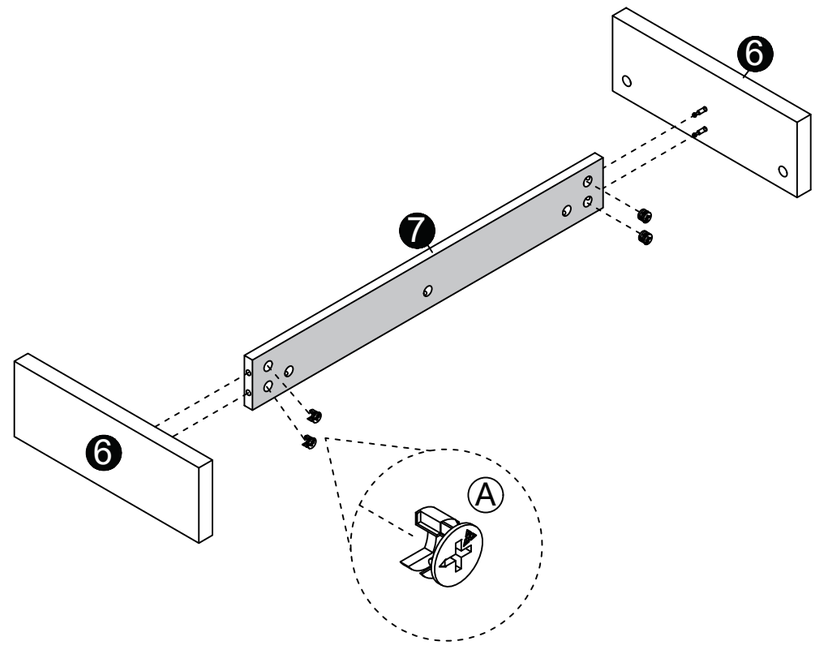

Insert the cam bolt into the hole first, then insert the cam lock and lock it.

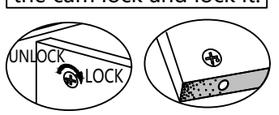

Proper orientation of CAM LOCK

Email : **service@grandtunnel.com**

EN

Step 8

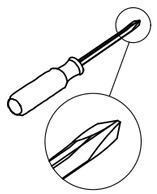

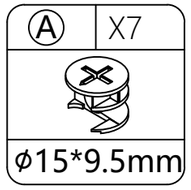

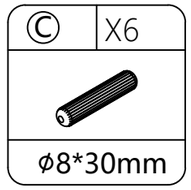

Insert accessory (C) into the corresponding holes of board (2) to connect with boards (6) and (7), and fix with accessory (A).

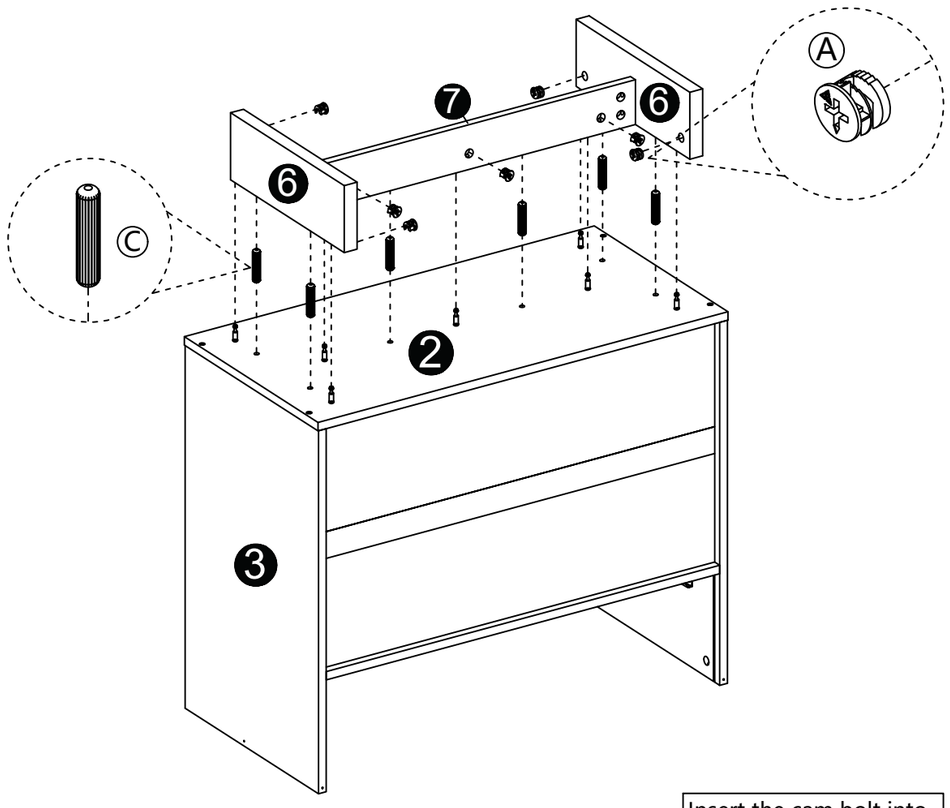



After installation, flip it over.

Insert the cam bolt into the hole first, then insert the cam lock and lock it.

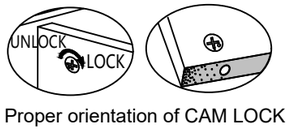

Proper orientation of CAM LOCK

Email : **service@grandtunnel.com**

Step 9

Insert board (19) vertically along the grooves of boards (3) and (4).

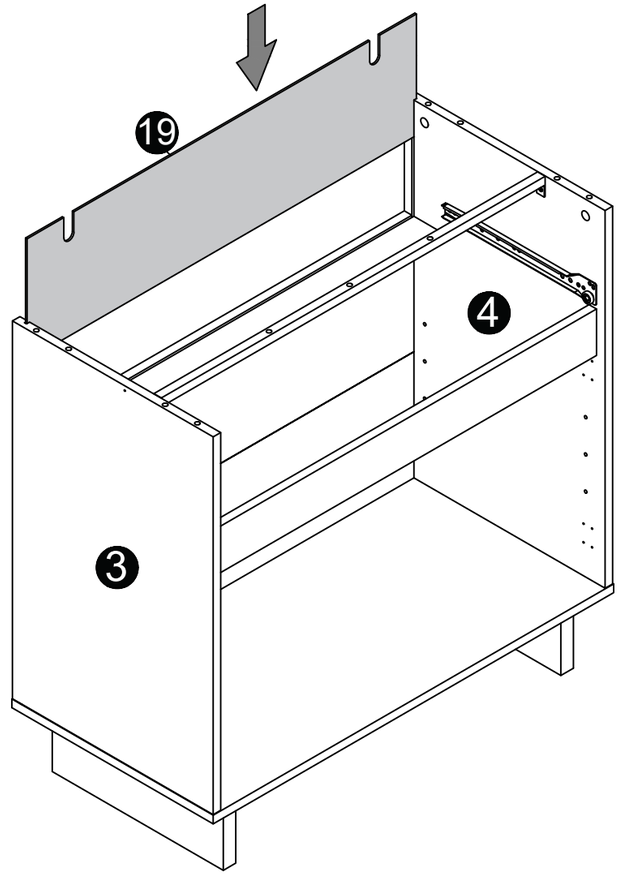

EN

Email : **service@grandtunnel.com**

Step 10

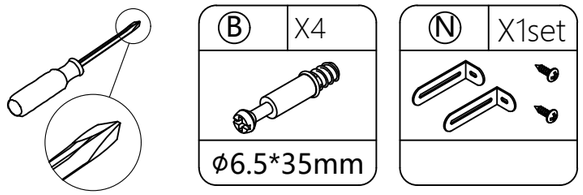

Install fitting (B) and fitting (N) onto panel (1) as shown in the figure.

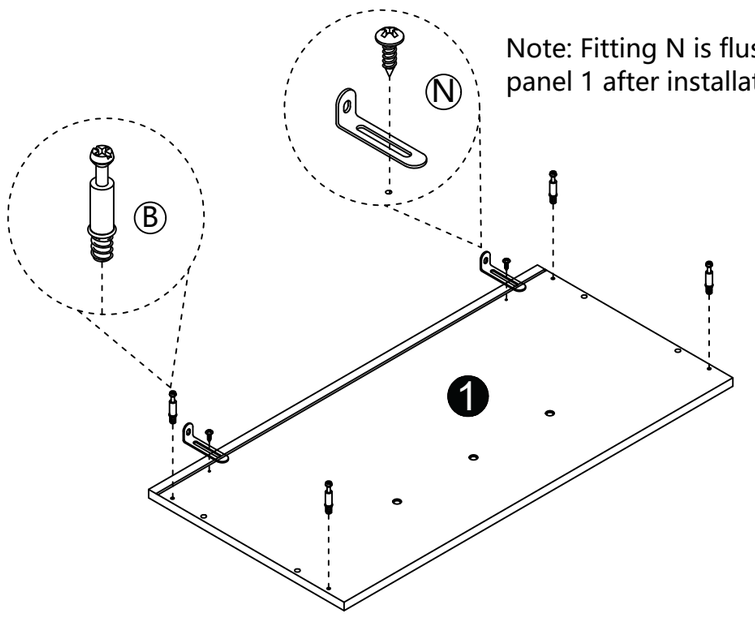

Note: Fitting N is flush with panel 1 after installation.

Step 11

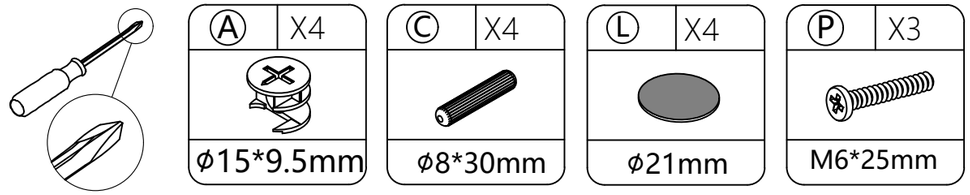

Insert accessory (C) into the holes of boards (3) and (4), align them and insert vertically into board (1). Fix with accessory (A) as shown in the figure, cover the holes with accessory (L), then pass red screw (P) through accessory (0) to connect with board (1).

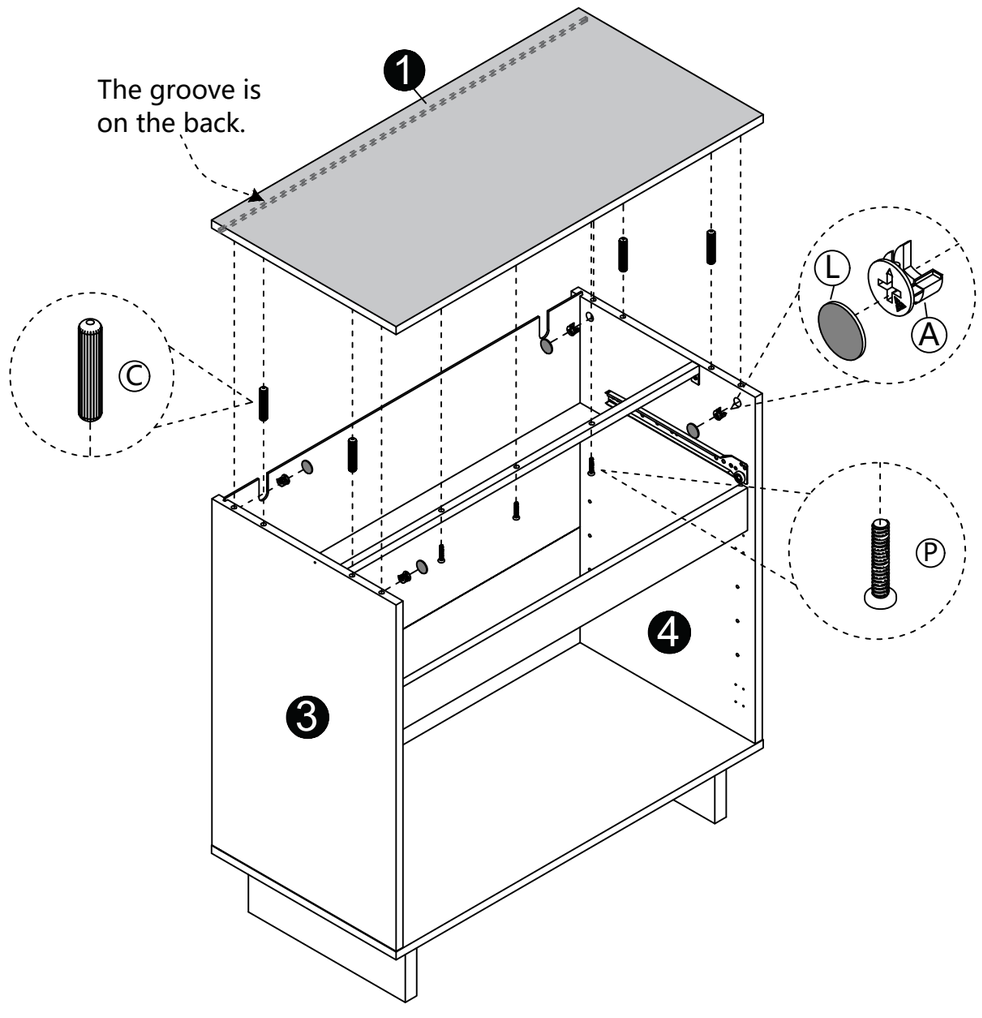

Step 12

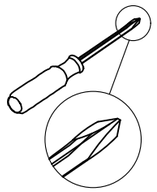

Ⓘ	X4
	ϕ5*16mm

Install accessory (I) onto the corresponding holes of boards (3) and (4), then place board (5) into the cabinet.

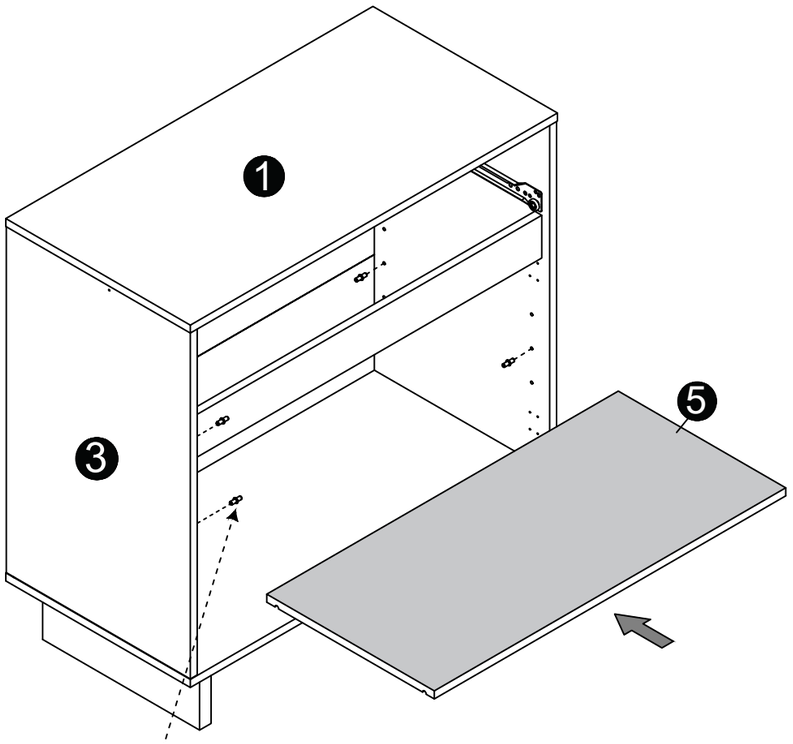

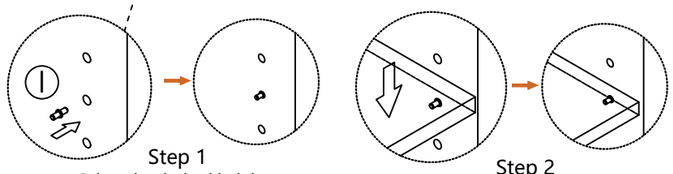

Email : **service@grandtunnel.com**

Step 13

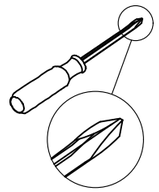

Ⓓ	X16	Ⓕ	X2	Ⓖ	X2	Ⓗ	X4
	ϕ3.5*12mm		ϕ4*19mm		ϕ20*23mm		112*43*32mm

Fasten accessory (H) to plates (11) and (12) with screw (D), then pass screw (F) through plates (11) and (12) to connect with accessory (G).

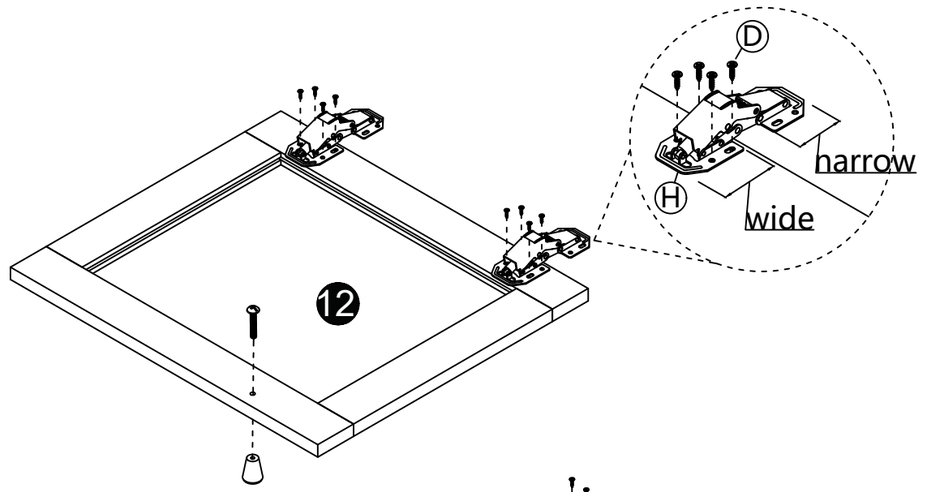

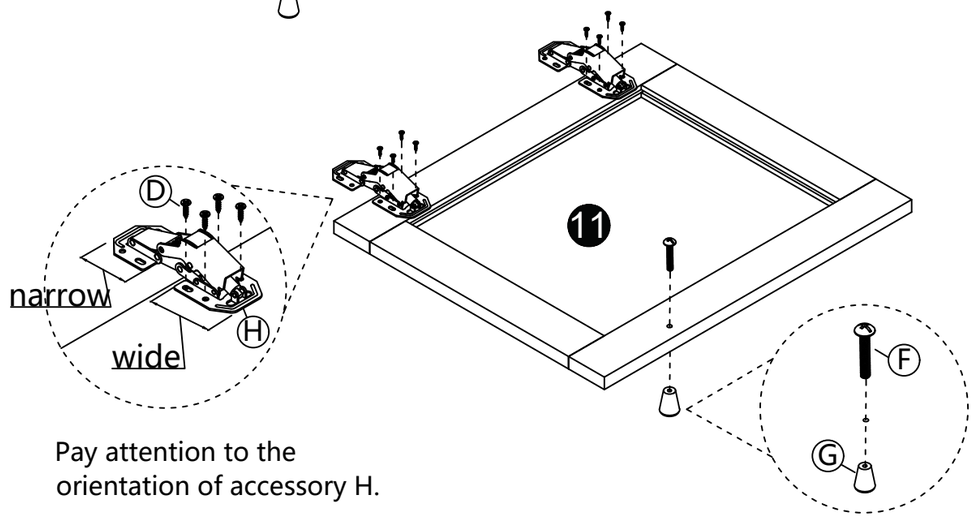

Pay attention to the
orientation of accessory H.

Email : **service@grandtunnel.com**

Step 14

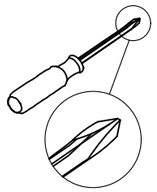

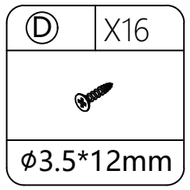

Install panel (11) on panel (3) and panel (12) on panel (4) with screw (D).

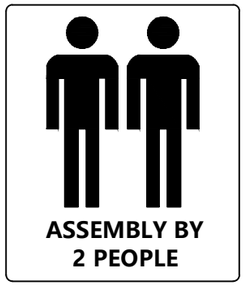

Note: This step requires two people for installation, one holding the door panel and the other securing the screws.

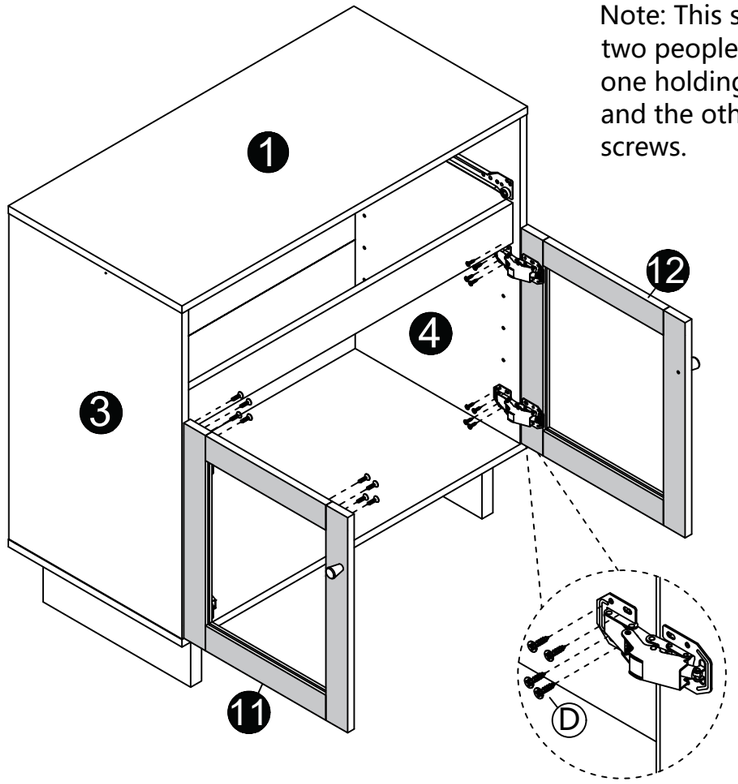

First tighten the two adjustable screws, then fasten the remaining two after they are leveled.

EN

Step 15

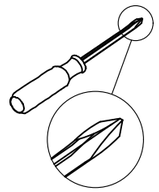

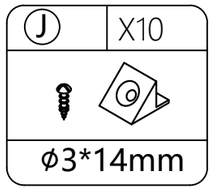

Insert the plastic buckle into the back plate slot, screw through the hole in the plastic buckle and lock it in place.

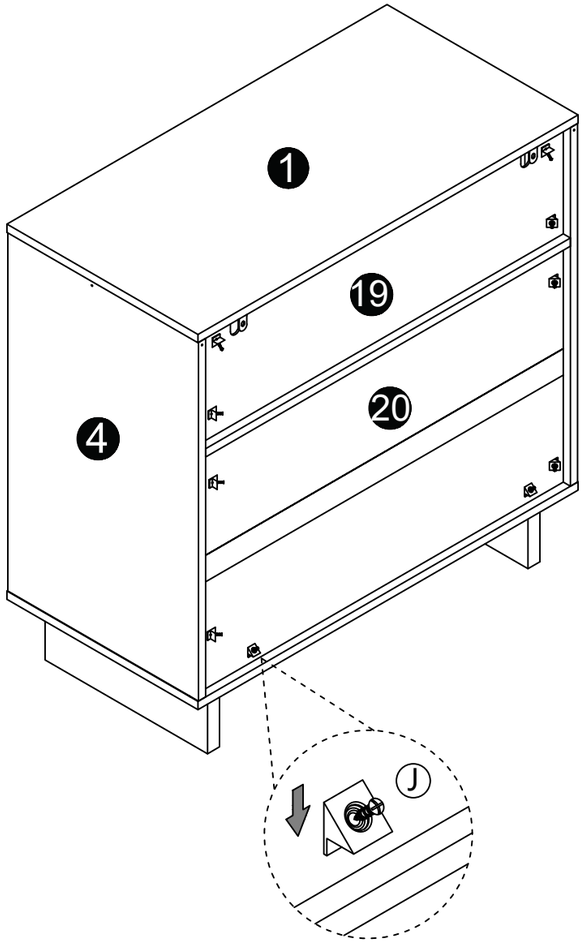

Step 16

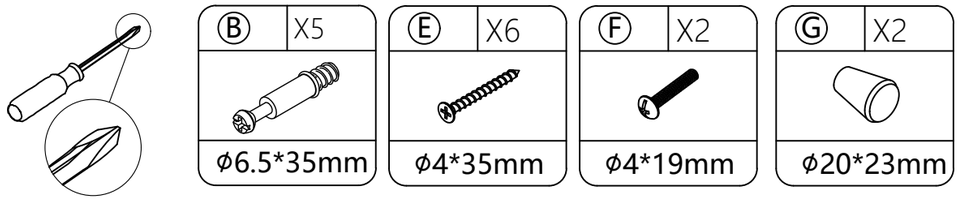

Fasten boards (14), (15), (16) and (17) together with screw (E), and insert board (18) as shown in the figure. Install accessory (B) on board (13), then pass screw (F) through board (13) to connect with accessory (G).

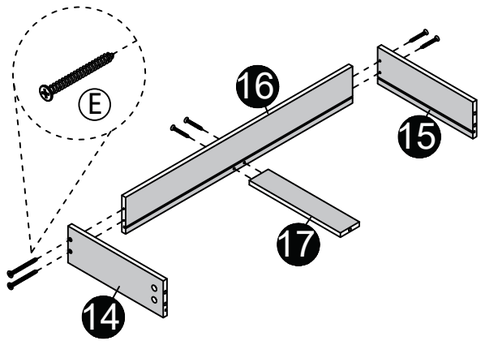

Step 1

Step 2

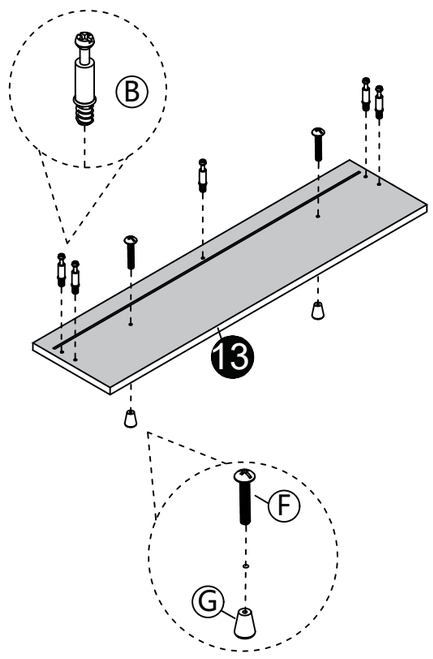

Step 3

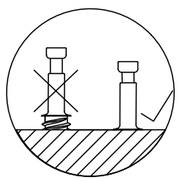

Email : **service@grandtunnel.com**

Step 17

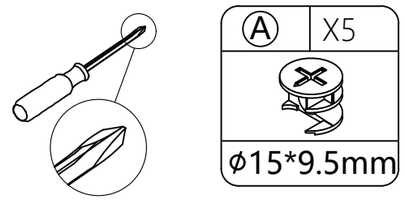

Connect board (13) with boards (14), (15) and (17), and fix with accessory (A).

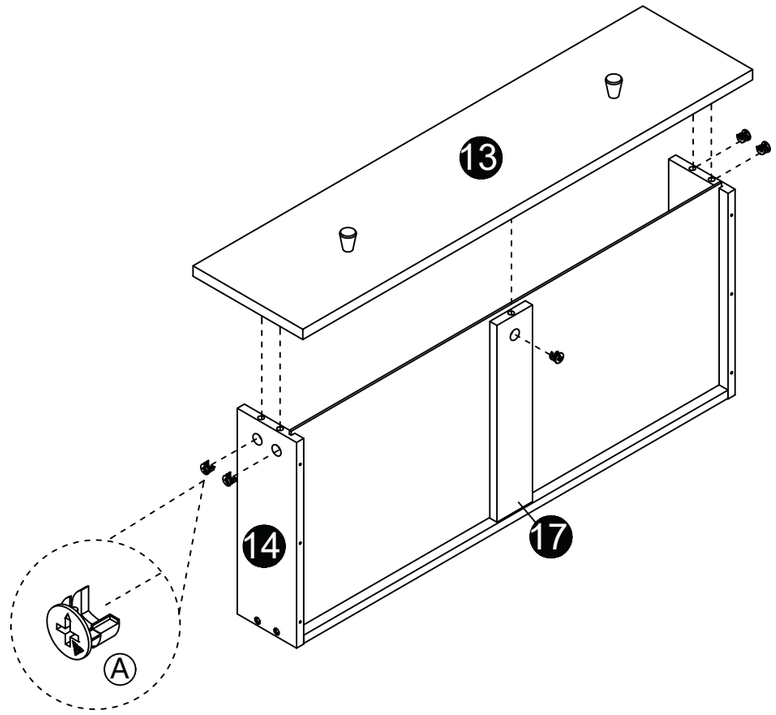

Insert the cam bolt into the hole first, then insert the cam lock and lock it.

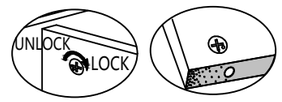

Proper orientation of CAM LOCK

Email : **service@grandtunnel.com**

EN

Step 18

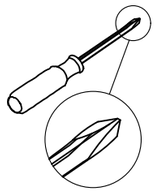

Ⓓ	X6
ϕ3.5*12mm	

Ⓜ	X1
DR	
L=300mm	

Ⓜ	X1
DL	
L=300mm	

Use screw (D) to fasten accessory (M) onto boards (14) and (15), as shown in the figure.

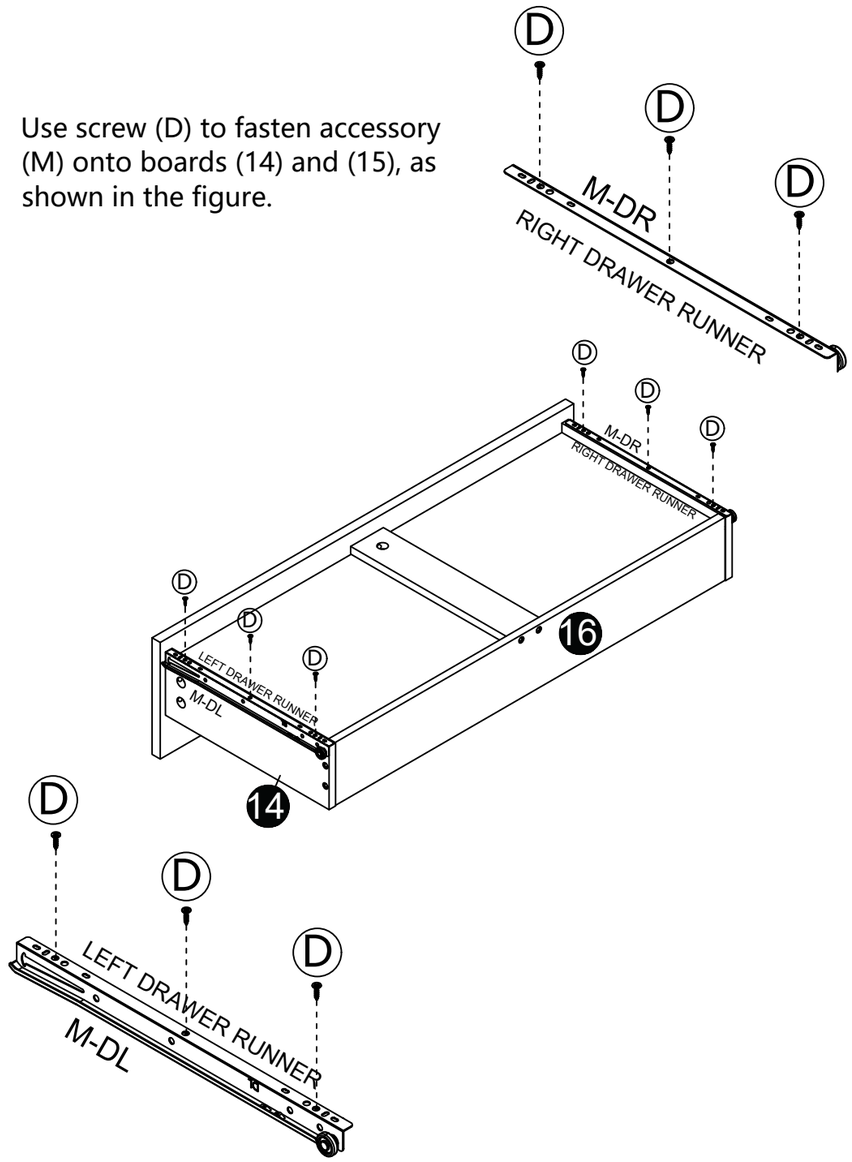

Email : **service@grandtunnel.com**

Step 19

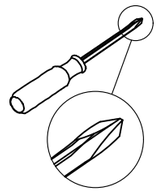

Ⓝ	X1set

⚠WARNING

Childrern have died from furuiture tipover. To reduce the risk of furniture tipover:

- ALWAYS install tipover restraint provided.
- NEVER put a TV on this product.
- NEVER allow children to stand , climb or hang on drawers , doors, or shelves.

This is a permanent label.
Do not remove !

Install the tipping restraint hard ware

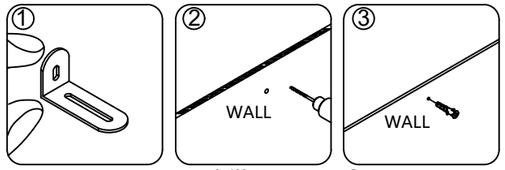

1.make mark on the wall.

2.drill two Ø6mm holes on the wall.

3.put two anchors in the holes.

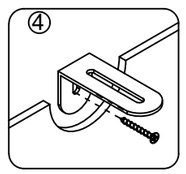

4.fix the device on the wall by the long screws.

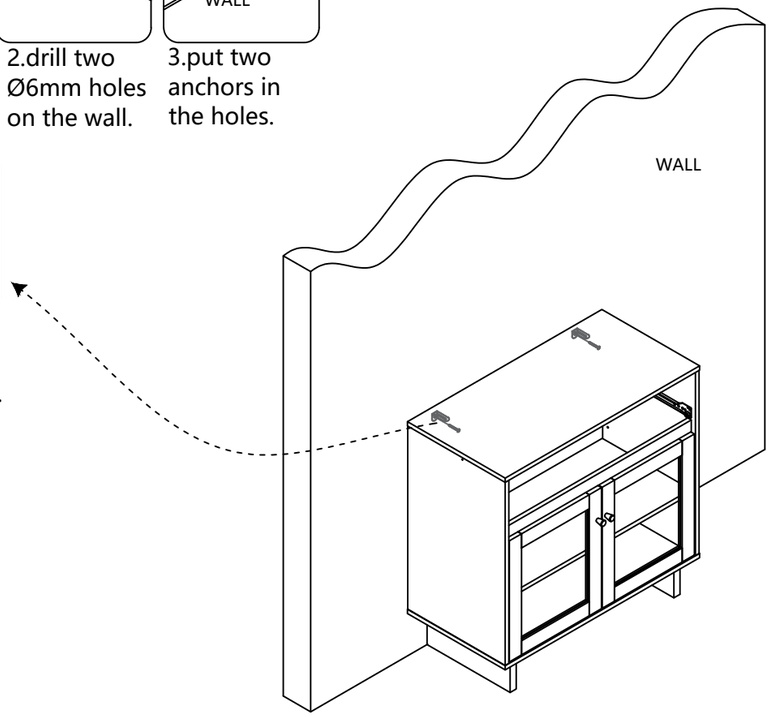

EN

Email : **service@grandtunnel.com**

EN

Step 20

Insert drawer (13) into the slide groove in alignment,
and the cabinet installation is completed.

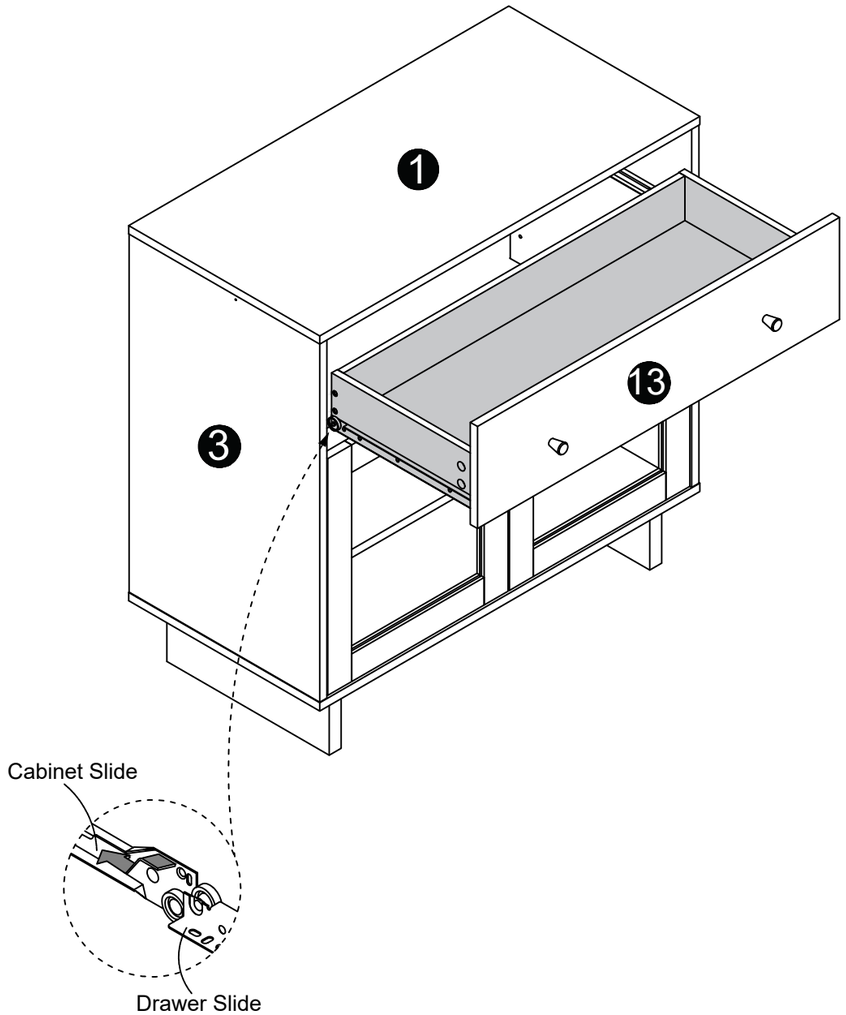

Email : **service@grandtunnel.com**