ASSEMBLY INSTRUCTION

ROUND TABLE

If you have parts missing, or have questions about assembling the table, call toll free
We will help you.

Read these instructions carefully. Refer to hardware and furniture parts list for guidance. Make sure all parts are available prior to assembling. Place all wooden furniture parts on a clean and flat soft surface to prevent scratches. Refer steps provided as assembling guide.

PART LIST		
ITEM	DESCRIPTION	QTY
A	Table Top	1PC
B	Table Leg	1PC

HARDWARE LIST		
ITEM	DESCRIPTION	QTY
1	SCREW M8*65MM	4 PCS
2	WASHER	4 PCS
3	ALLEN WRENCH	1 PC

A

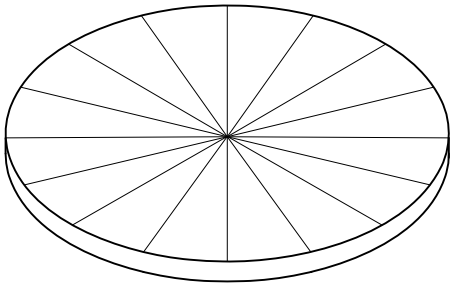

B

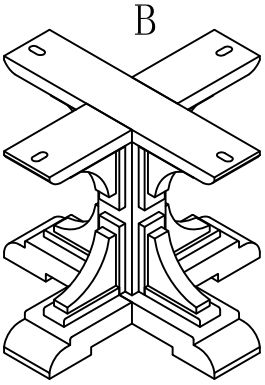

STEP 1

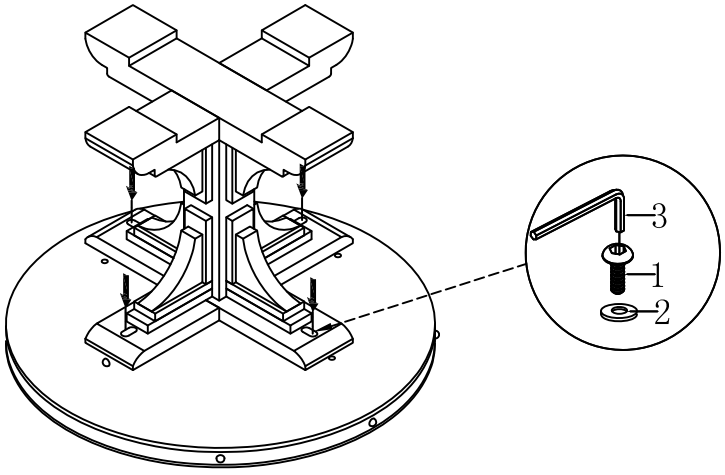

THE END

