Ortello Home



THANK YOU !

Limited Warranty

OrtelloHome products are warrantied to be free from defects in materials and workmanship for one year from the date of original purchase.

If you believe your product is defective, damaged, or missing any parts, please contact our Customer Service Department by phone or email and they will assist in providing the replacement parts needed.

Prior to contacting us, please make sure you have the following:

- Order number or Purchase Order number
- Manufacturer model number
- Description of the defect, damaged, and/or missing parts

For parts requests, please include any images of the defective/damaged part(s). Following the replacement request procedures will help our customer service representatives process your request quicker. If the part request is due to a missing part in your order, please refer to the instruction manual for parts identifcation, or let our team know and they can assist you with finding the correct part name or number.

Please refrain from returning the product to us unless specifically instructed to do so. If a return is necessary, it must be processed through the original store of purchase, and proof of purchase must be provided. The return or exchange policy may vary depending on the specific store from which the order was placed. Please contact the store of purchase directly for assistance.

Note: *This warranty does not cover typical wear-and-tear. Replacement parts will be shipped using standard ground service.*

OrtelloHome *is not liable for any consequential damages resulting from the purchase or use of our products, nor for any personal injury or property damage arising from product use. Under this warranty, our liability is limited to the replacement of defective parts as outlined above.*

Copyright by: OrtelloHome and its afiliates.

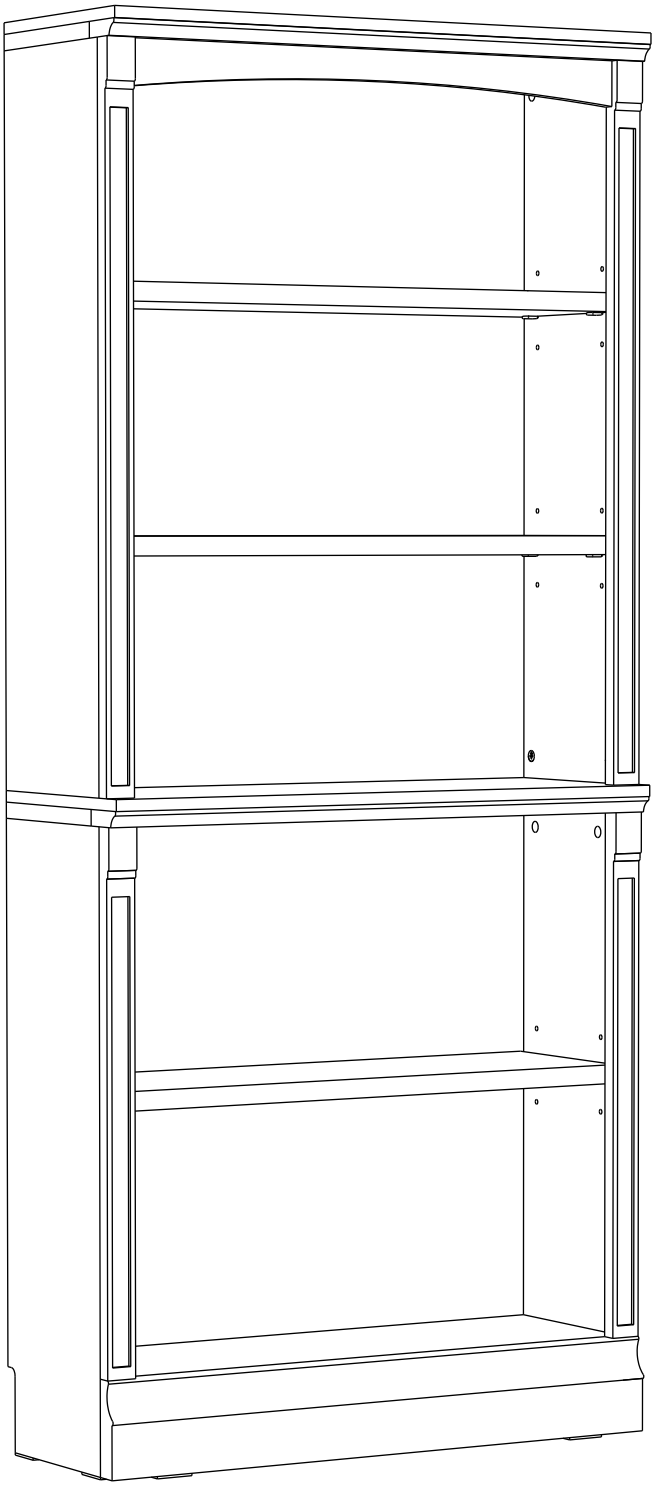

ZANE STANDARD BOOKCASE

MODEL# ZABKSDDC

INSTRUCTION MANUAL

Ortello Home

ZANE STANDARD BOOKCASE
MODEL# ZABKSDDC

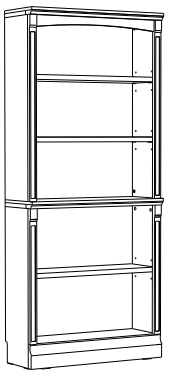

Instructions

Do not tighten bolts completely until the product is fully assembled

Ⓐ ×1 pc

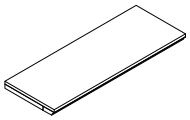

Ⓑ ×1 pc

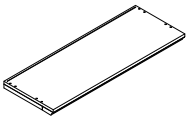

Ⓒ ×1 pc

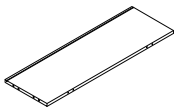

Ⓓ ×1 pc

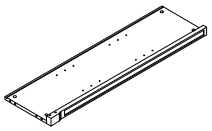

Ⓔ ×1 pc

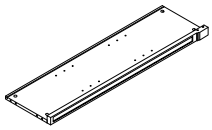

Ⓕ ×1 pc

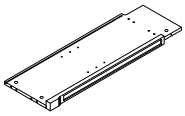

Ⓖ ×1 pc

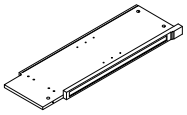

Ⓗ ×1 pc

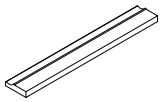

Ⓘ ×1 pc

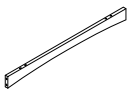

Ⓙ ×3 pc

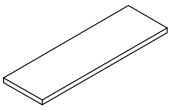

Ⓚ ×1 pc

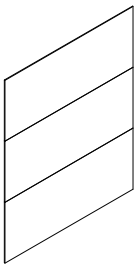

Ⓛ ×1 pc

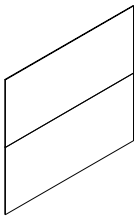

(Scan to assembly video)

CAUTION: Do not use power screwdriver.

PACKAGE CONTENTS

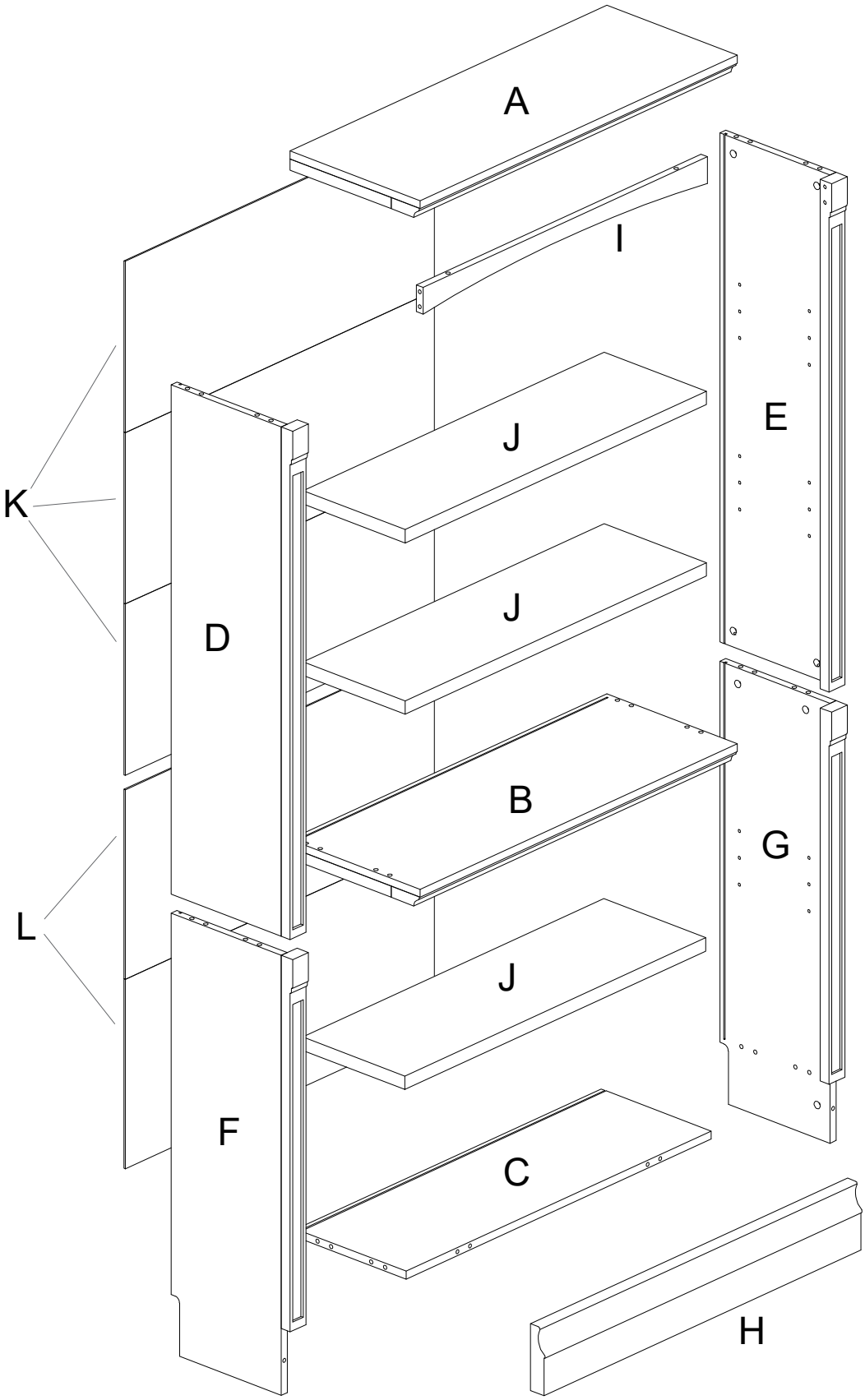

TOOL: Phillips screwdriver required.

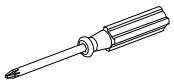

HARDWARE

aa ×24 pcs
(+2pcs)

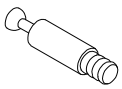

bb ×24 pcs
(+2pcs)



cc ×22 pcs
(+2pcs)

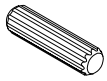

dd ×12 pcs
(+1pcs)

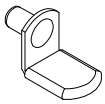

ee ×14 pcs
(+1pcs)

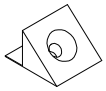

ff ×14 pcs
(+1pcs)



gg ×2 pcs

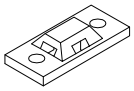

hh ×2 pcs

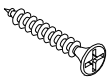

ii ×2 pcs

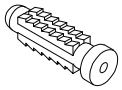

jj ×2 pcs



kk ×1 pcs

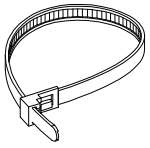

ll ×1 pcs

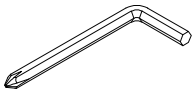

mm ×1 pcs

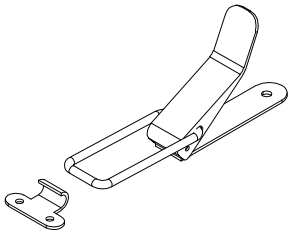

nn ×4 pcs



*NOTE: Spare hardware included.

CAUTION: Do not use power screwdriver.



How to use 3-in-1 Eccentric Hardware Wheels

1

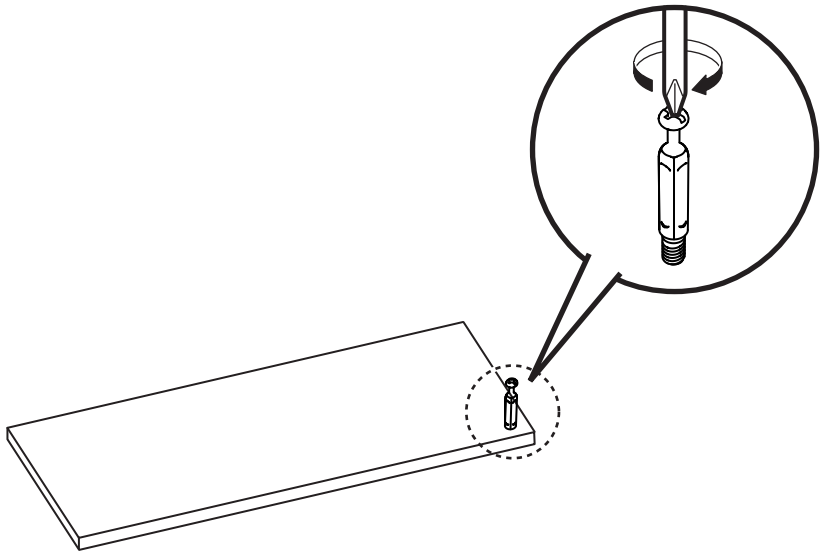

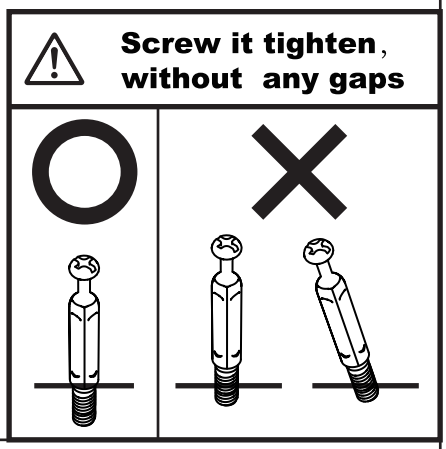

2

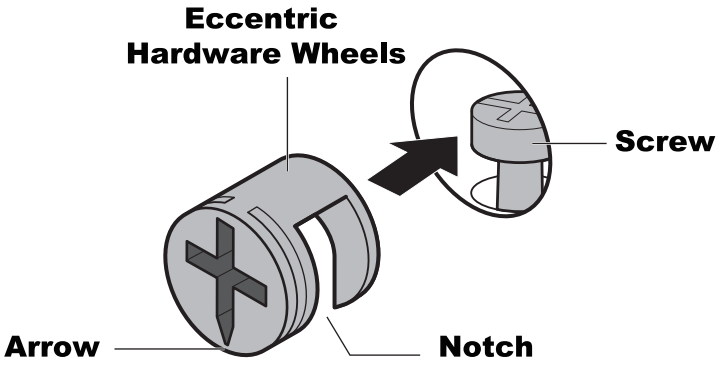

3

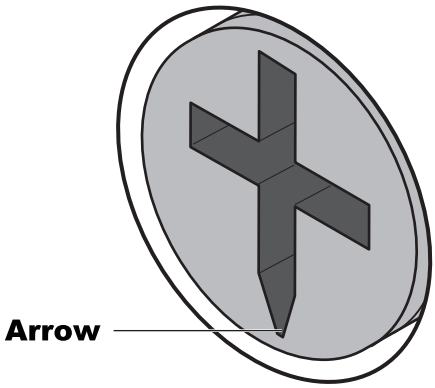

4

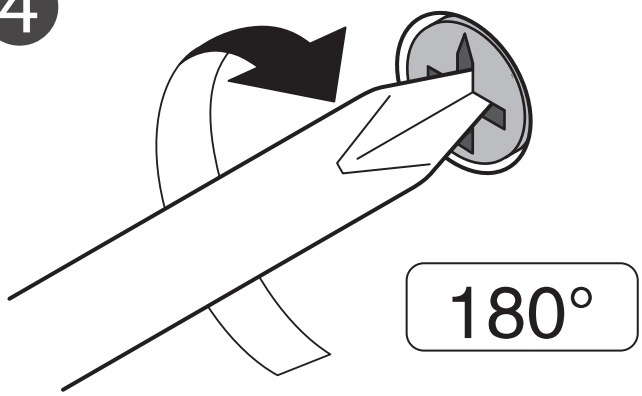

5

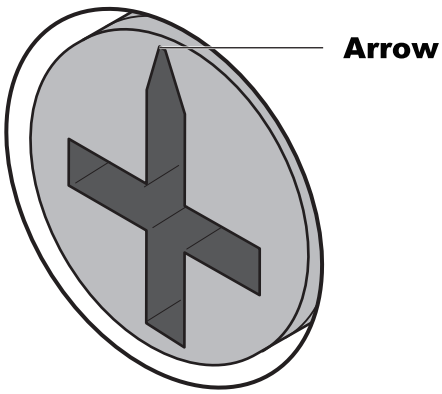

1

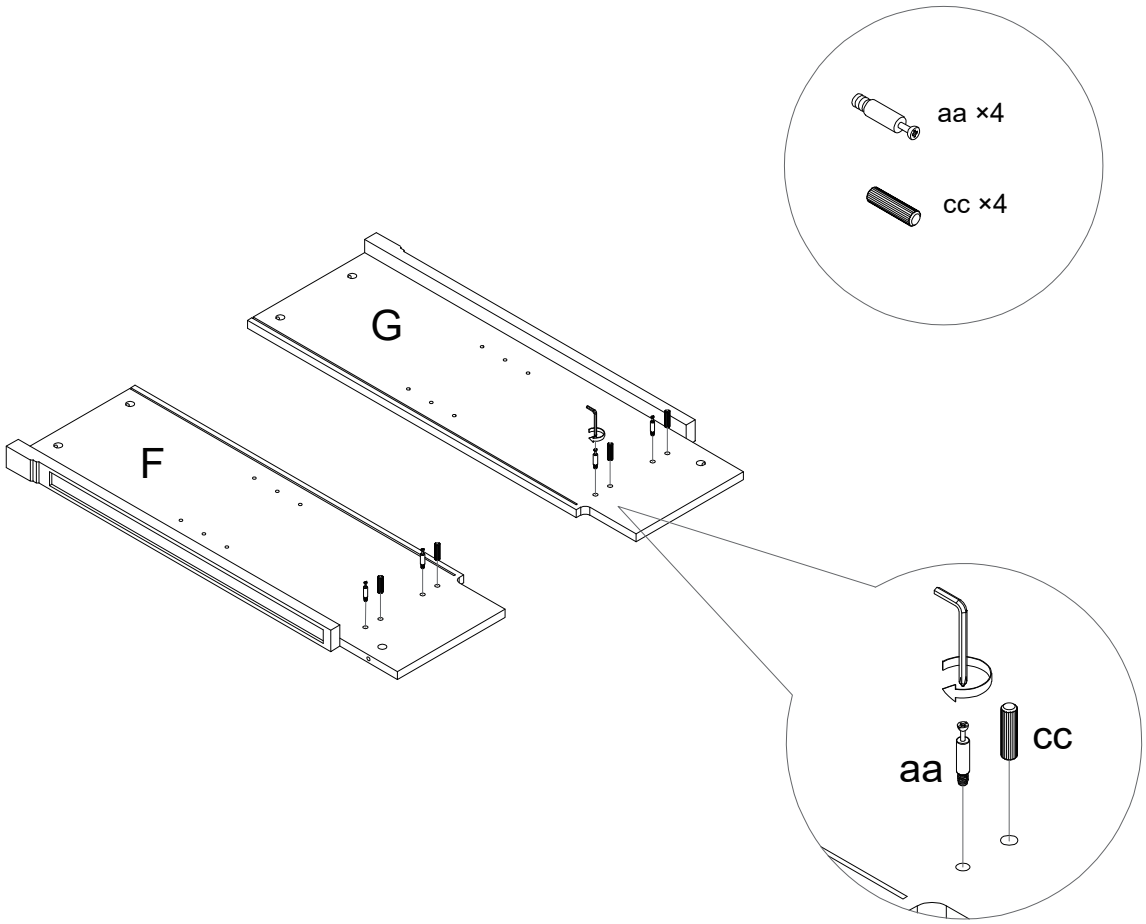

2

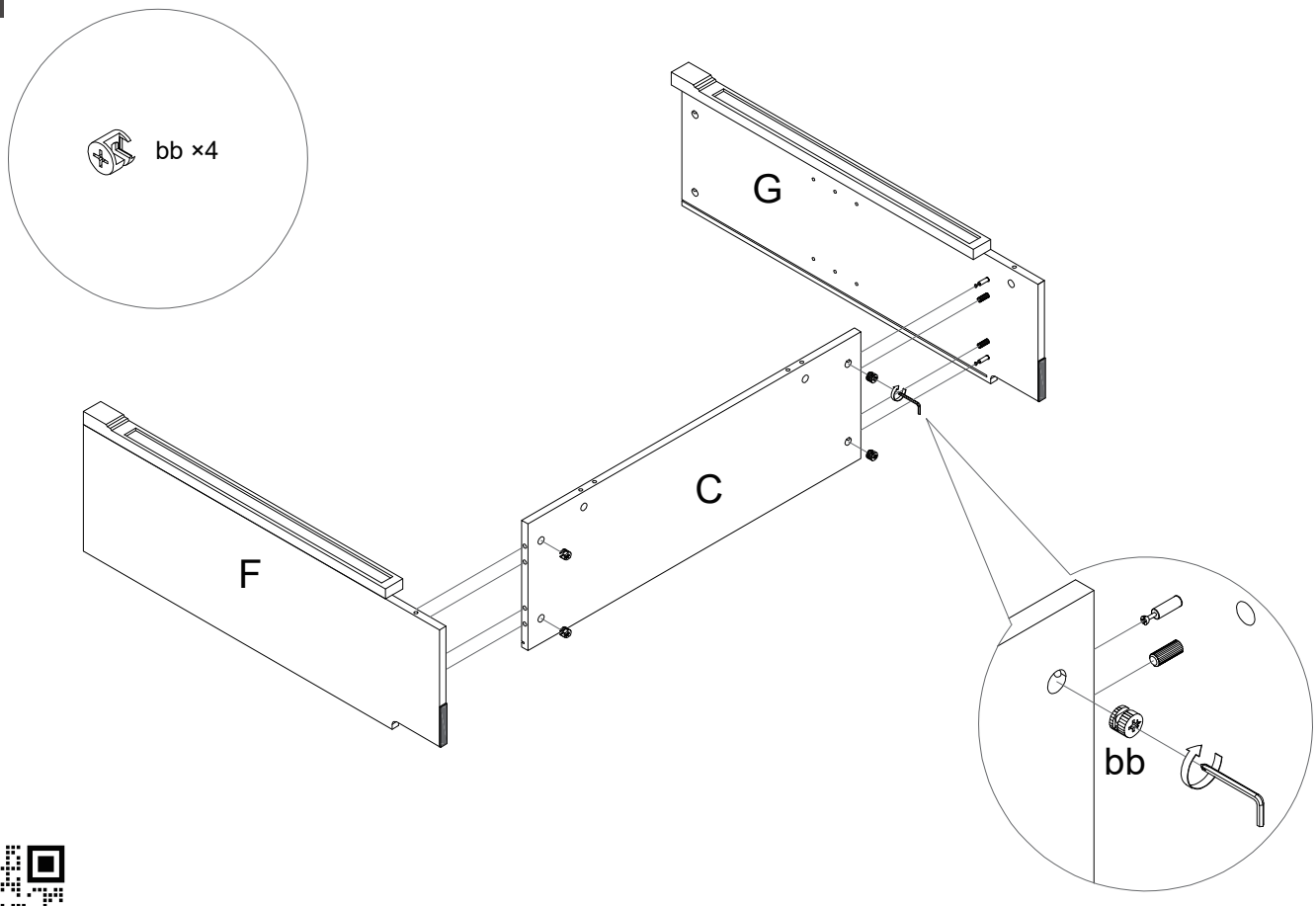

(Scan to assembly video)

CAUTION: Do not use power screwdriver.

3

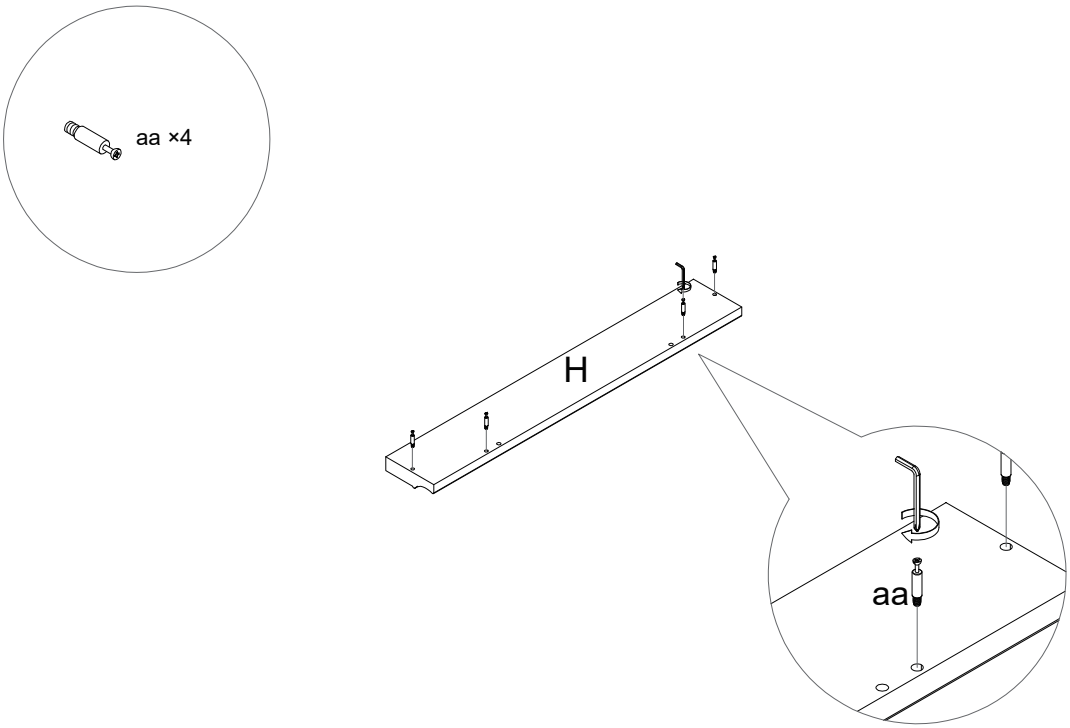

4

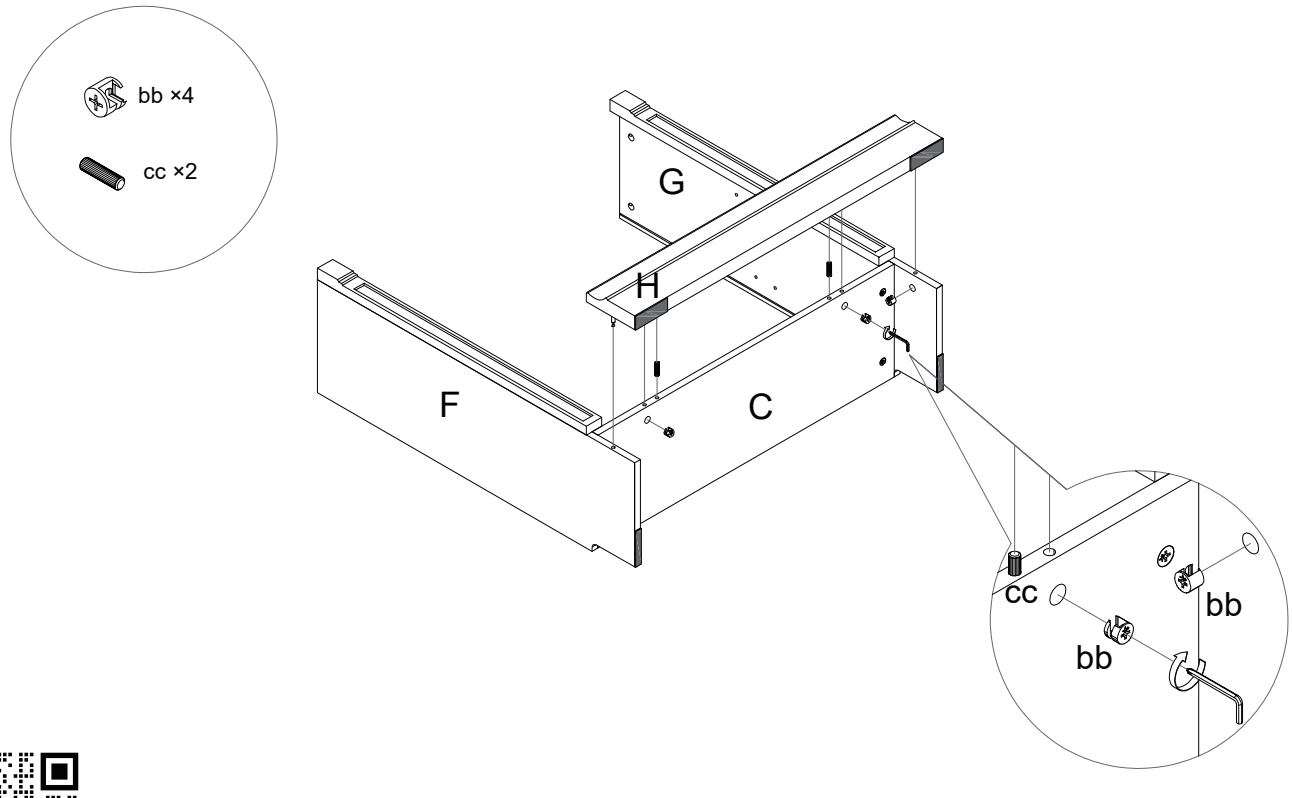

(Scan to assembly video)

CAUTION: Do not use power screwdriver.

5

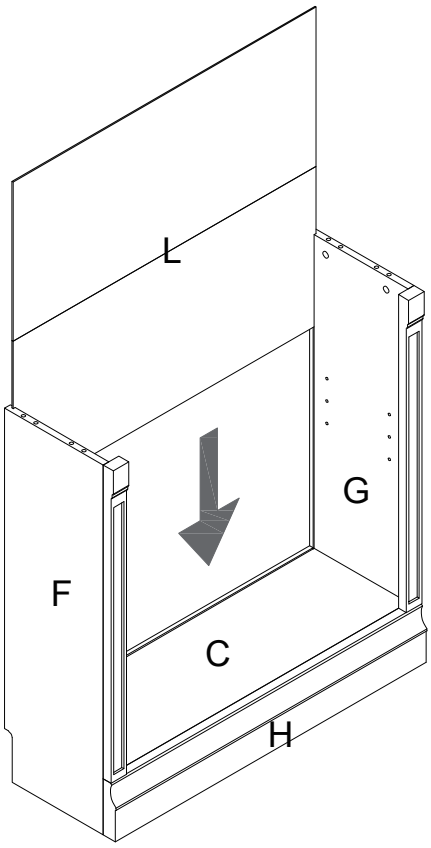

6

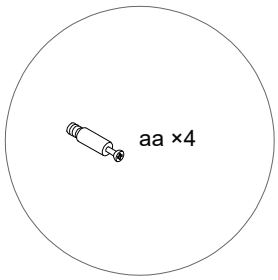

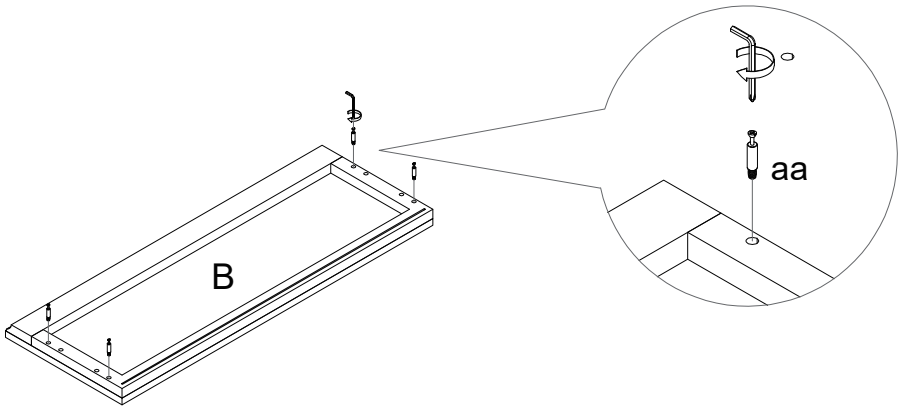

(Scan to assembly video)

CAUTION: Do not use power screwdriver.

7

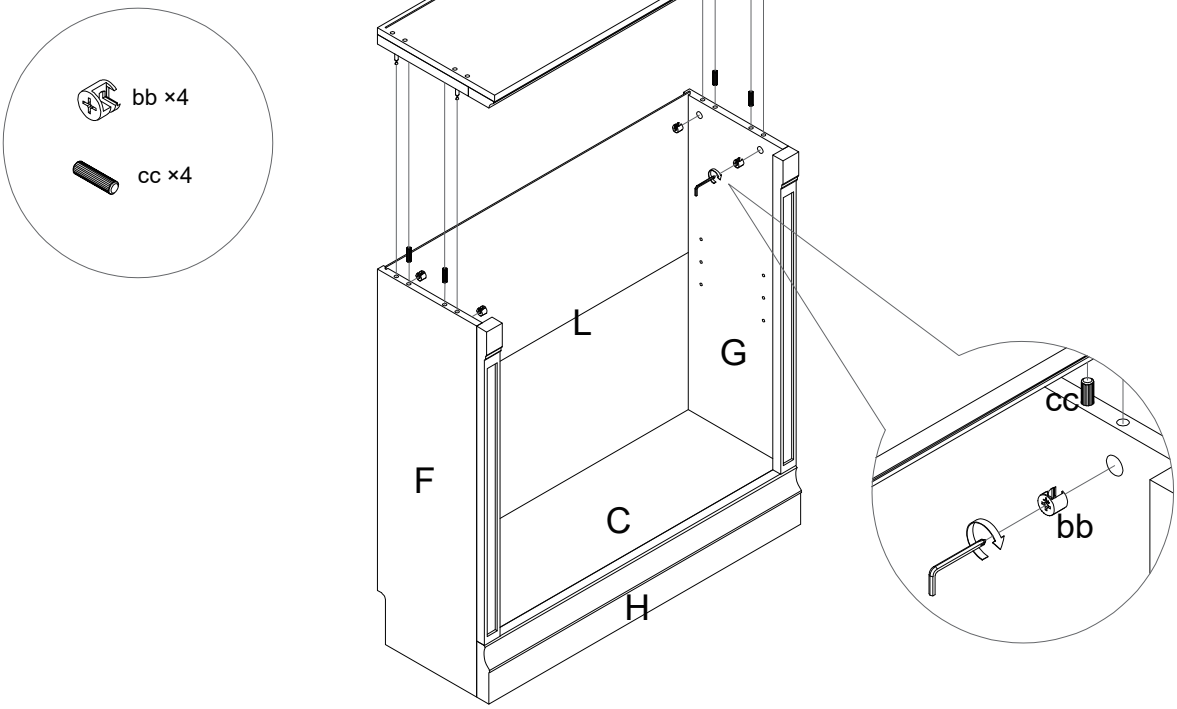

8

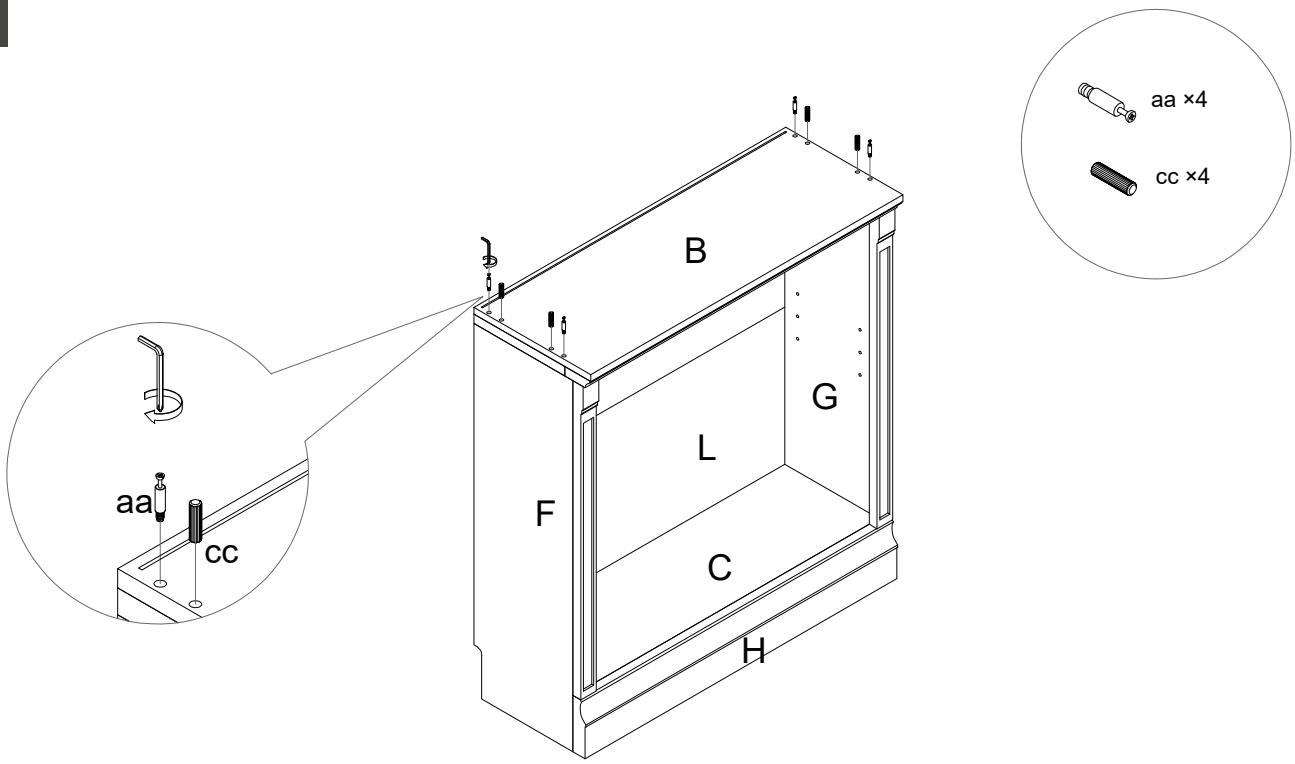

(Scan to assembly video)

CAUTION: Do not use power screwdriver.

9

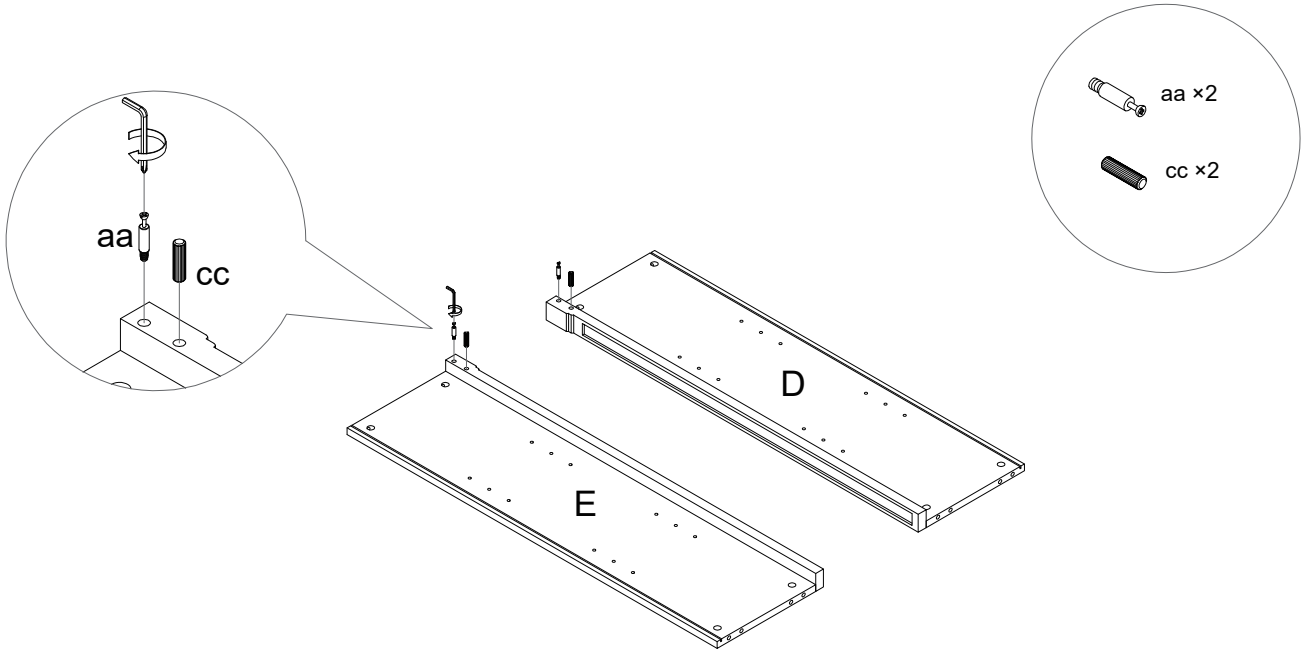

10

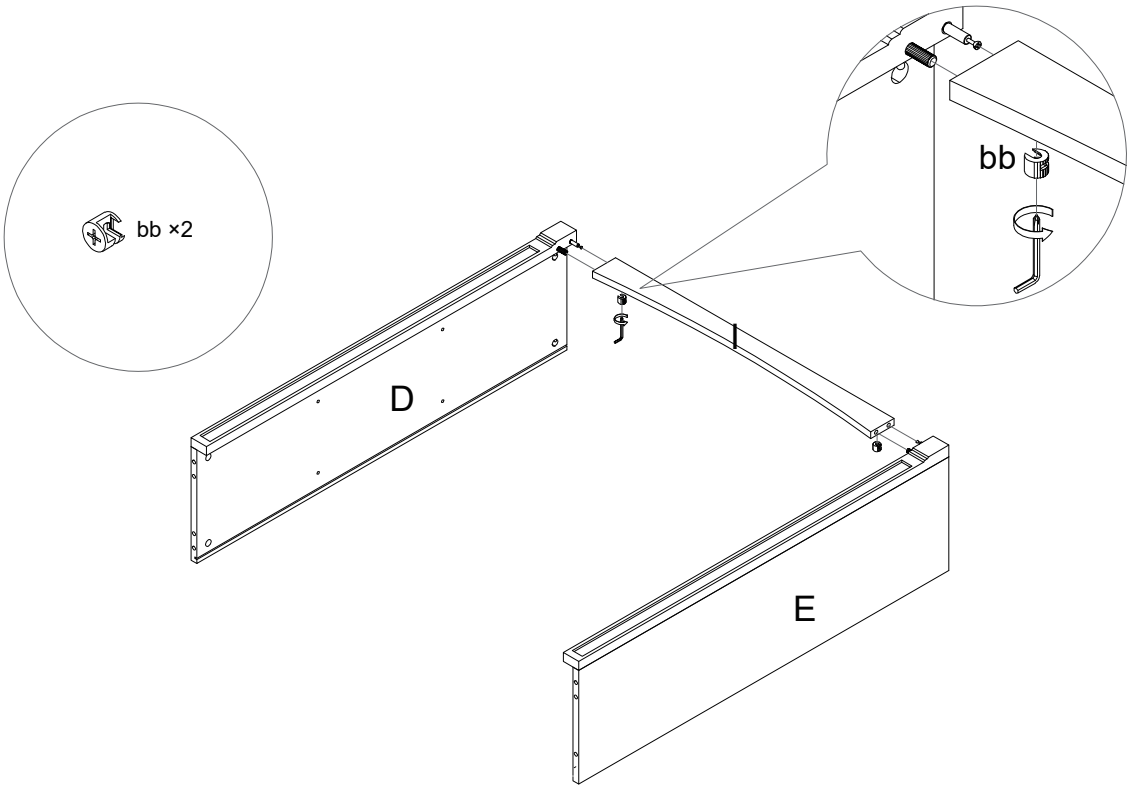

(Scan to assembly video)

CAUTION: Do not use power screwdriver.

11

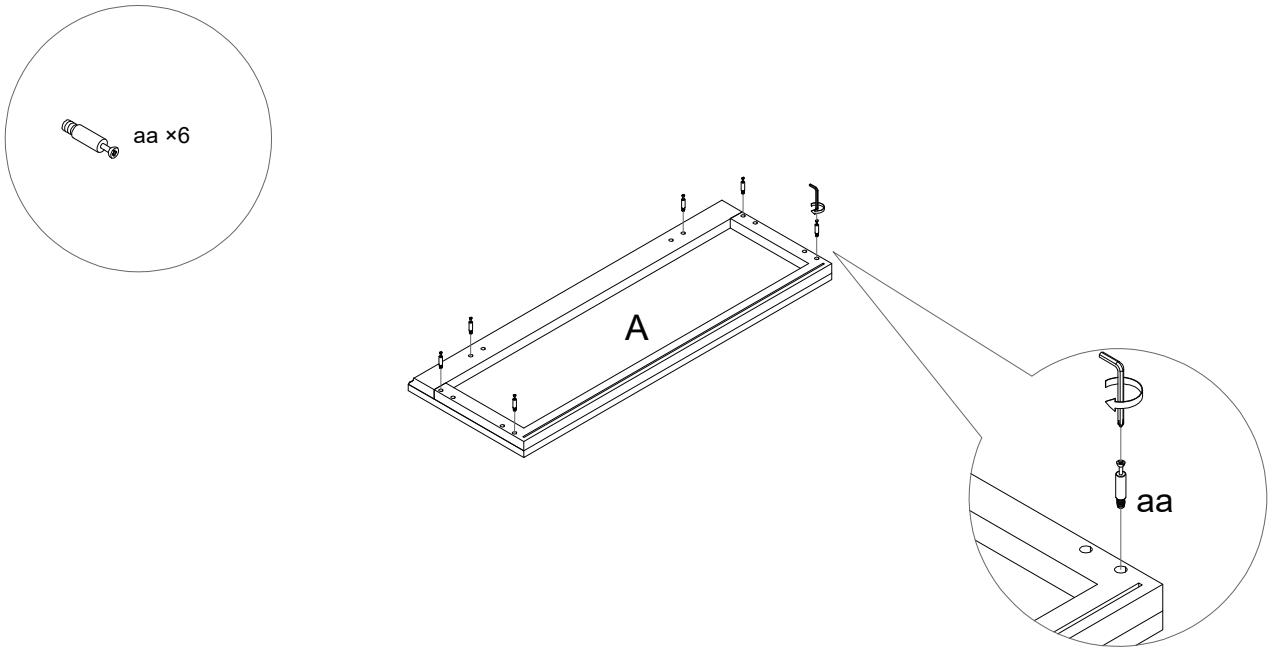

12

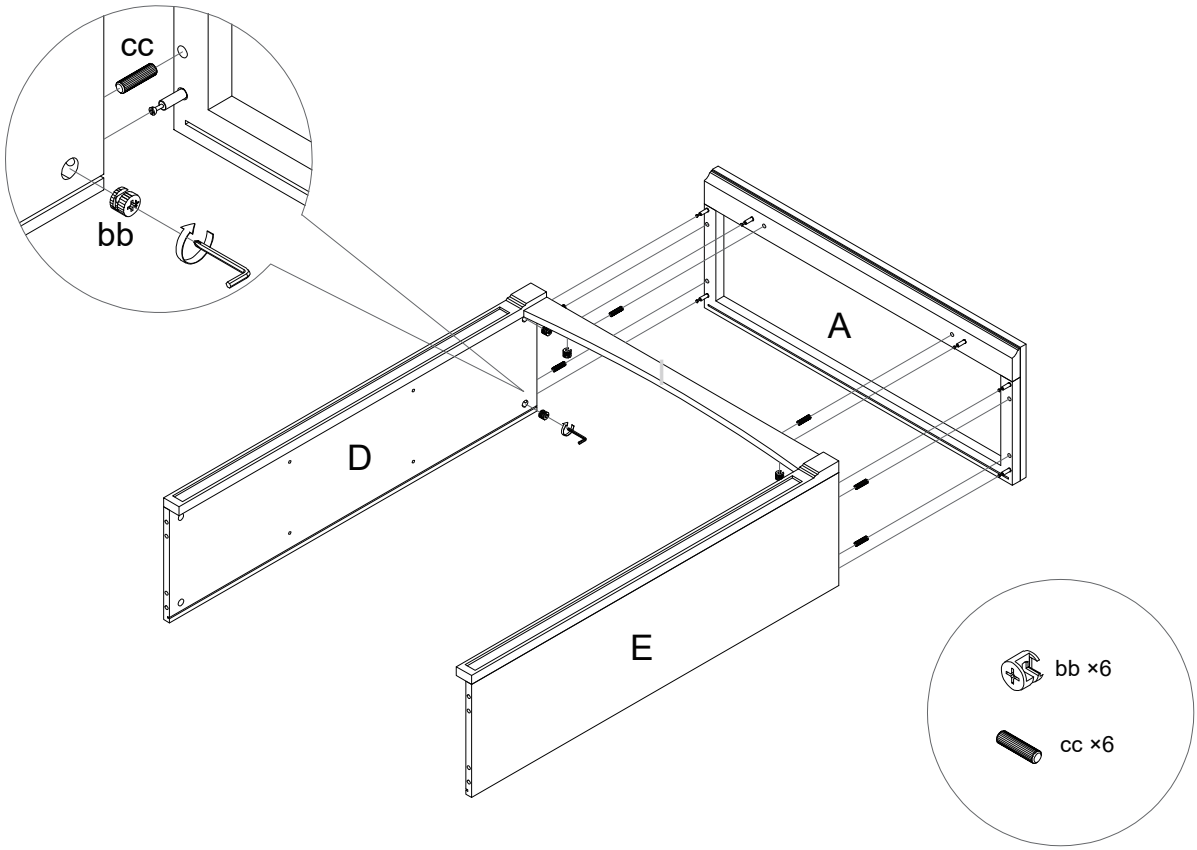

(Scan to assembly video)

CAUTION: Do not use power screwdriver.

13

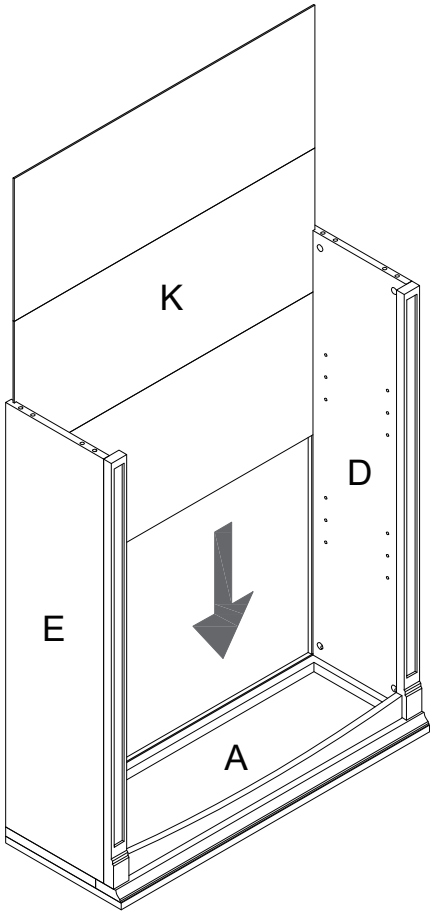

14

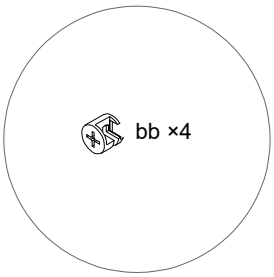

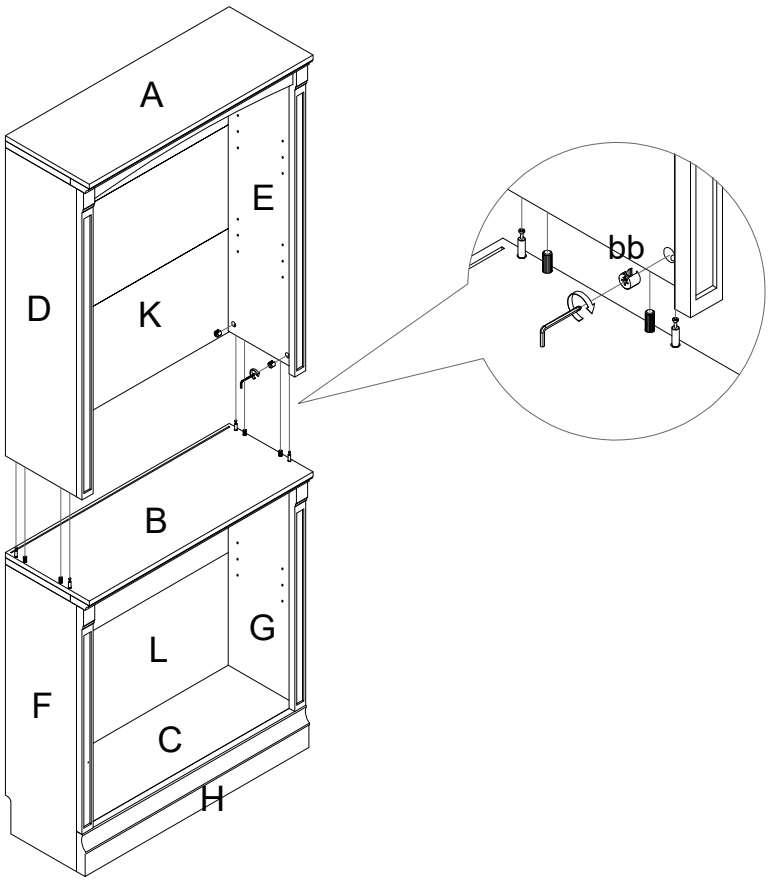

(Scan to assembly video)

CAUTION: Do not use power screwdriver.

15

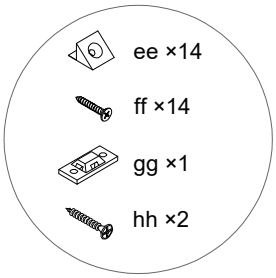

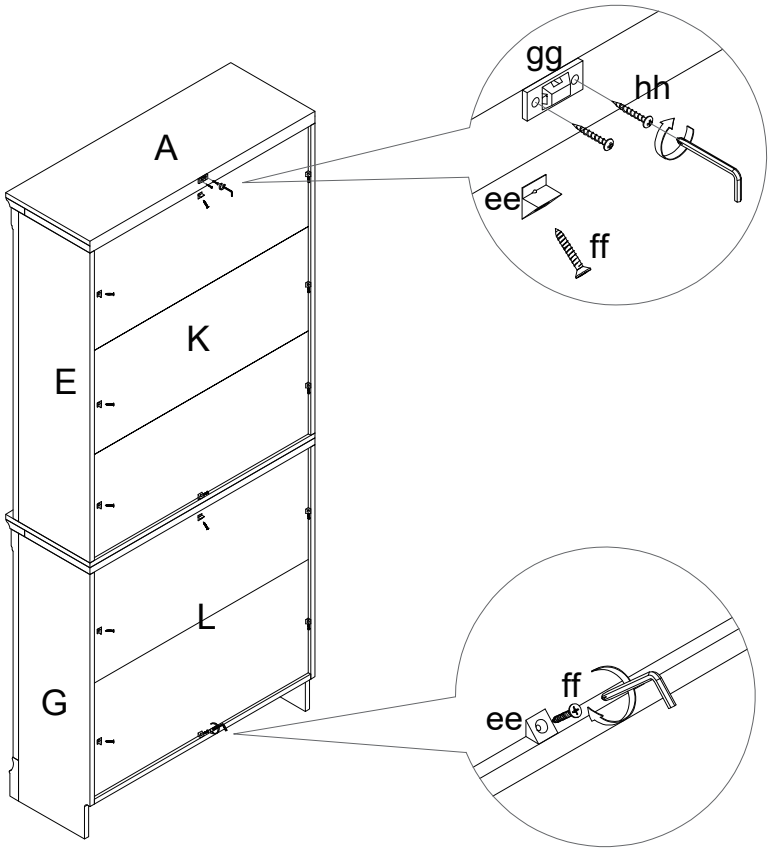

16

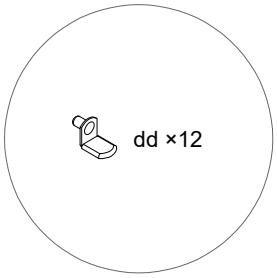

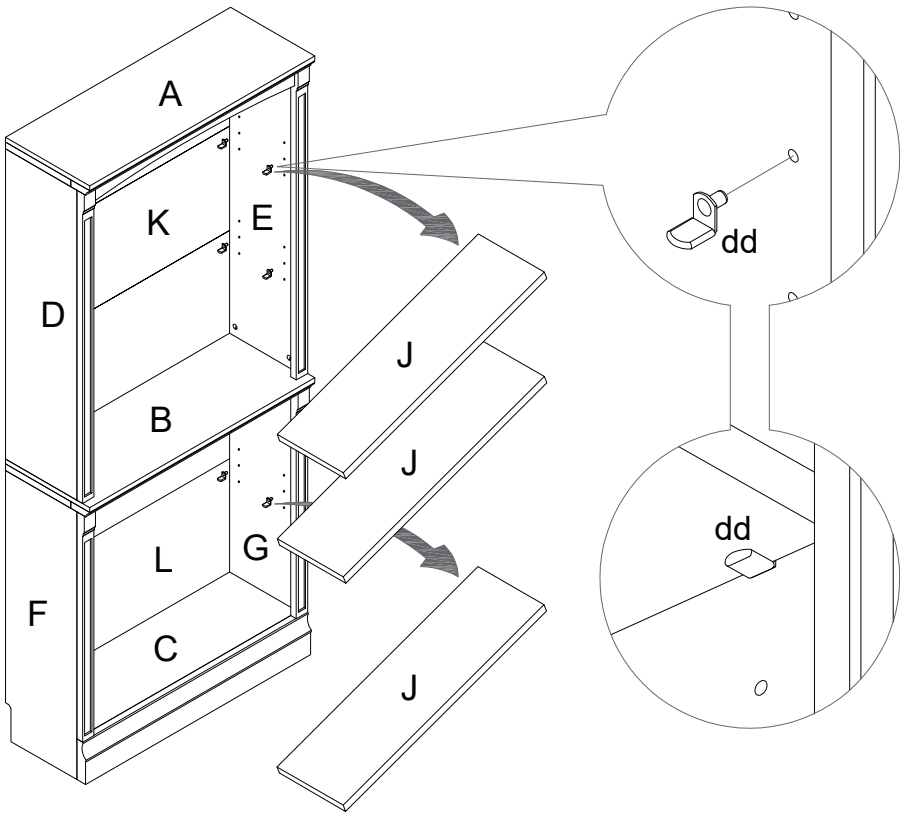

(Scan to assembly video)

CAUTION: Do not use power screwdriver.

17

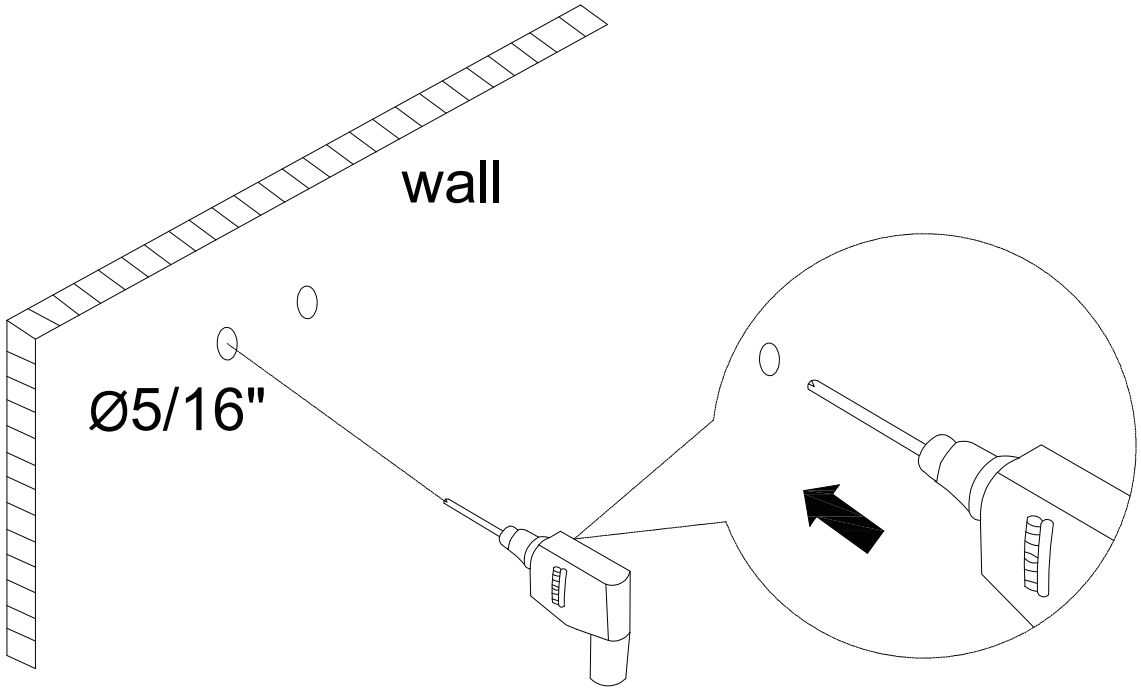

18

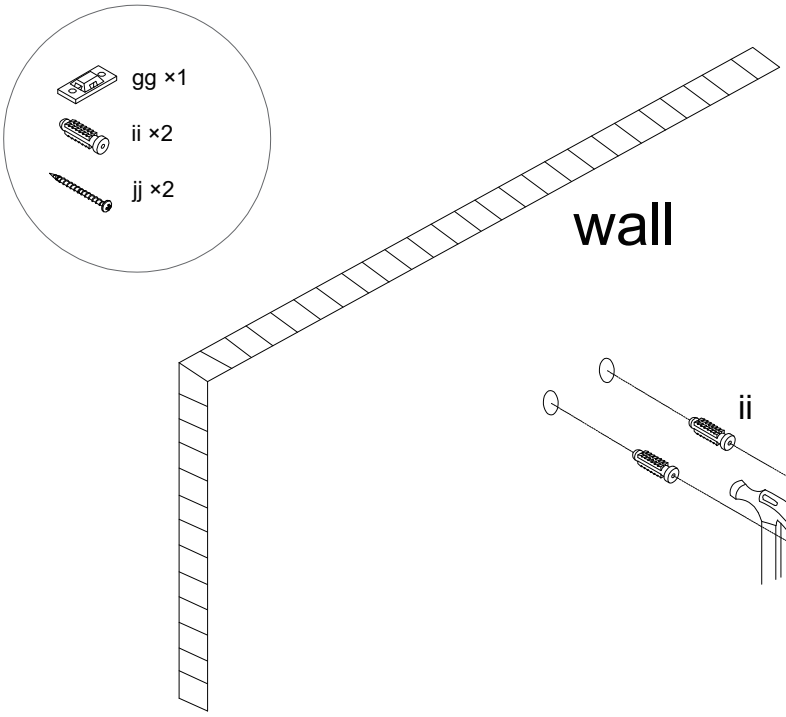

(Scan to assembly video)

CAUTION: Do not use power screwdriver.

19



(Scan to assembly video)

CAUTION: Do not use power screwdriver.

20

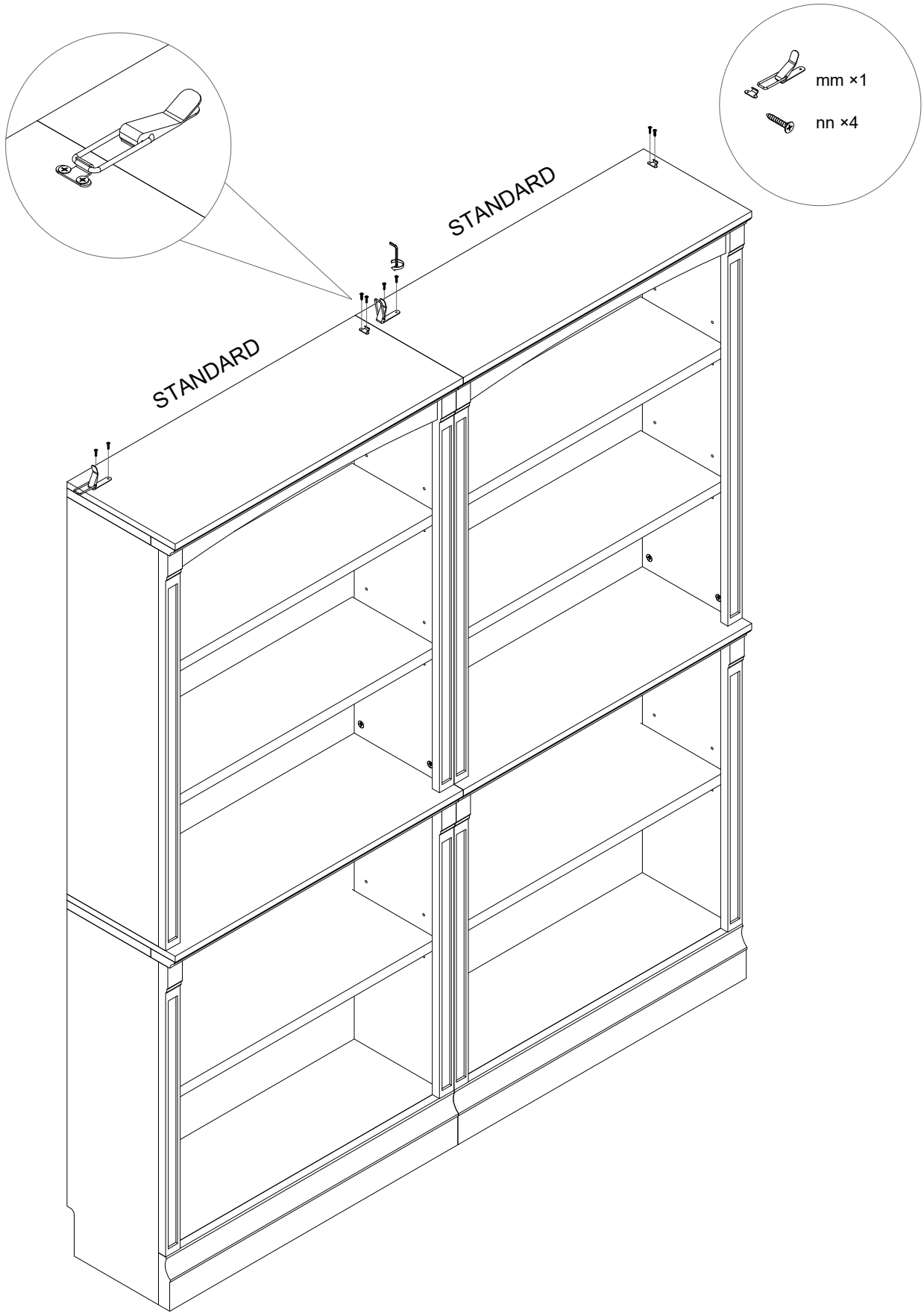

(Scan to assembly video)

CAUTION: Do not use power screwdriver.

STYLE YOUR HOME WITH OUR ZANE MODULAR BOOKCASE COLLECTION

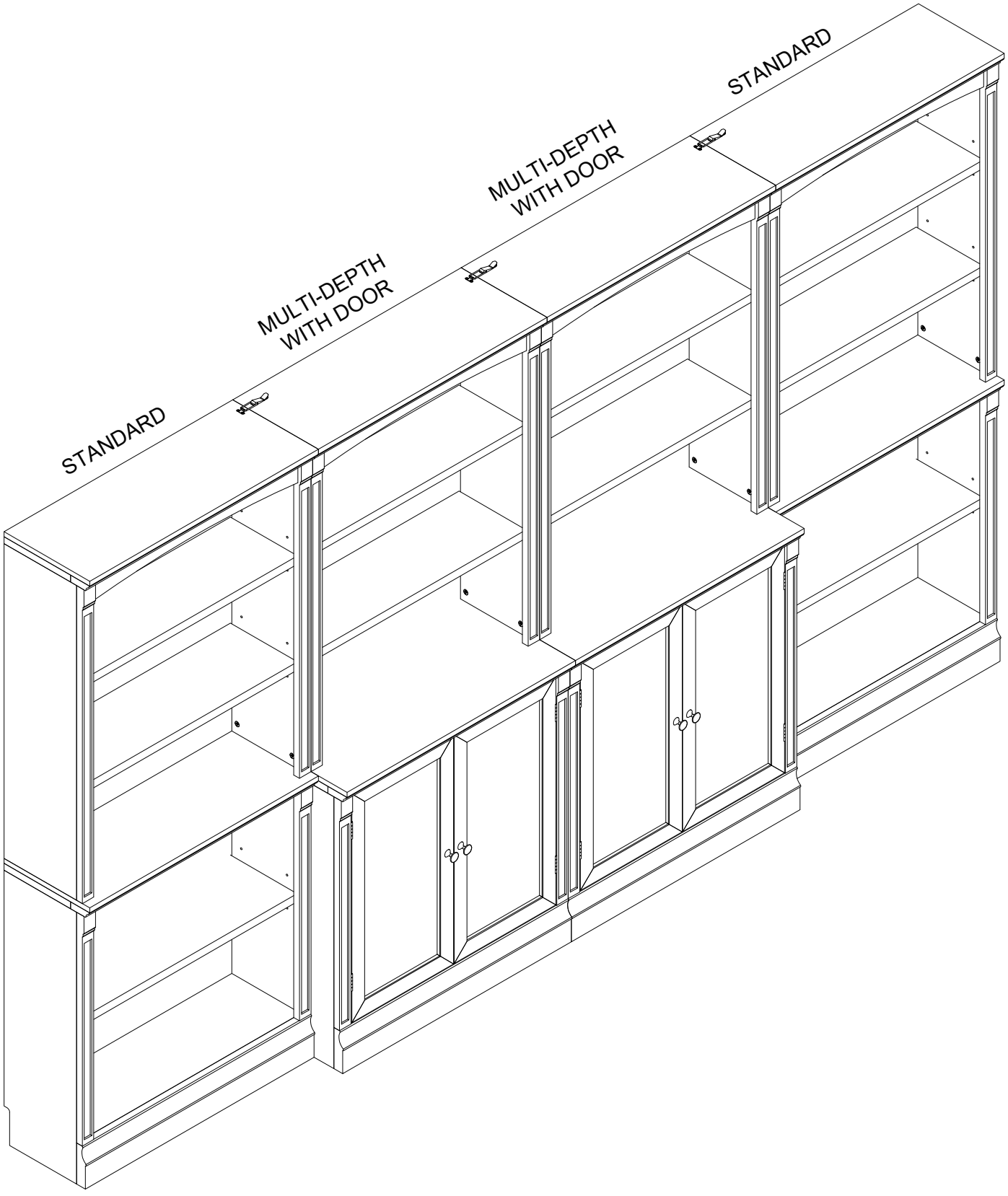

(Scan to assembly video)

CAUTION: Do not use power screwdriver.

Ortello Home

We sincerely hope you will enjoy our products and share your feedback !

If you have any question
please feel free to contact us !

Warm Regards
Ortello Home Support Team

ESSENTIAL LINK CORP
Diamond Bar, CA

service@ortellohome.net
(We will reply within 24 hours)

(Scan to assembly video)

(Scan to Ortello Home)