Assembly Instructions

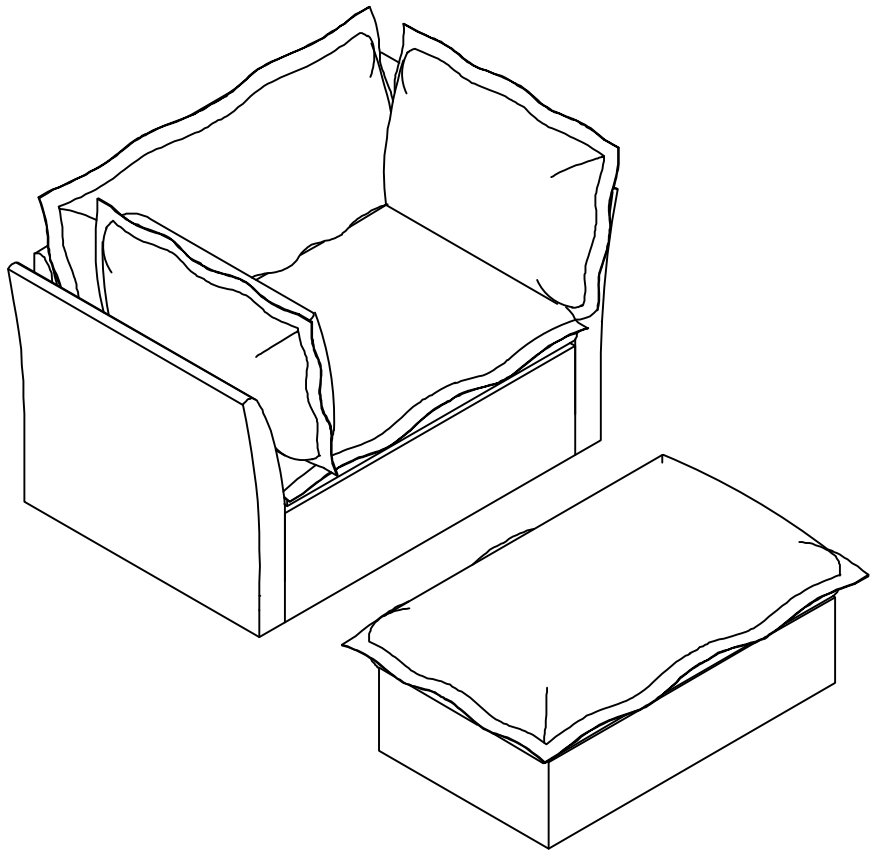

IMPORTANT NOTE

**Place all parts on a lean and smooth surface such as a rug or carpet to avoid the parts from being scratched.
**Before you begin, please review the assembly instruction step by step.
**Return & Warranty Policy:
-We strive to offer the highest quality products. We also provide positive solutions with replacements or refund if needed.
-If the item is damaged or defective, please take photos to show the problem and email to the seller.
-Please do not return back the product before contact the seller.

PART LISTS BOX 1

Part NO.	Part Image	Part Name	QTY
①	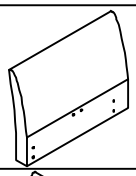	Left Armrest	1
②	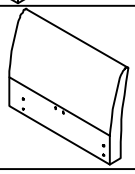	Right Armrest	1
③	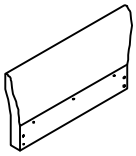	Backrest	1
④	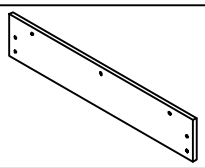	Bezel	1
⑤	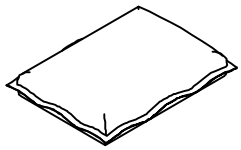	Sofa Seat Cushion	1
⑥	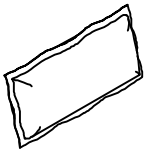	Back Cushion	1
⑦	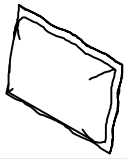	Armrest Cushion	2
⑧	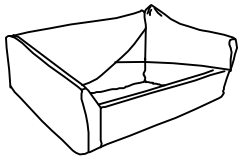	Sofa Slipcover	1
⑨	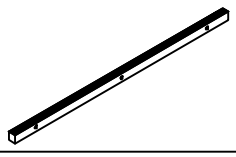	Pine Strip	4
⑩	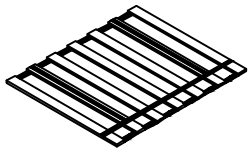	Sofa Batten	1

Part NO.	Part Image	Part Name	QTY
⑪	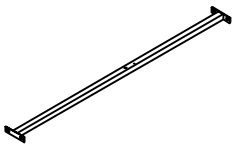	Middle iron support bar	2
⑫	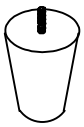	Plastic Foot	8
⑬	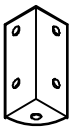	Foot hardware	8
⑭	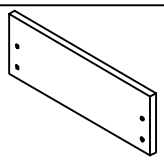	Short Side Panel	2
⑮	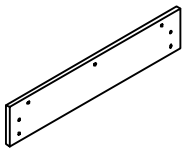	Long Side Panel	2
⑯	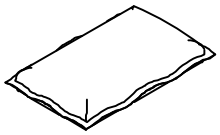	Ottoman Seat Cushion	1
⑰	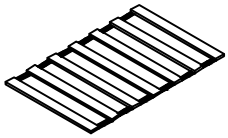	Ottoman Batten	1
⑱	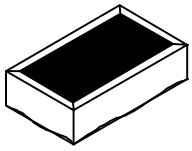	Ottoman Slipcover	1
⑲	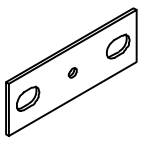	Iron reinforcement plate	2
⑳	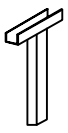	metal feet	1

Sofa Overall Assembly Drawing

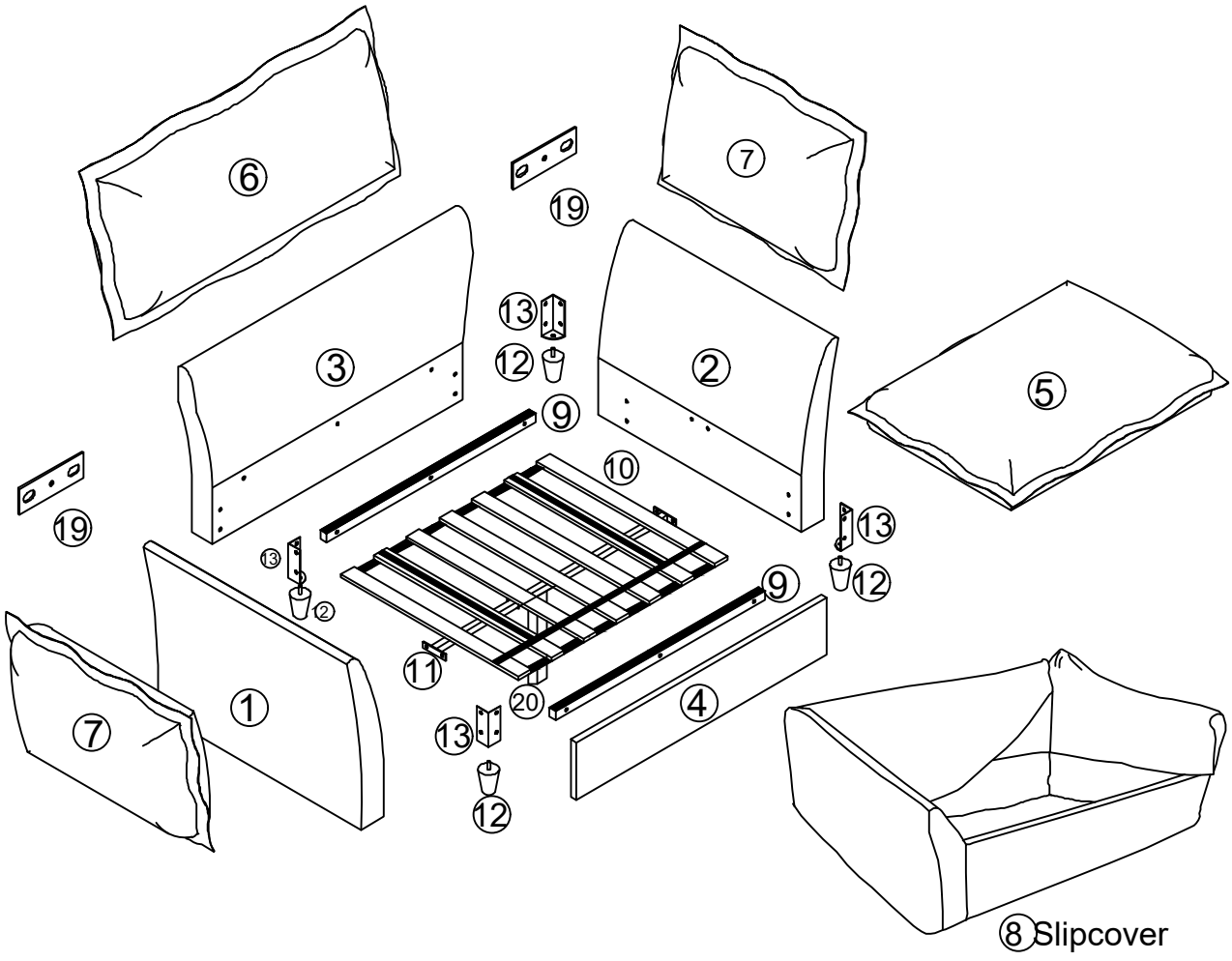

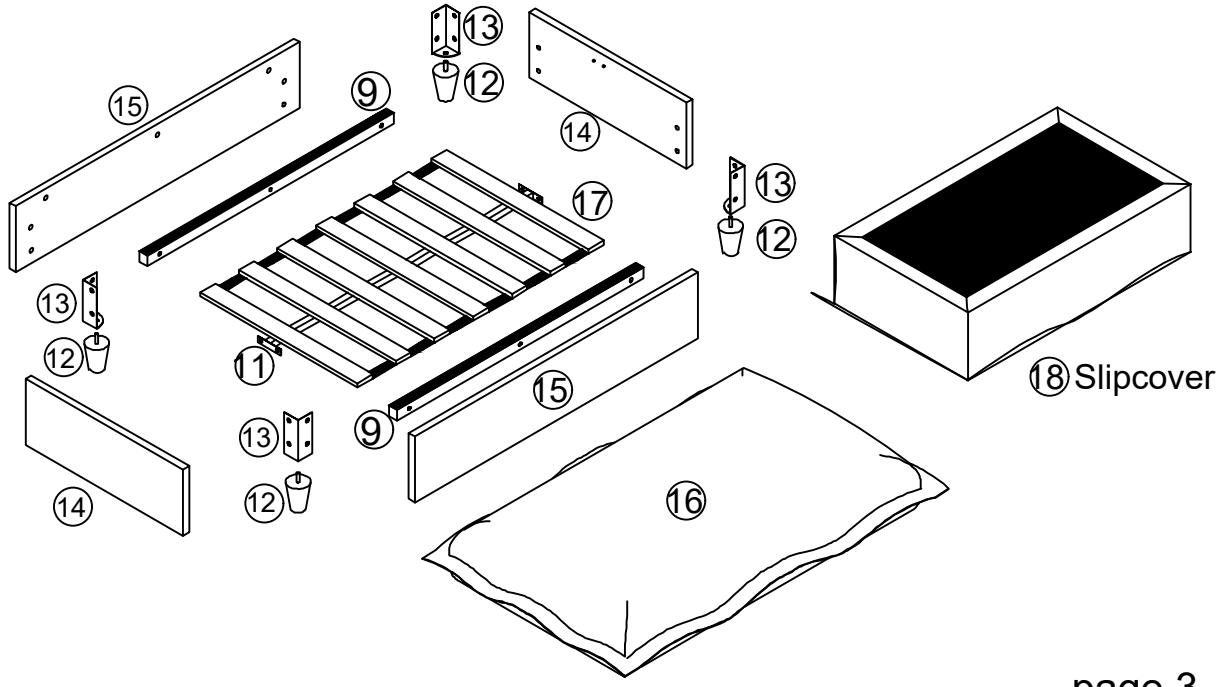

Hardware List

Ax12+1 PCS 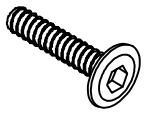 5/16X35mm	Bx12+1 PCS 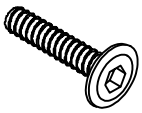 5/16X25mm	Cx20+2 PCS 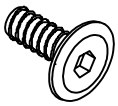 5/16X15mm
Dx8 Flange Nut 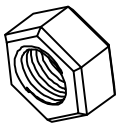 5/16	Gx1 PC 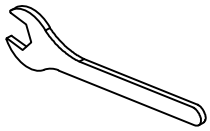 5/16	Fx1 PC 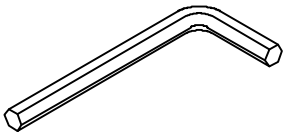 5/16

STEP 1

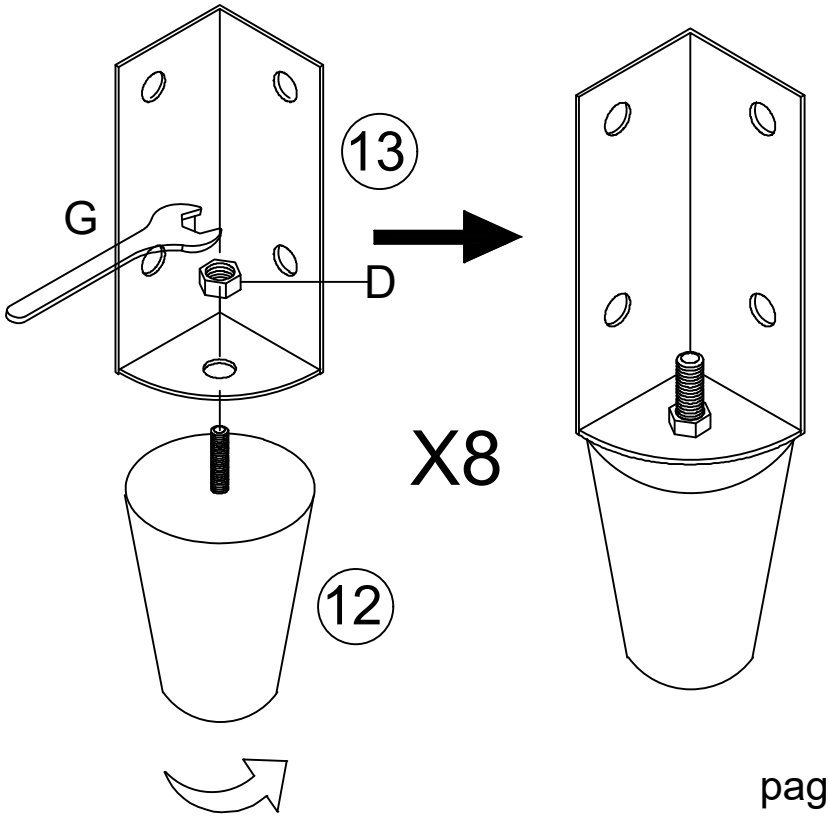

⑫x8 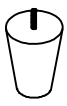	⑬x8 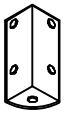
Dx8 Flange Nut  5/16	Gx1 PC  5/16

STEP 2

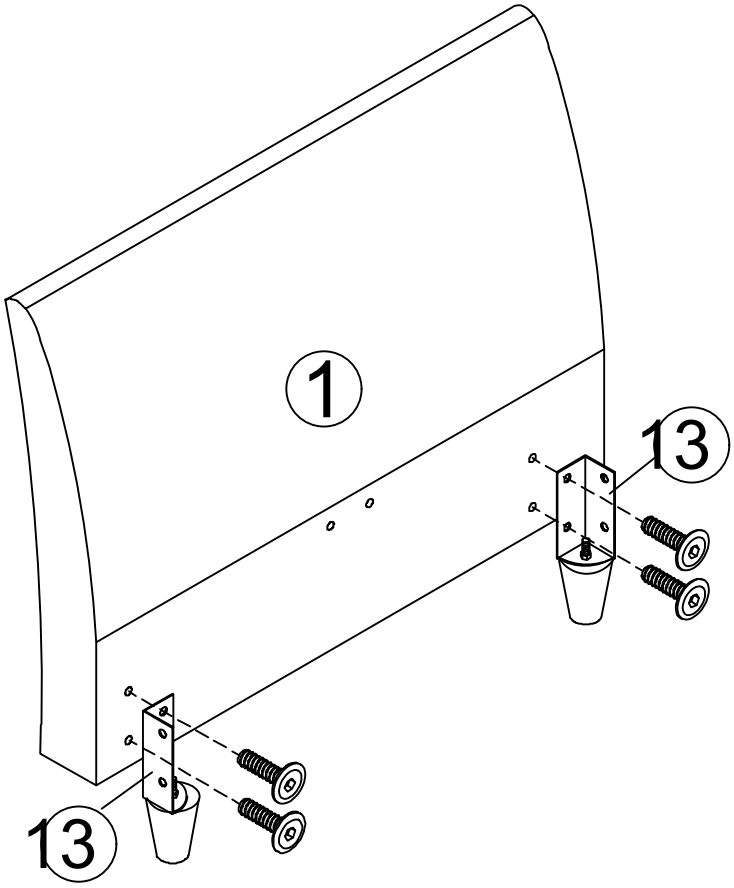

C x 4	F x 1
5/16X15mm	5/16

STEP 3

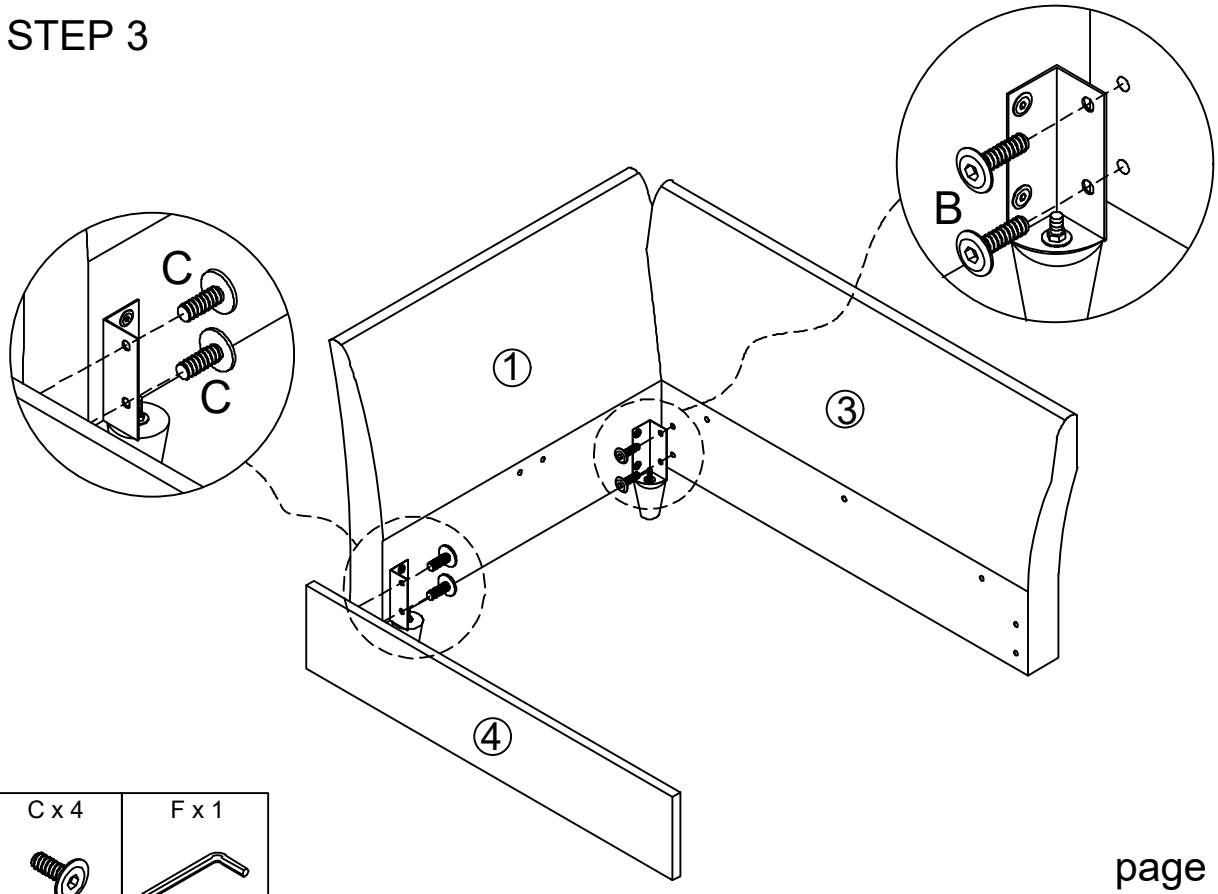

C x 4	F x 1
5/16X15mm	5/16

STEP 4

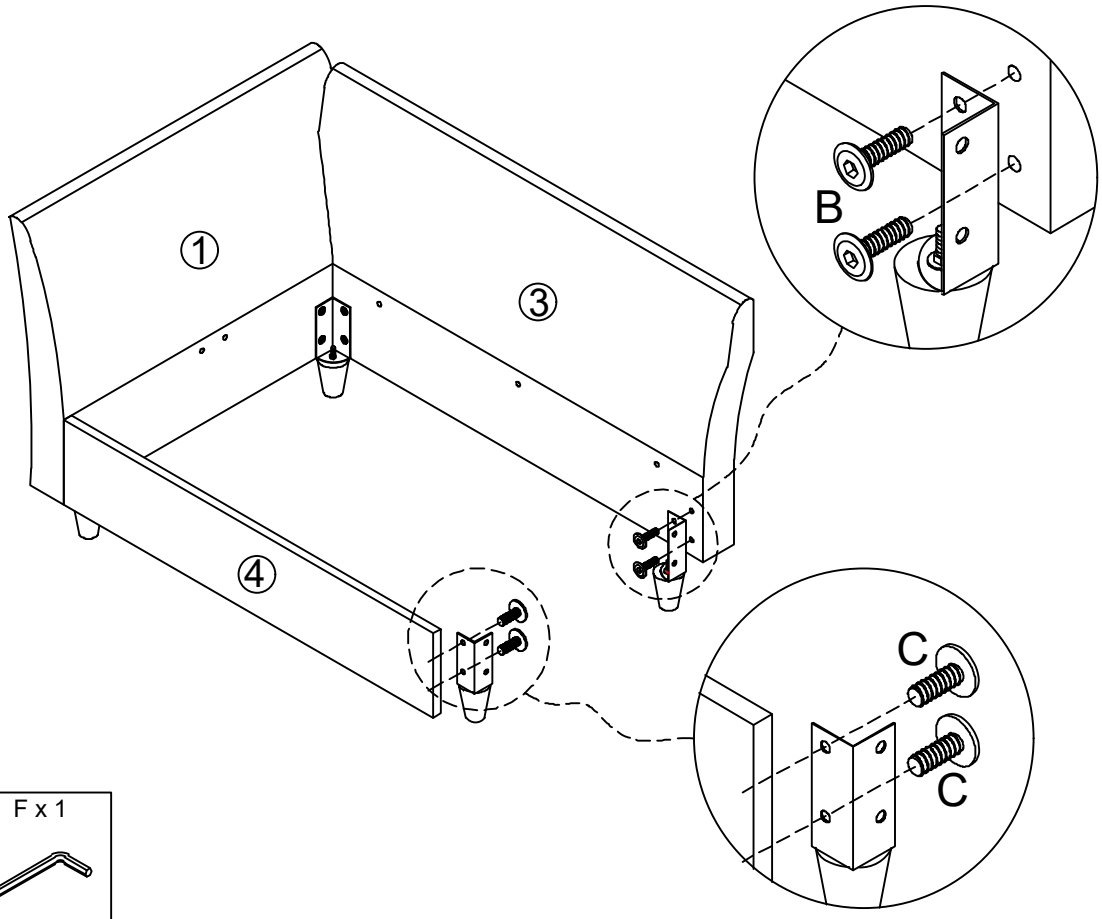

C x 4	F x 1
5/16X15mm	5/16

STEP 5

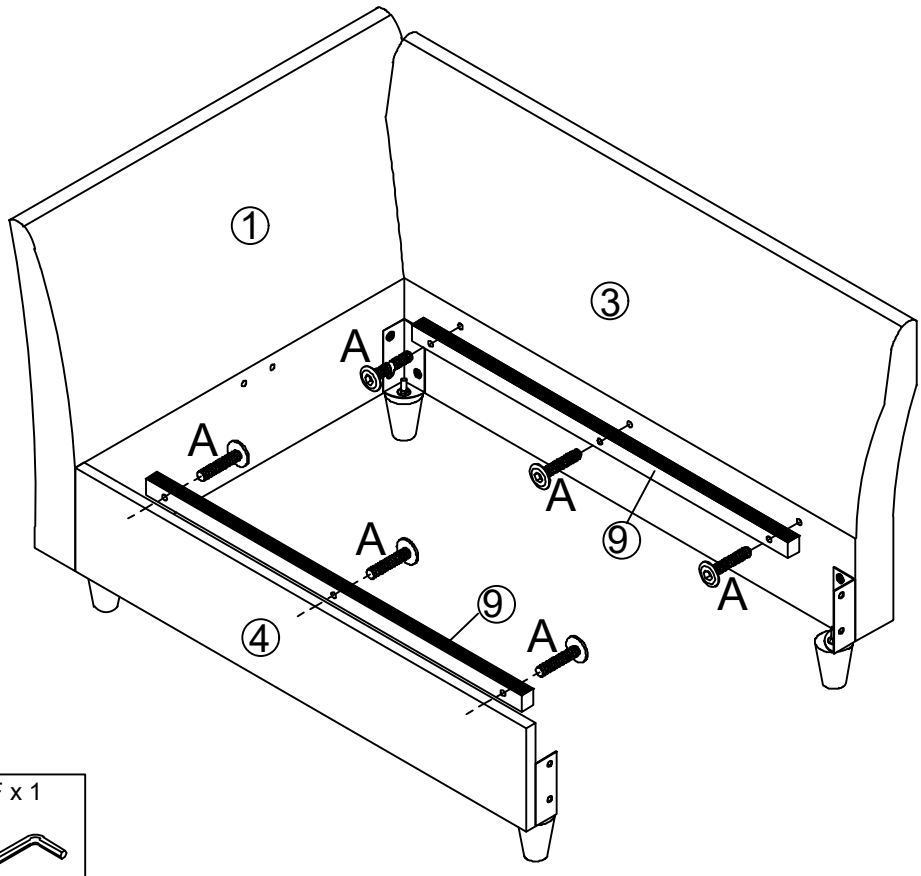

A x 6	F x 1
5/16X35mm	5/16

STEP 6

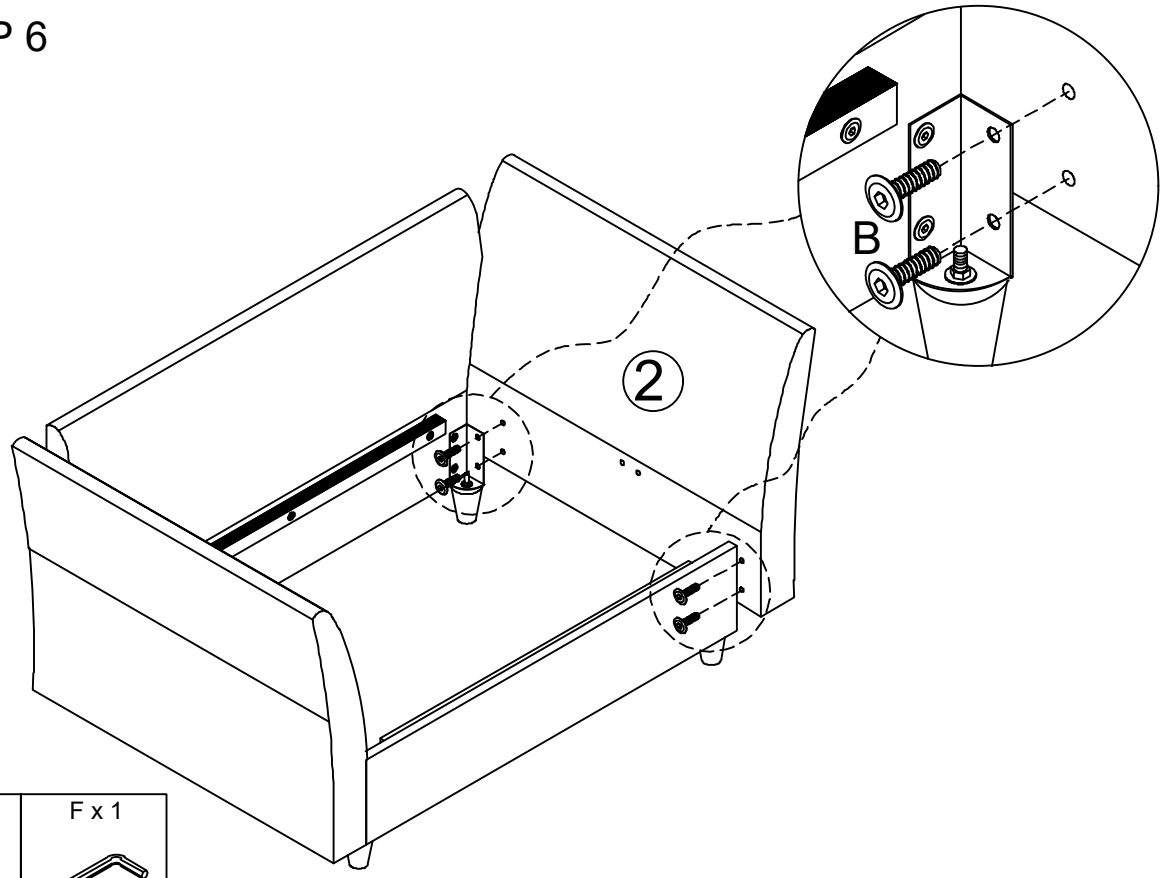

C x 4	F x 1
5/16X15mm	5/16

STEP 7

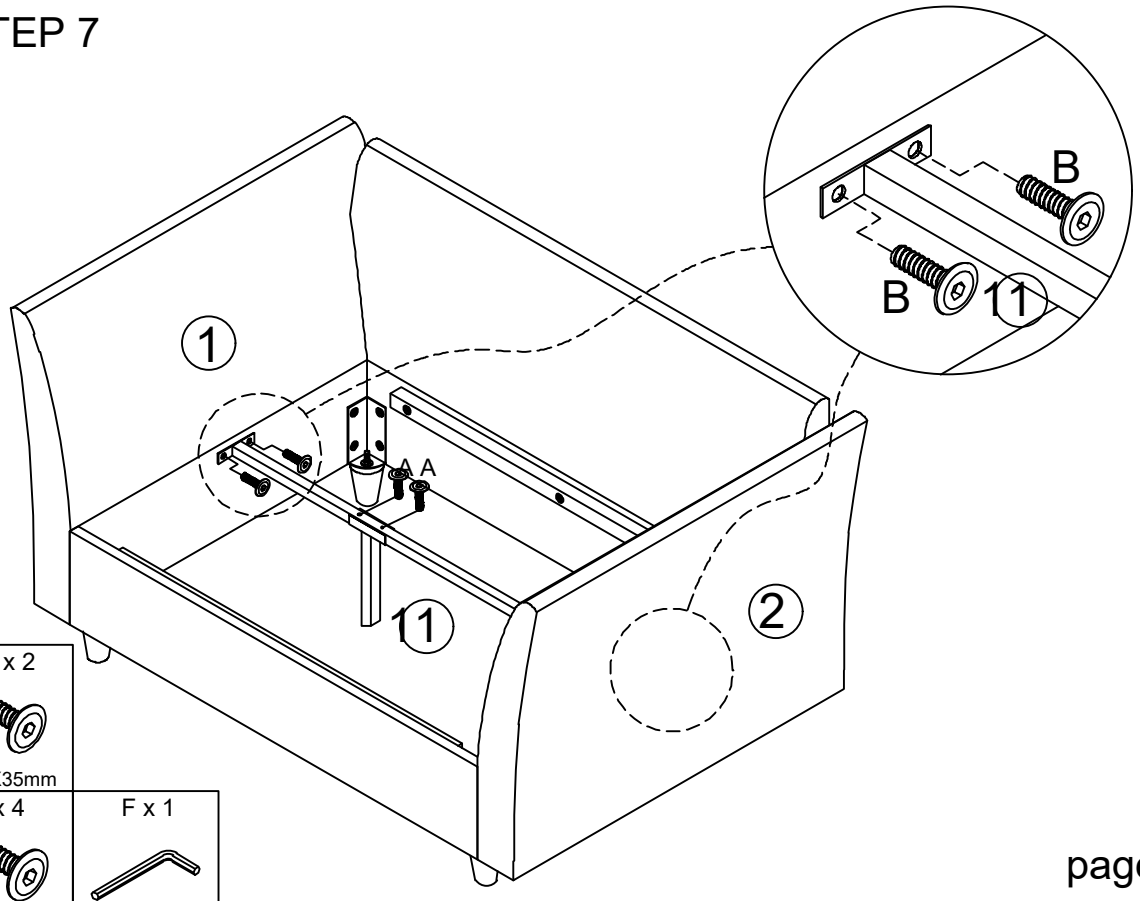

A x 2
5/16X35mm

Bx 4	F x 1
5/16X25mm	5/16

STEP 8

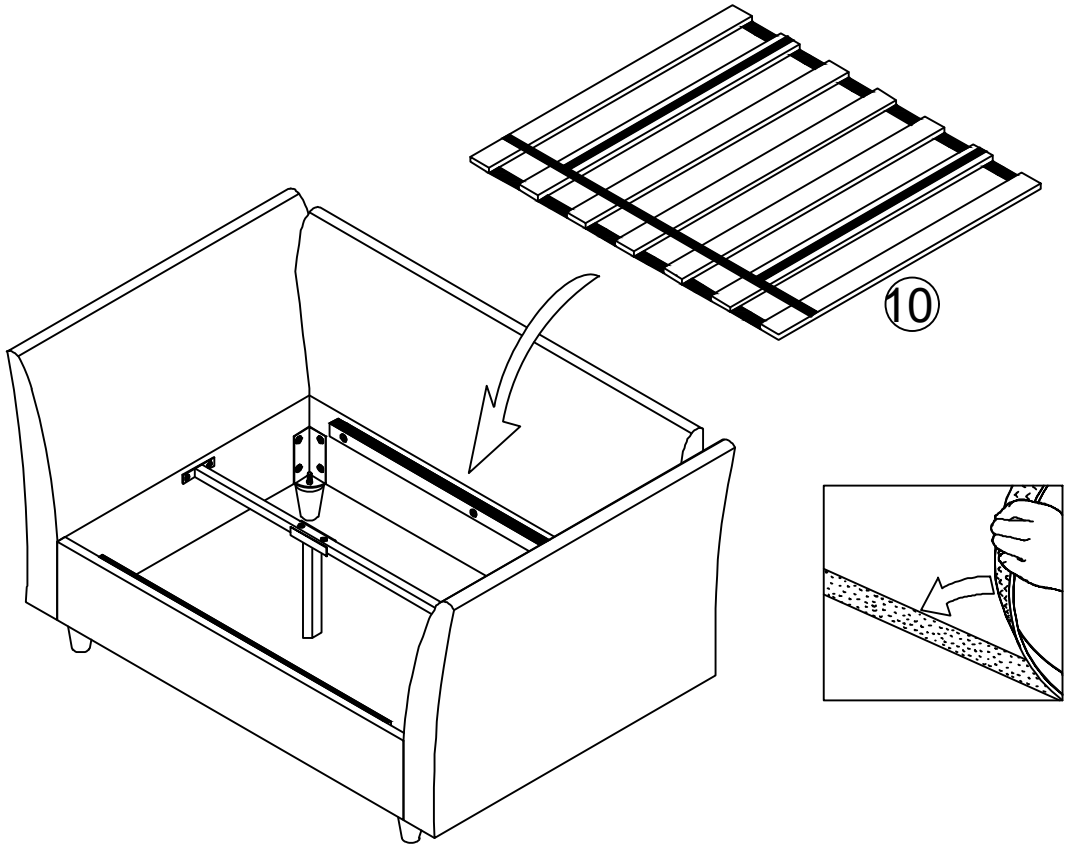

⑩x1

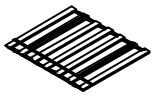

STEP 9

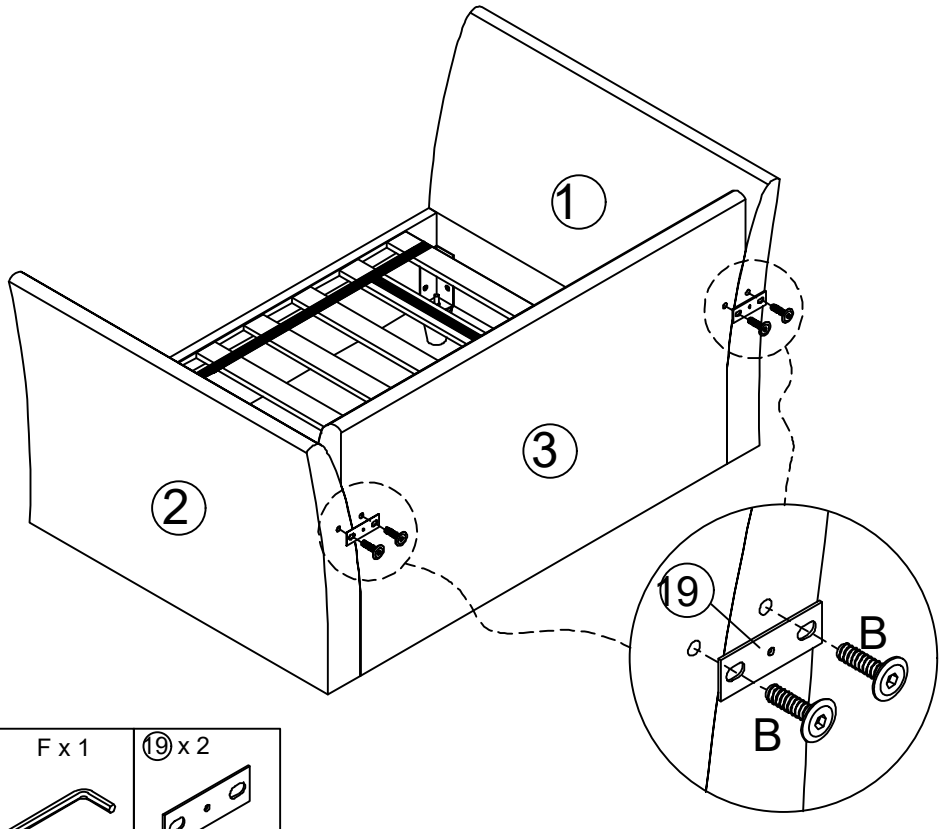

C x 4	F x 1	⑲ x 2
		
5/16X15mm	5/16	

STEP 10 First, unzip the zipper on the Slipcover(8). Then, slip the cover onto the sofa. Once the cover is positioned smoothly and fits snugly on the sofa, secure it firmly using the Velcro strips attached to the cover. Finally, close the zipper at the back of the cover.

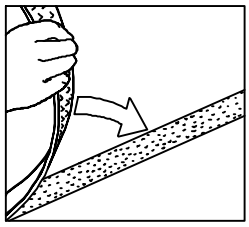

STEP 11

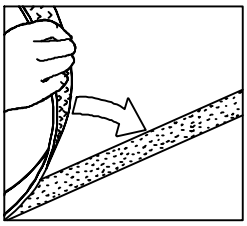

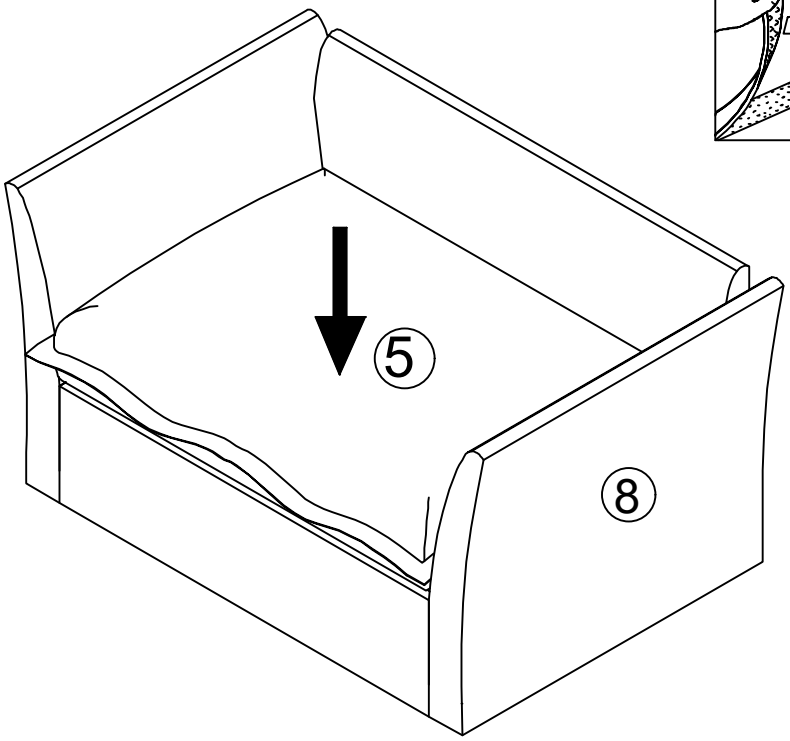

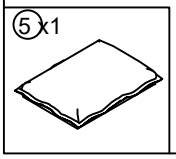

STEP 12

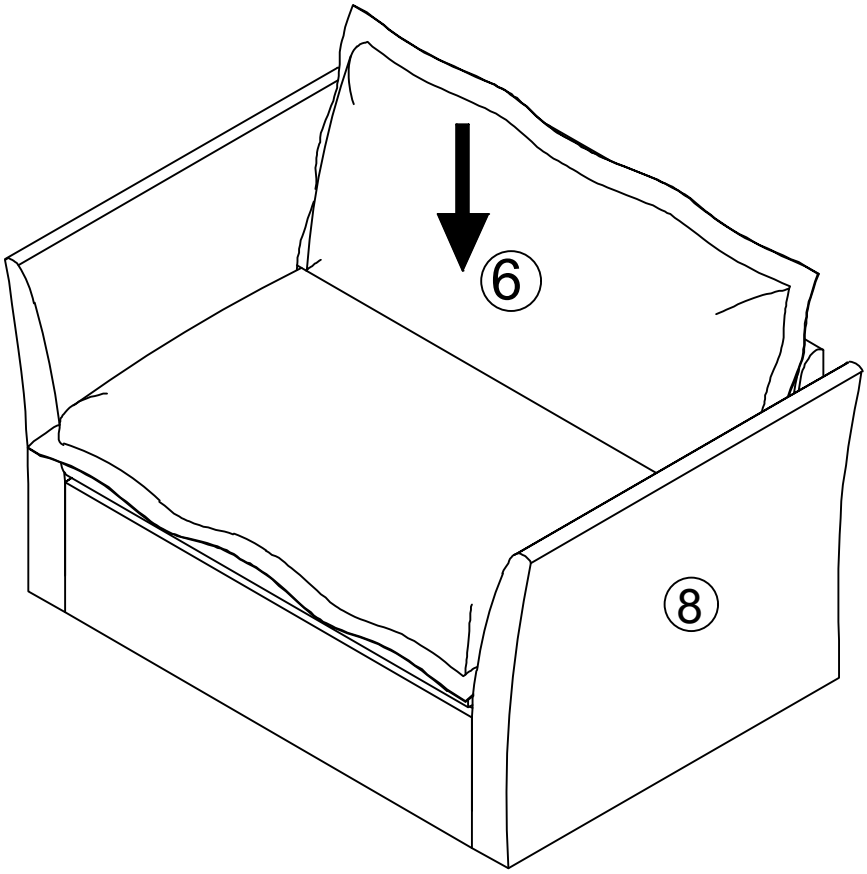

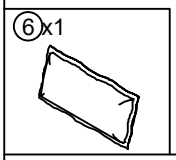

STEP 13

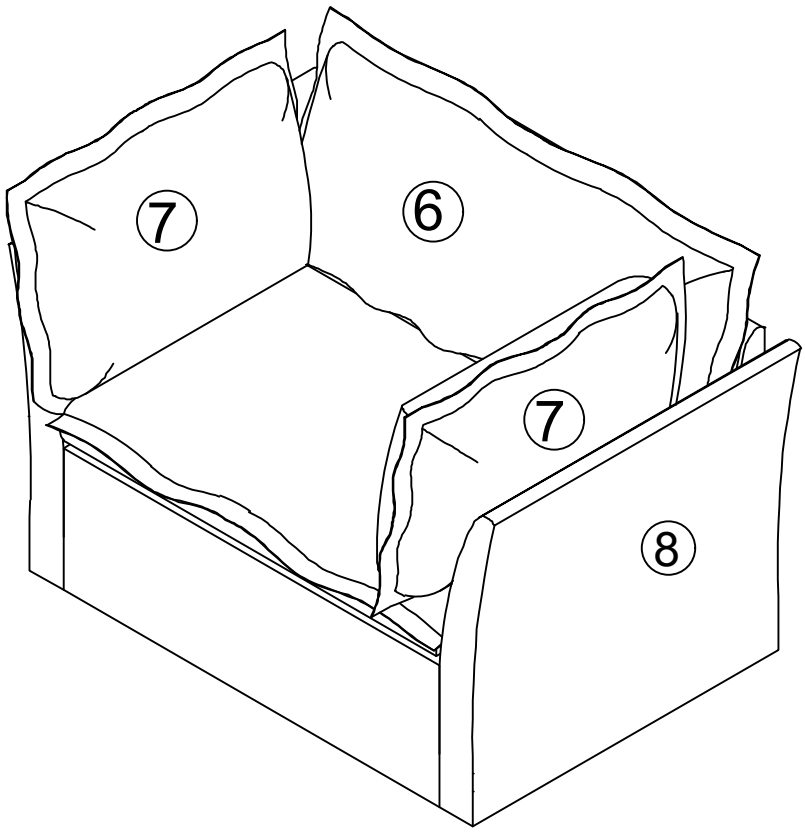

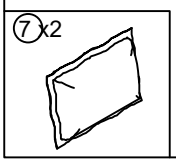

STEP 14

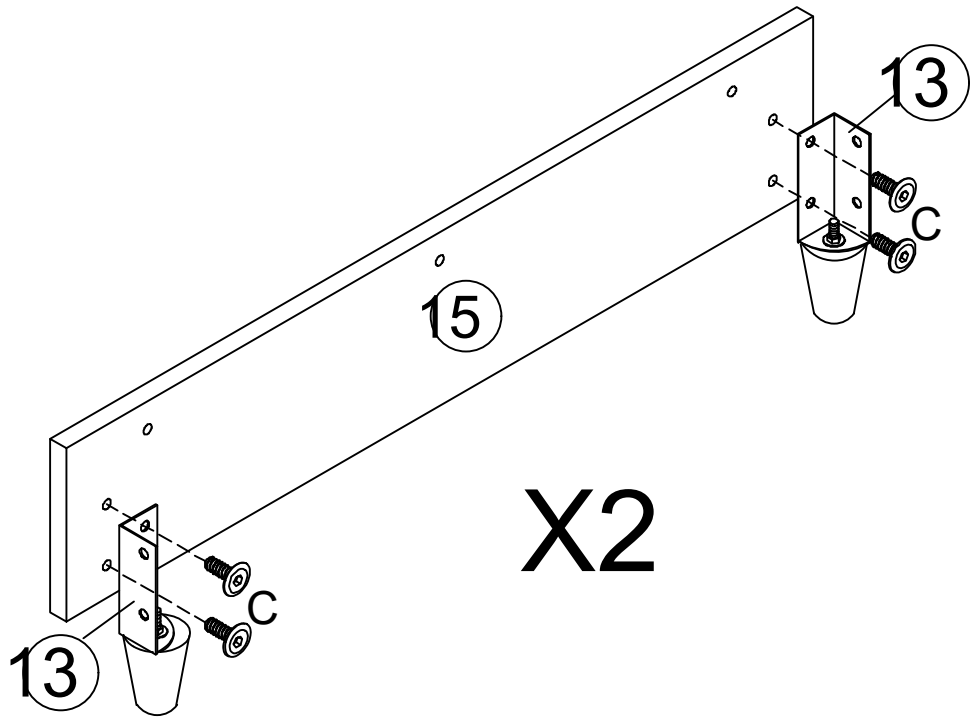

C x 8	F x 1
5/16X15mm	5/16

STEP 15

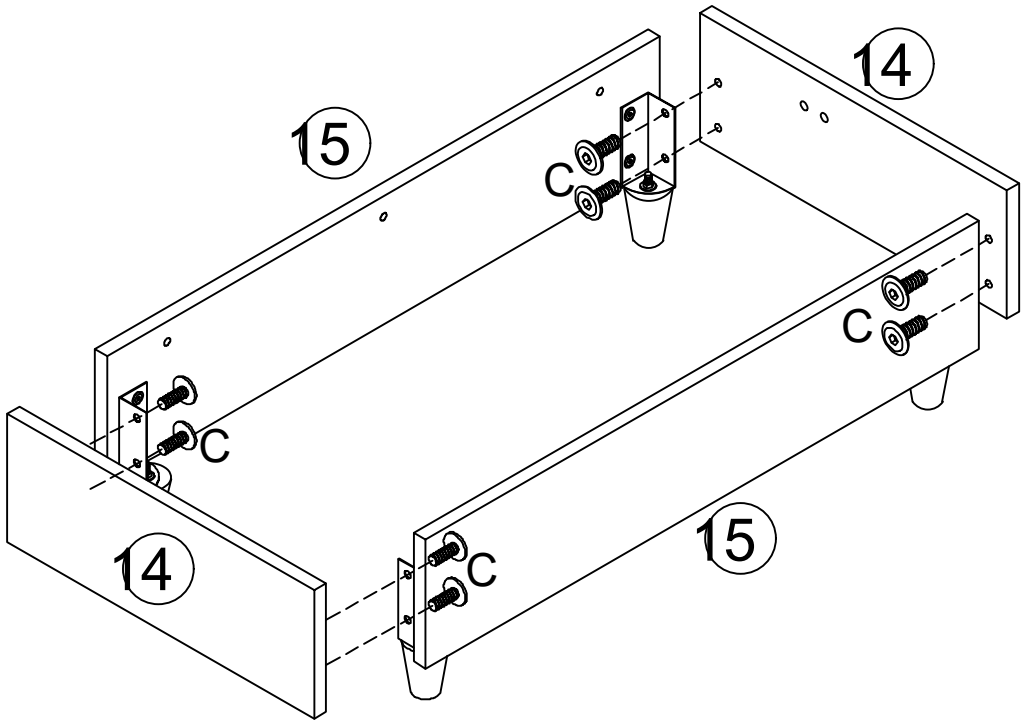

C x 8	F x 1
5/16X15mm	5/16

STEP 16

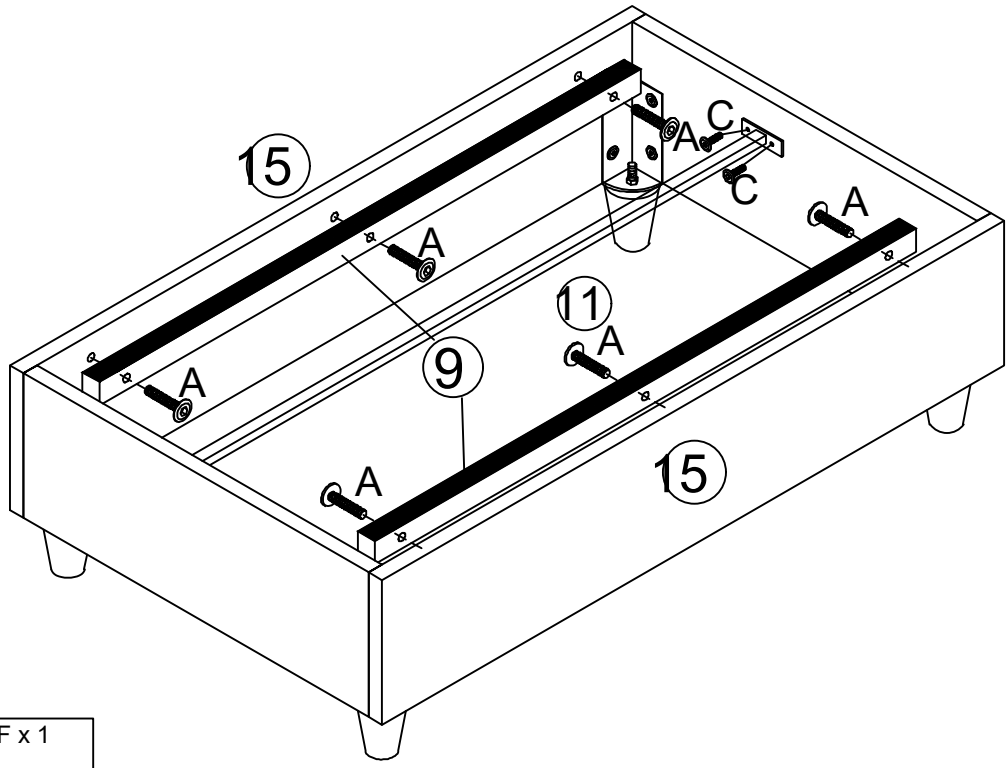

C x 4		A x 6	F x 1
5/16X15mm		5/16X35mm	5/16

STEP 17

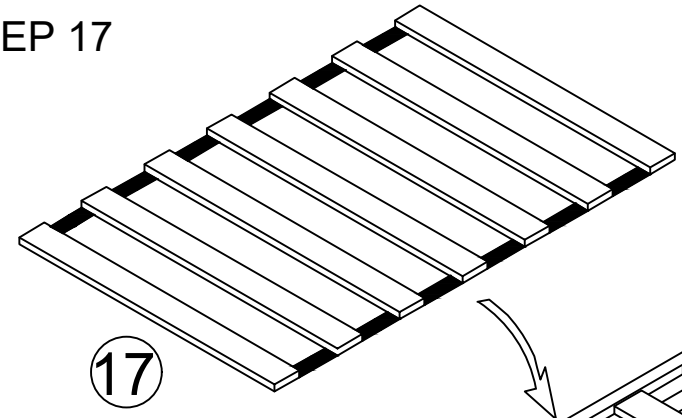

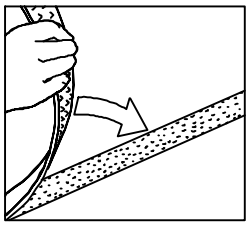

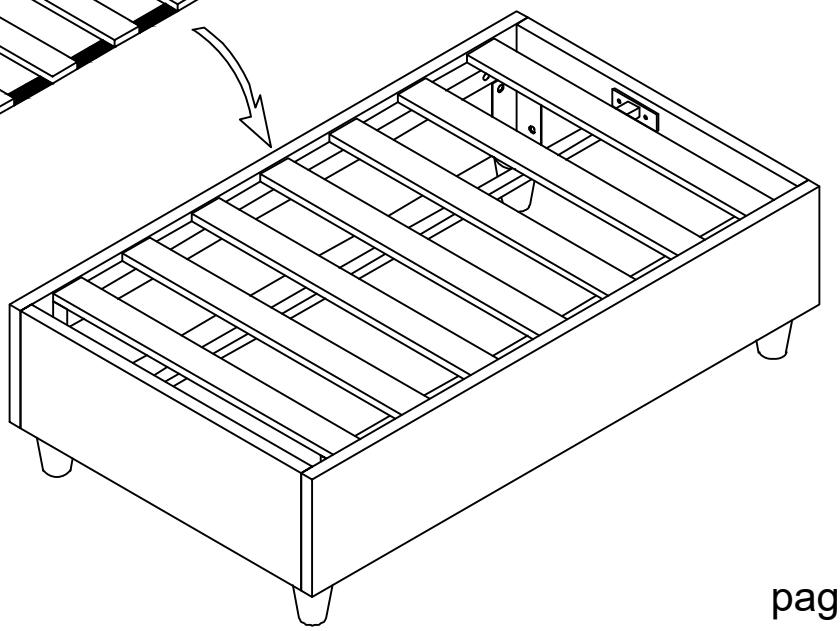

⑰x1

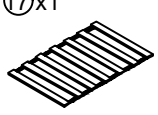

STEP 18

Place the slipcover(18) over the ottoman, ensuring it lies flat and adheres smoothly to the surface.

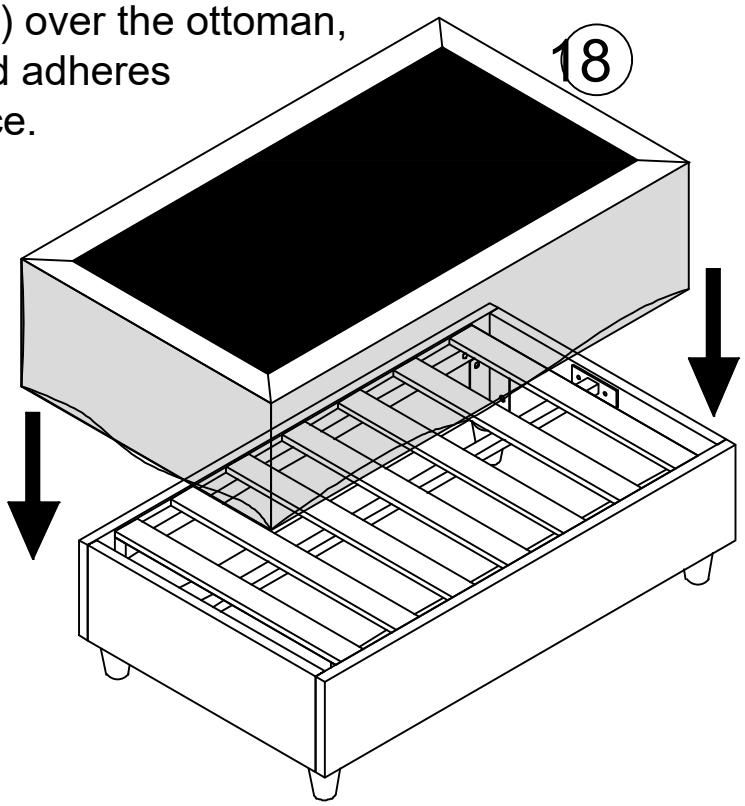

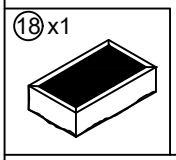

STEP 19

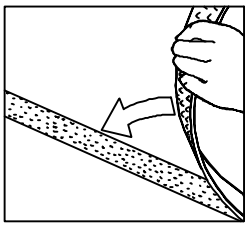

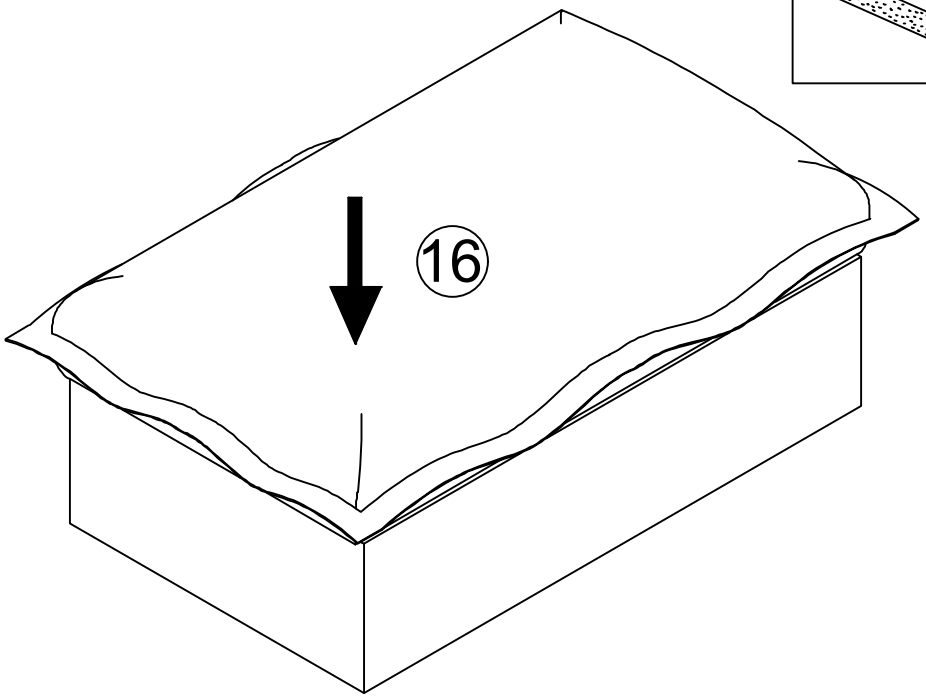

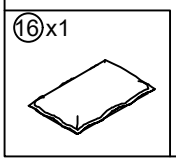

Finish

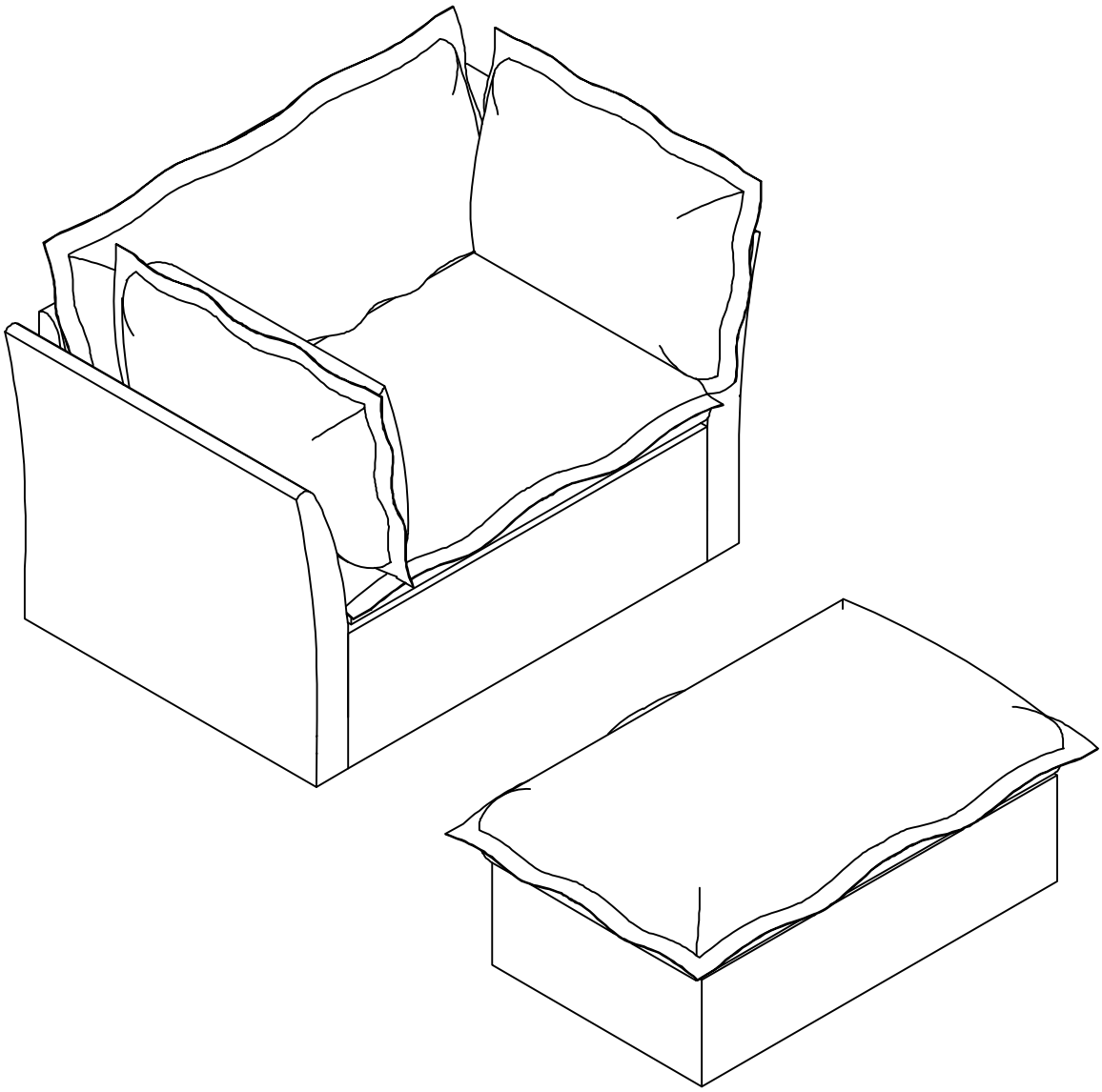

The product has compression parts,
Please pat them by hand and wait 72 hours,
the cushions will be recover.