Warnings and Cautions

Please retain this instruction for future usage and read carefully before assembly.

Make sure you have all the parts & hardware as item list shows.

***3 adults or more** are recommended to install your Sunroom.*

Do not discard any of the packaging until you have checked that you have all the parts and pack of fittings.

Check all bolts for tightness before use, and periodically check and tighten bolts ensure your gazebo works properly.

Some parts might have sharp edger/corners/Please follow basic safety precautions to reduce the risk of hurts.

Avoid installing and settling the solarium in a corridor of heavy wind.

Some assembly parts contain sharp edges, you should wear protective gloves when handling these items.

For safety issues you must not leave the unit unattended if it is not completed, even if it is already anchored to the ground.

*It is essential to place the gazebo on level ground and not less than **6 feet** from any obstruction such as fences, garages, overhanging branches, laundry lines, or electrical wires.*

If you have questions or concerns.

*Please contact us via email at **service@domioutdoorliving.com***

Domi outdoot living

domi
outdoor living

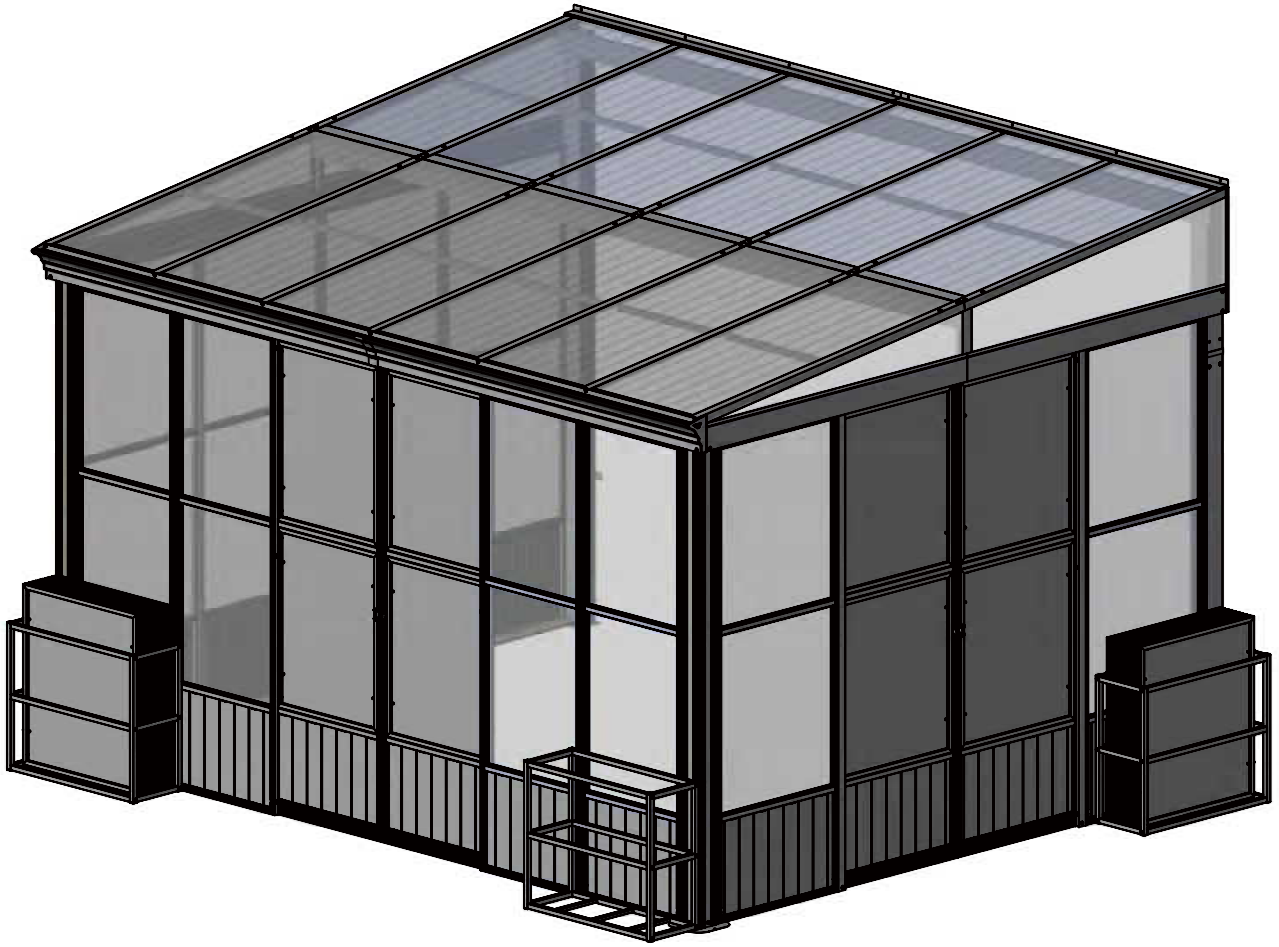

10'x12'

SKU: LGFP1647A

Solarium Wall-Mounted Sunroom

Assembly Manual

© Copyright 2023-2025 Domi Outdoor Living LLC.All Rights Reserved.

LGFP1647

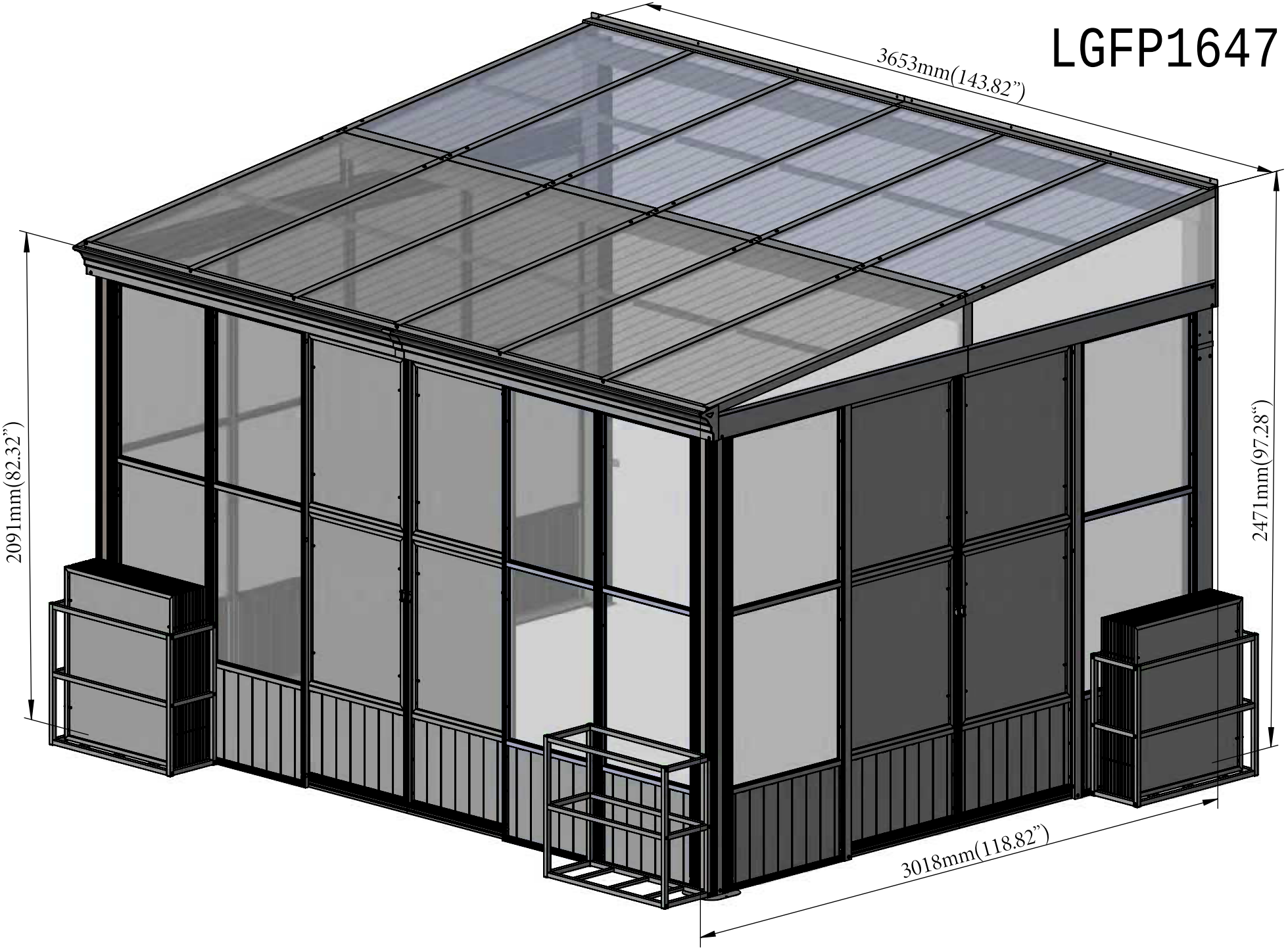

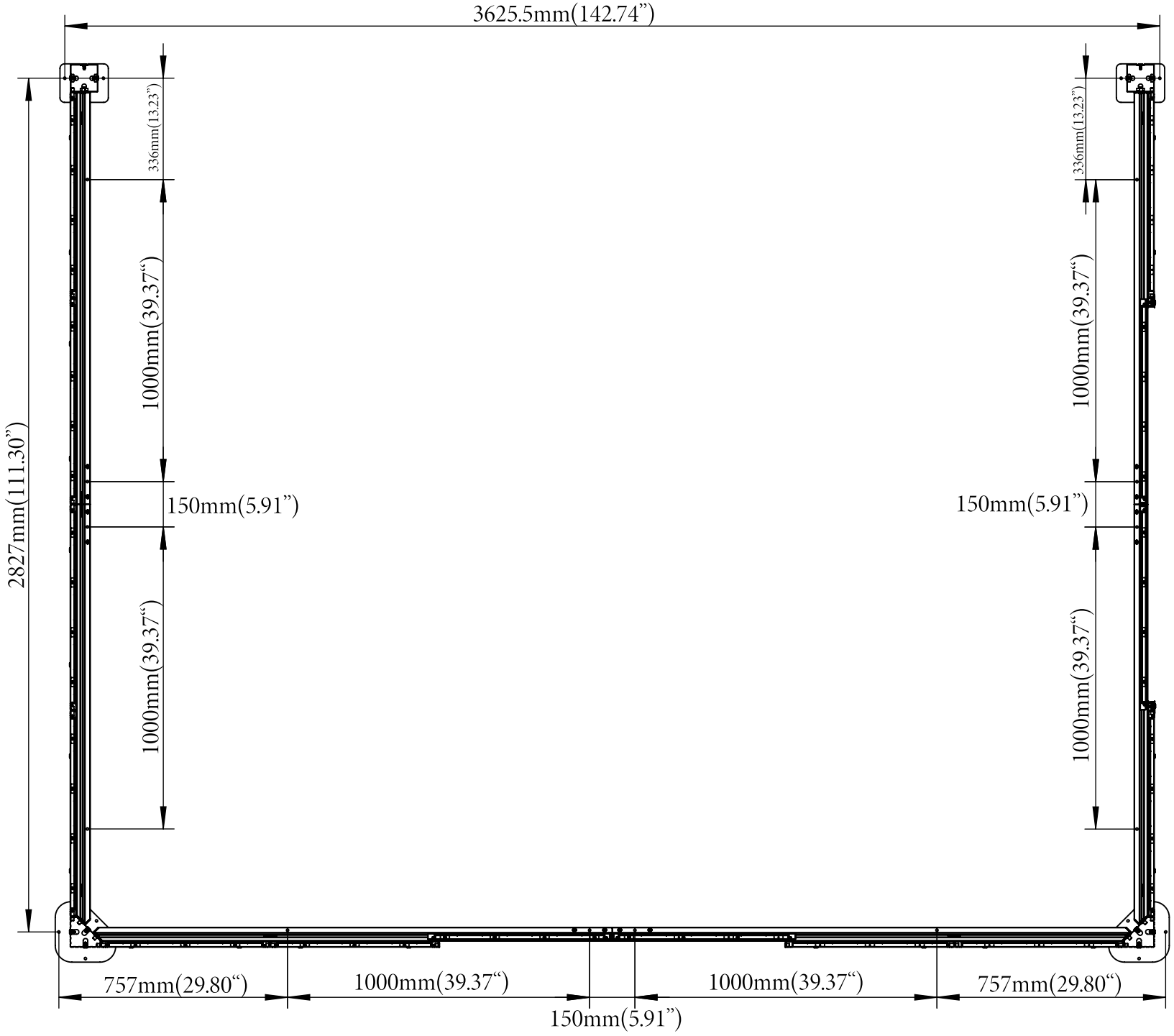
3625.5mm(142.74")
336mm(13.23")
336mm(13.23")
2827mm(111.30")
1000mm(39.37")
1000mm(39.37")
150mm(5.91")
150mm(5.91")
1000mm(39.37")
1000mm(39.37")
757mm(29.80")
1000mm(39.37")
1000mm(39.37")
757mm(29.80")
150mm(5.91")

Thank you for your purchase of

Domi outdoor living's Sunroom

Read and follow this assembly and operation guide.

To reduce personal injury and damage to you Sunroom

We recommend a **three-person team** for assembly and disassembly.

Please **remove** snow accumulation at all times.

Please schedule enough time to complete the assembly of the sunroom.

It will takes approximately 7 hours to set up.

If you like our products, please tell other customers

If you have problem with our products, please tell us

Please feel free to contact us.

DOMI OUTDOOR LIVING

domi
outdoor living

Pre-assembly

TOOLS THAT MAY BE REQUIRED (Not included in boxes)

***NOTE: Tools / equipment are not shown to actual size and scale.**



LEVEL

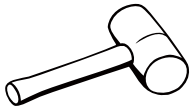

RUBBER MALLET



PHILLIPS SCREW



DRILL



ALLEN KEY

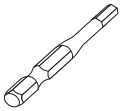

ALLEN KEY

EQUIPMENT REQUIRED (Not included in boxes)

***NOTE: Equipment are not shown to actual size and scale.**



SAFETY HAT



GLOVES



SAFETY GOGGLES



STEPLADDER

Please leave all the bolts a little loose when assembling and then go back to the end of the assembly process to tighten all of the bolts.

Matters needing attention



1. Three or more people are required for assembly.



2. Do not fully tighten screws prior to complete assembly.

Regulation

IMPORTANT: A sunroom may entail to purchase a municipal permit or be subject to specific building codes. It is the consumer's responsibility to inform themselves of any restrictions.

Care and Cleaning:

For cleaning, use a domestic soap or detergent and wash with warm water using a sponge or fabric. Rinse with clean water.

1

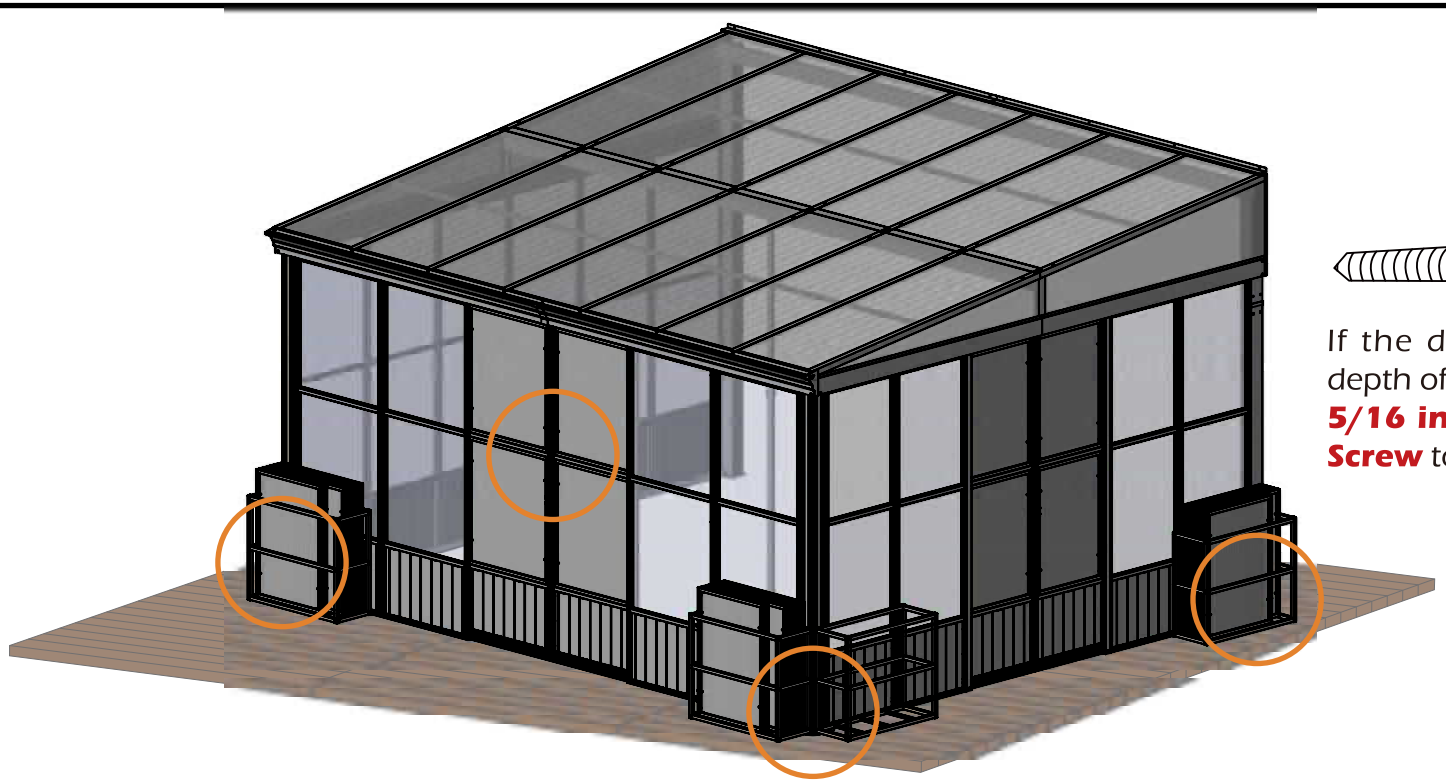

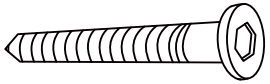

x12

If the deck is hard wood and the depth of it is over 3 inch, you can use **5/16 in. ×4 in. Structural Wood Screw** to mount the pergola.

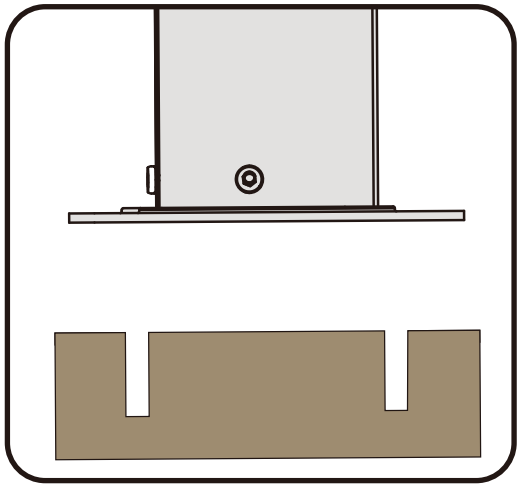

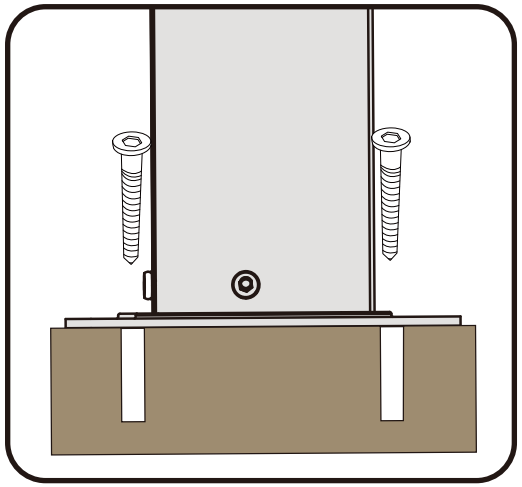

2

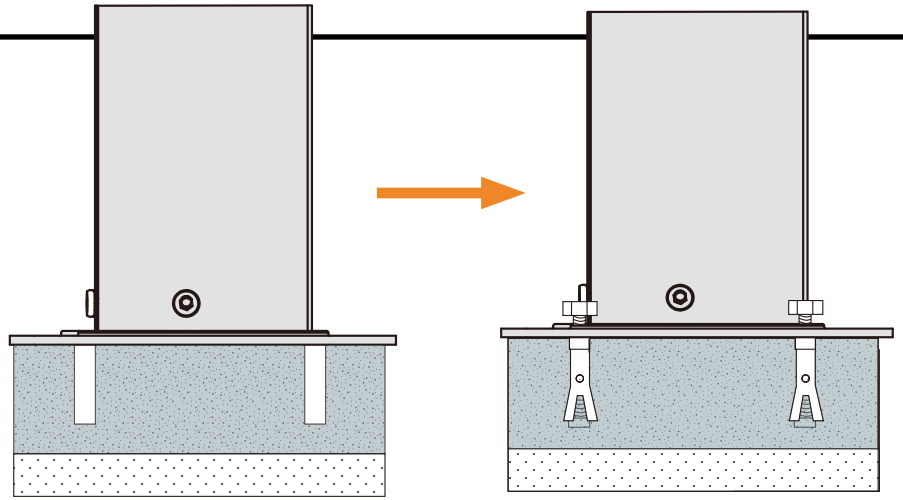

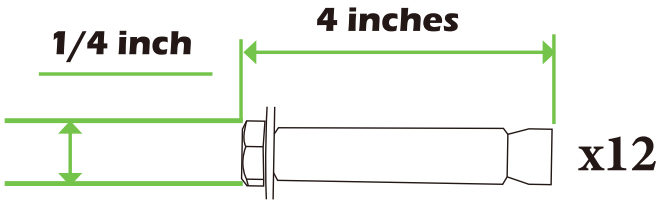

If the ground is concreted and the depth of it is over 3 inch, you can use 1/4 inch expansion bolts to mount the pergola

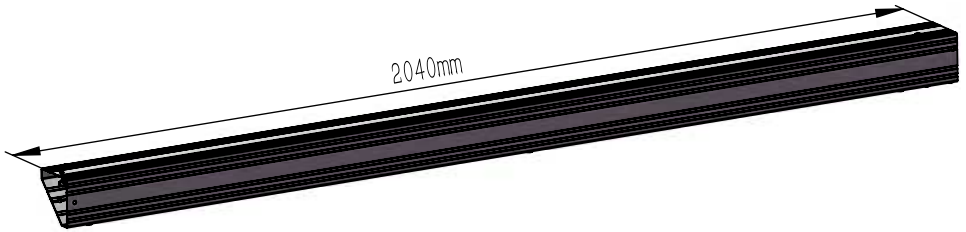

A1 1X

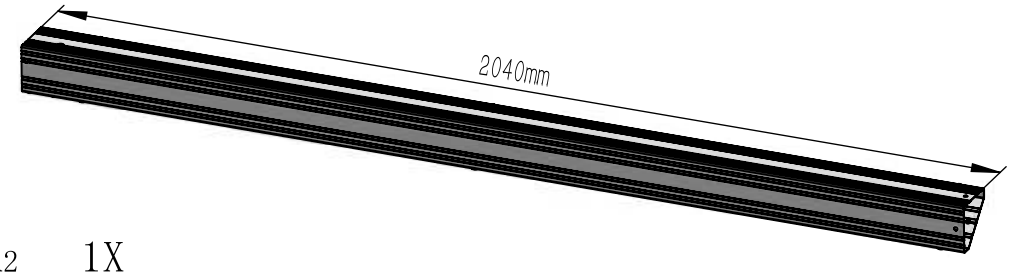

A2 1X

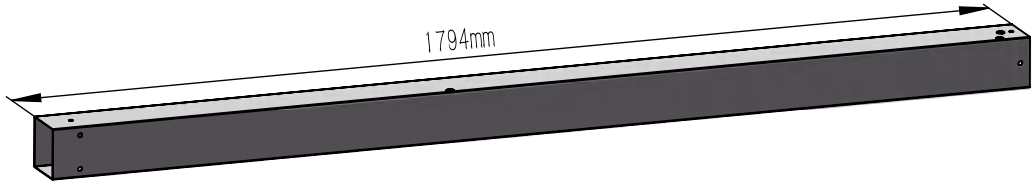

A3 1X

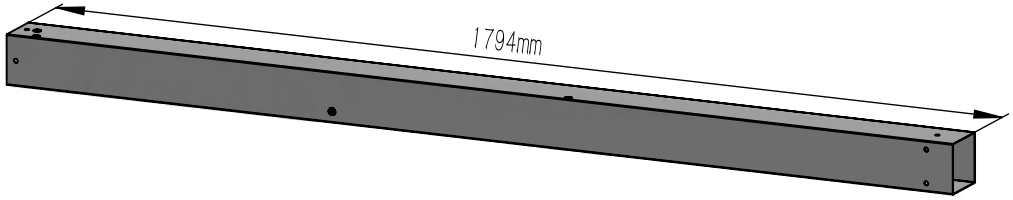

A4 1X

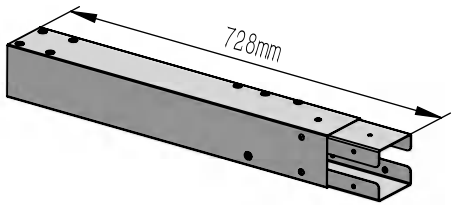

A5 1X

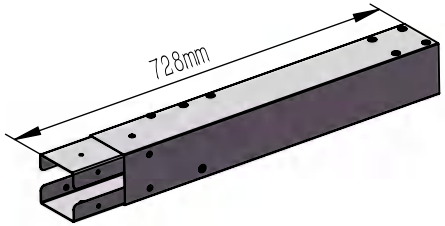

A6 1X

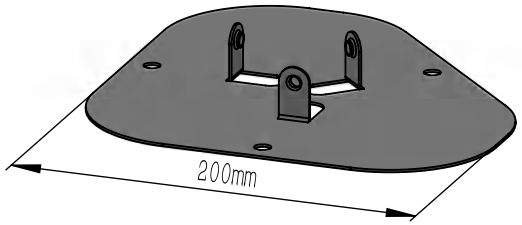

A7 2X

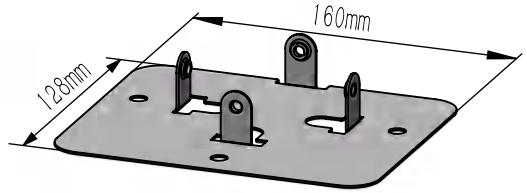

A8 2X

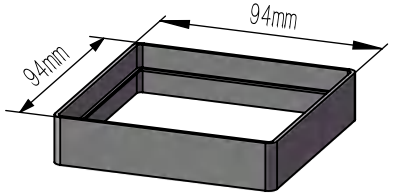

A9 2X

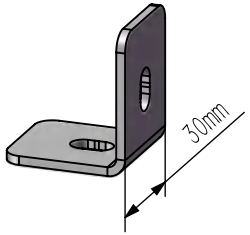

A10 4X

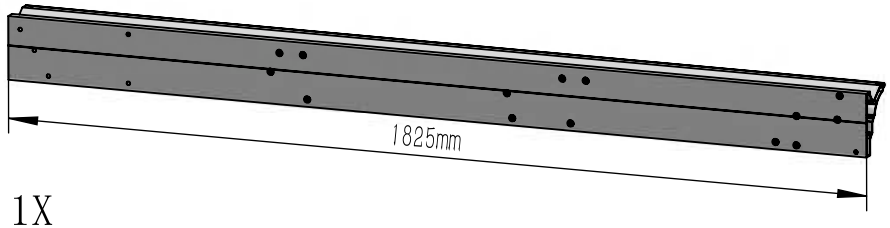

B1 1X

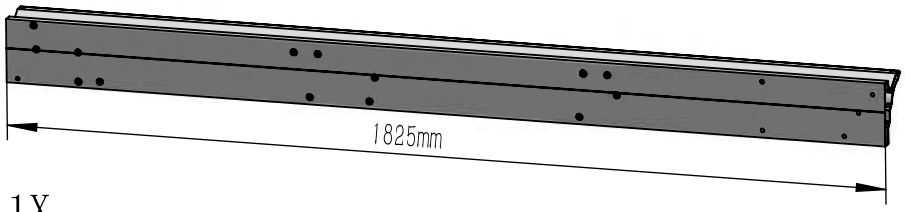

B2 1X

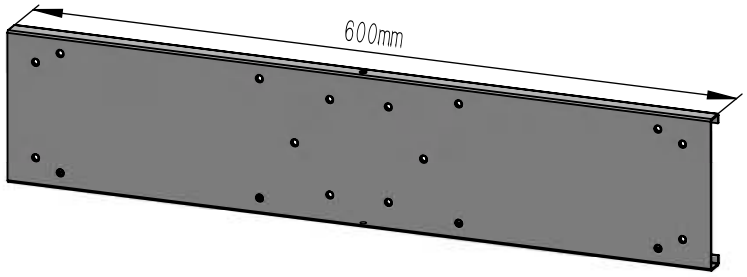

B3 1X

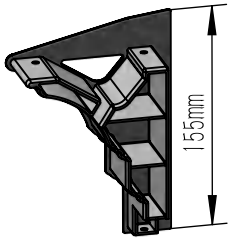

B4 1X

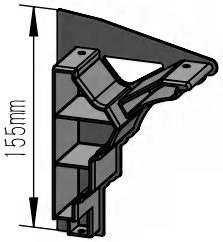

B5 1X

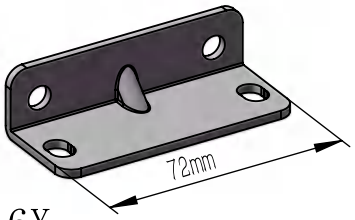

B6 6X

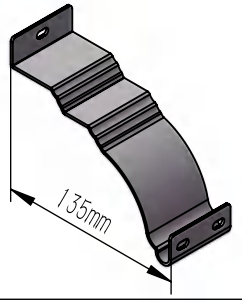

B7 1X

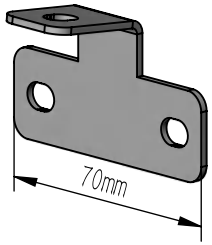

B8 13X

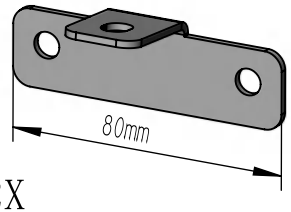

B9 2X

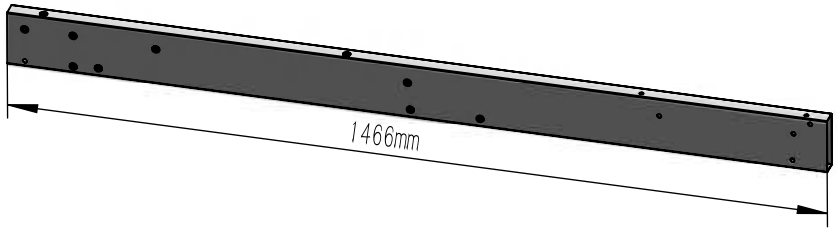

C1 1X

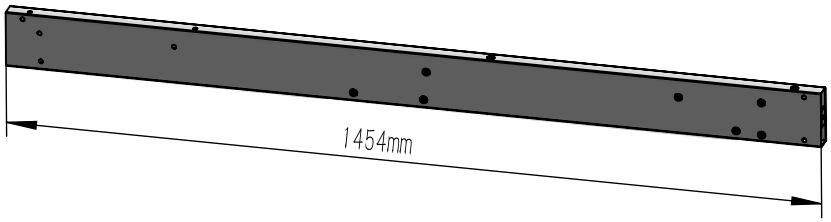

C2 1X

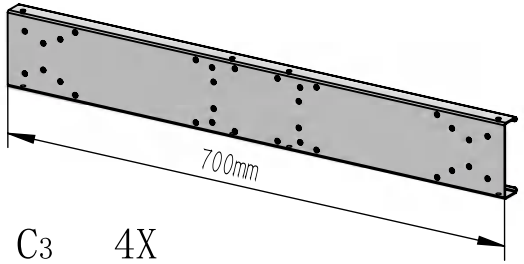

C3 4X

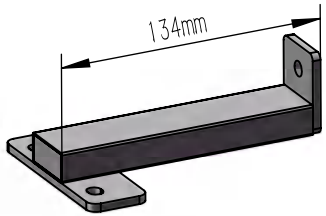

C4 2X



C5 1X



C6 1X

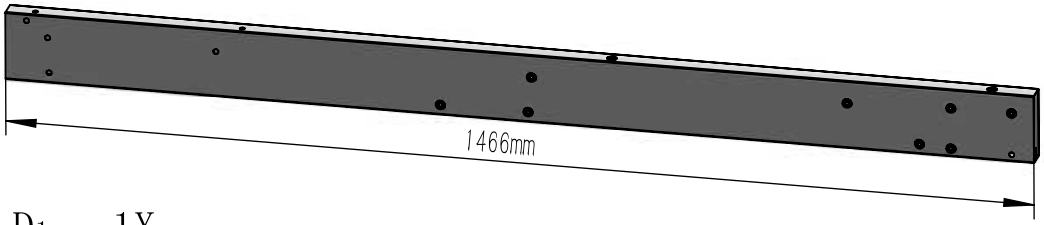

D1 1X

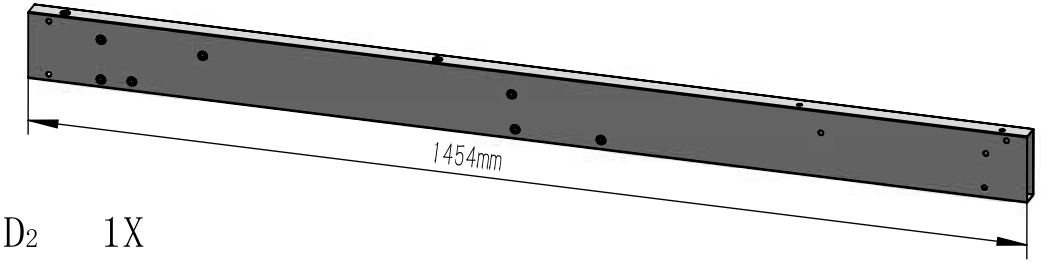

D2 1X



D_3 1X

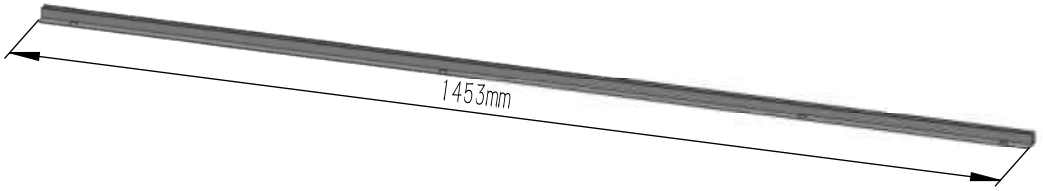

D_4 1X

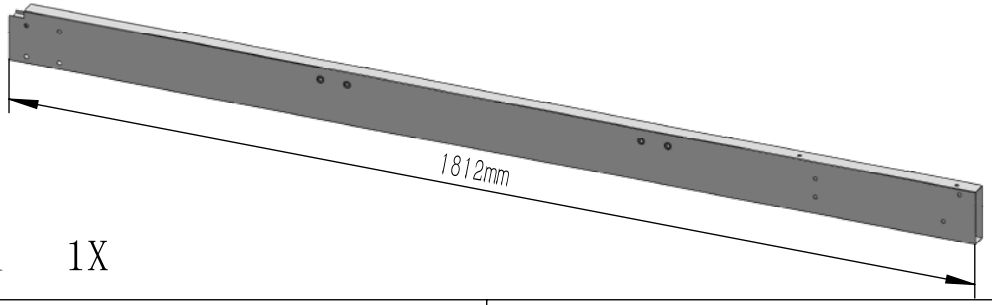

E_1 1X

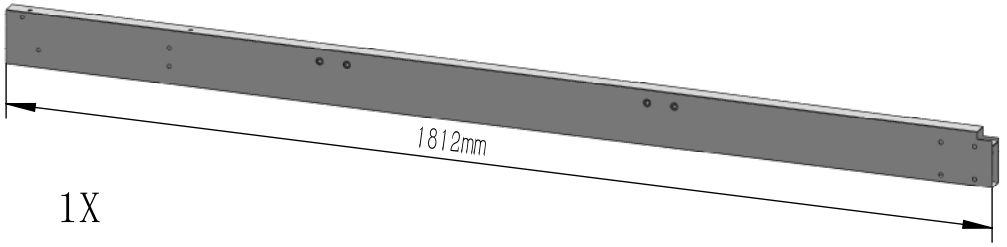

E_2 1X

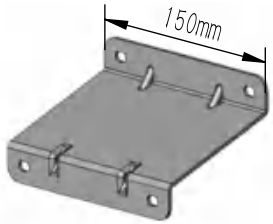

E_3 1X



E_4 2X

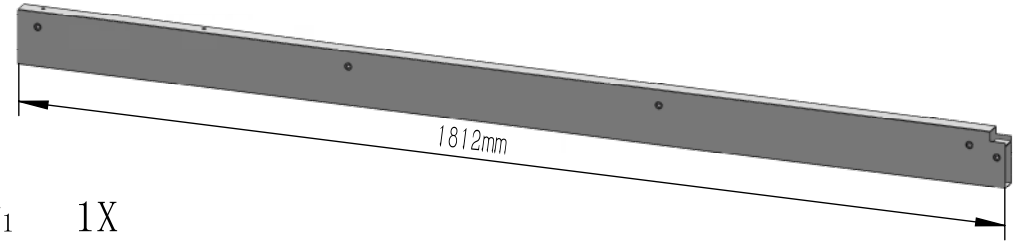

F_1 1X

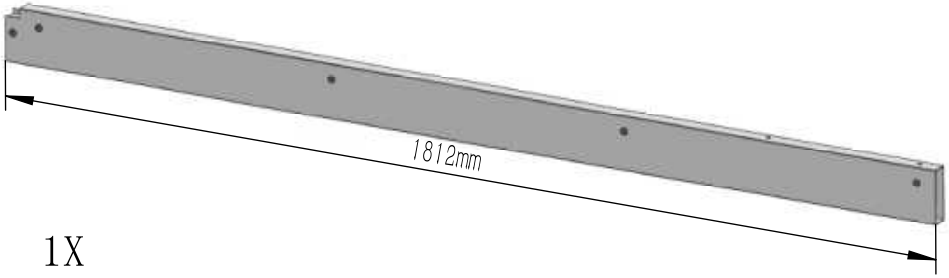

F_2 1X

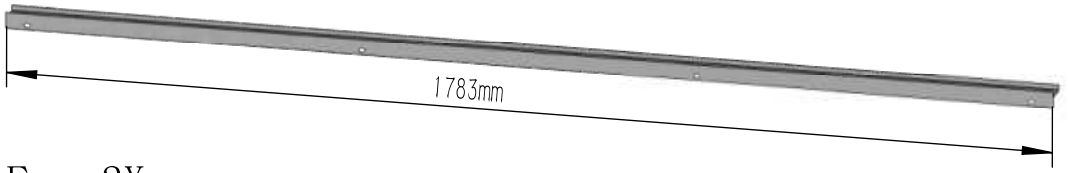

F_3 2X

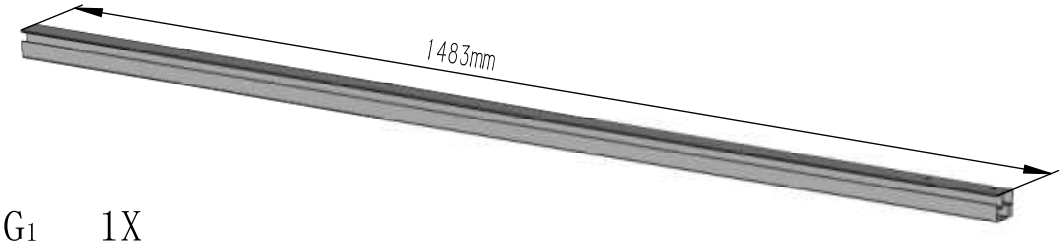

G_1 1X

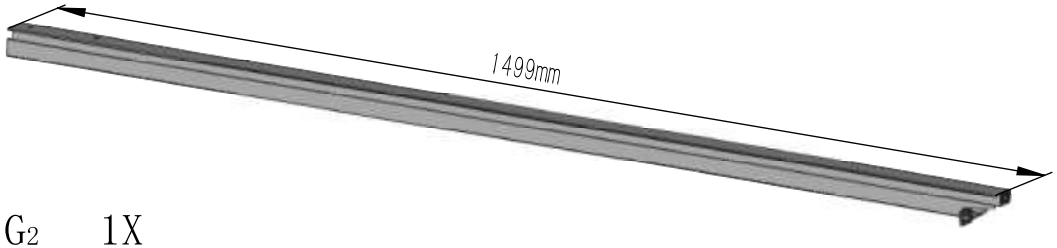

G_2 1X

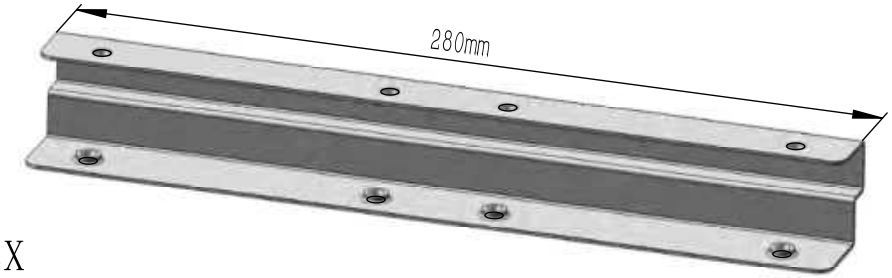

G_3 2X

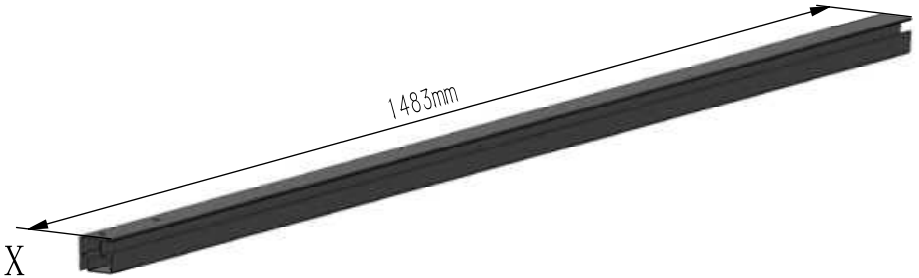

G_4 1X



G_5 1X

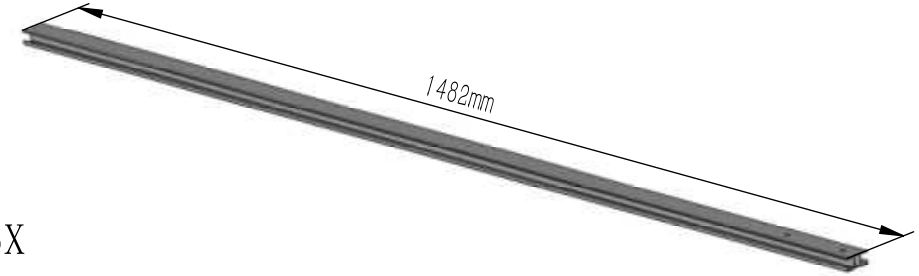

G_6 5X

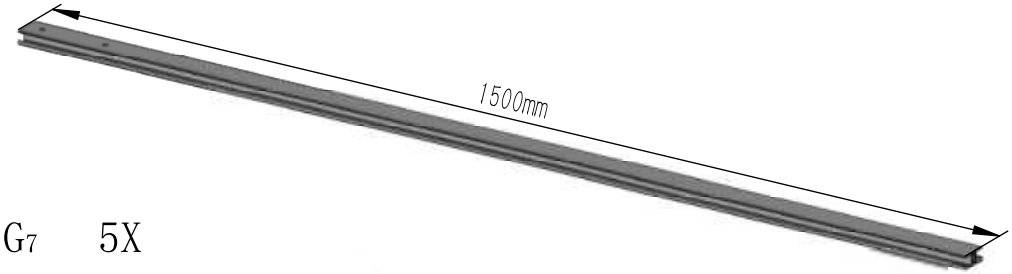

G_7 5X

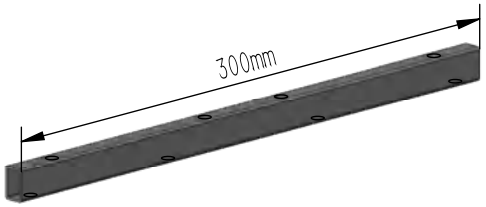

G_8 5X

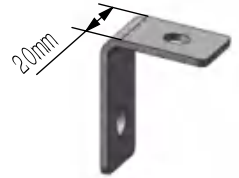

G_9 4X

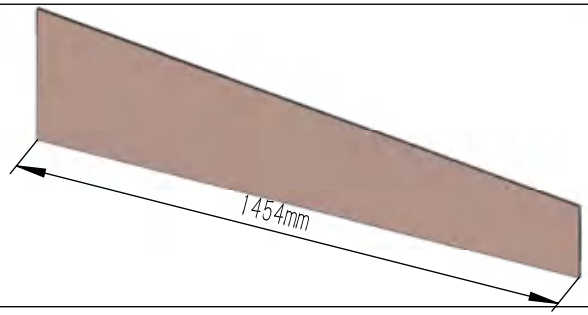

H_1 1X

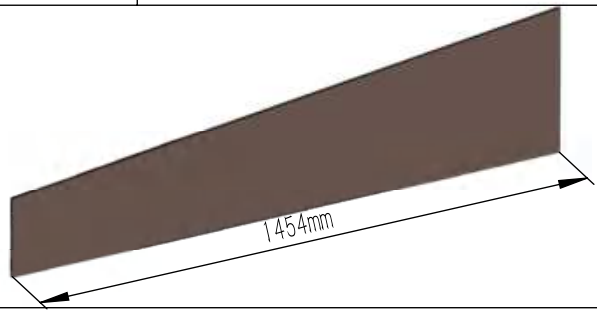

H_2 1X

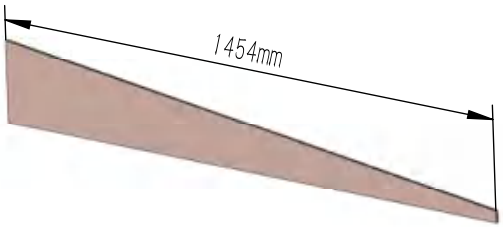

H_3 1X

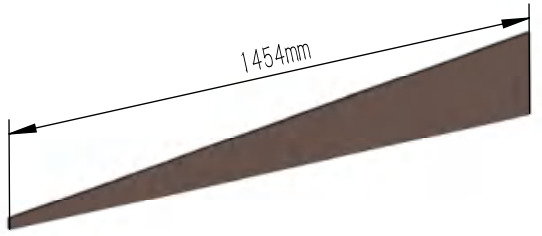

H_4 1X

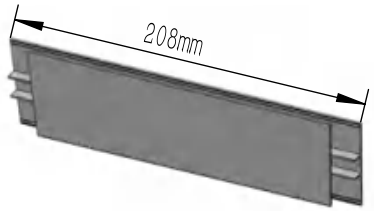

H_5 1X

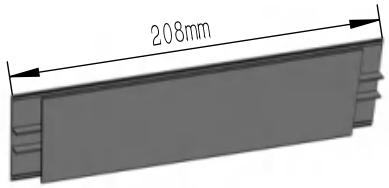

H_6 1X

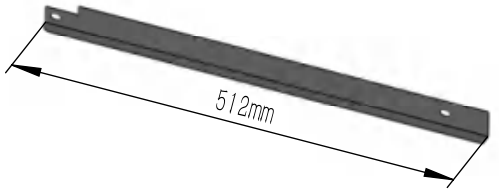

H_7 1X

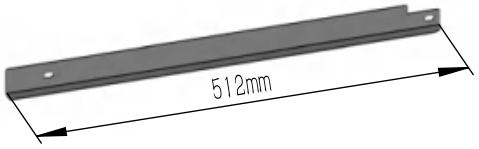

H_8 1X

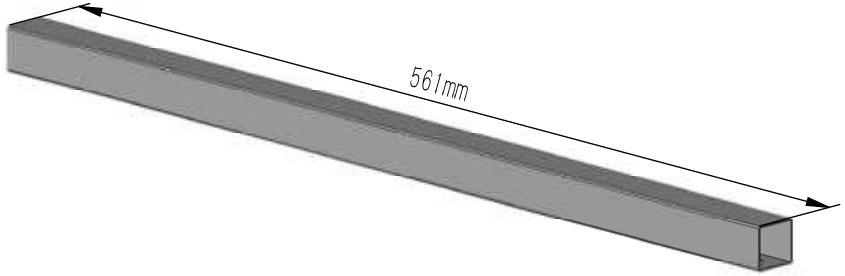

J_1 12X

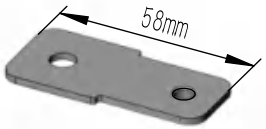

J_2 4X

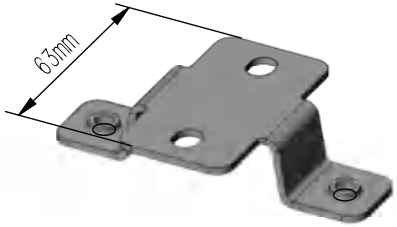

J_3 10X

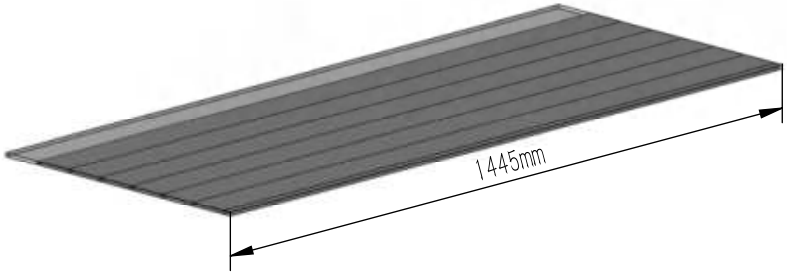

K_1 6X

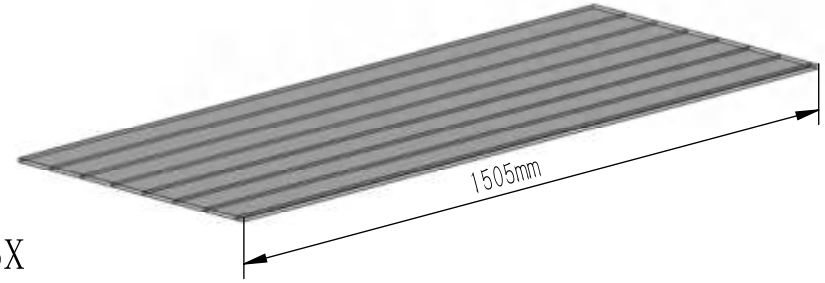

K_2 6X

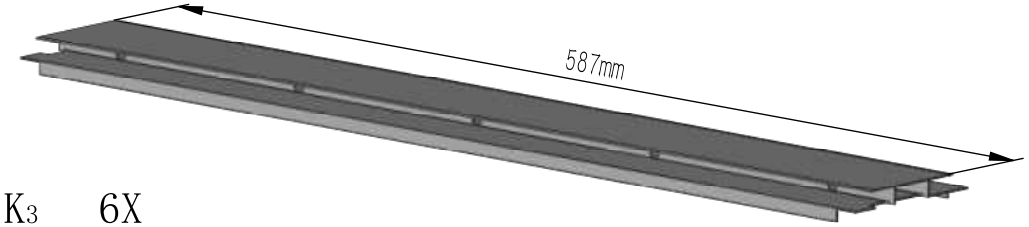

K_3 6X

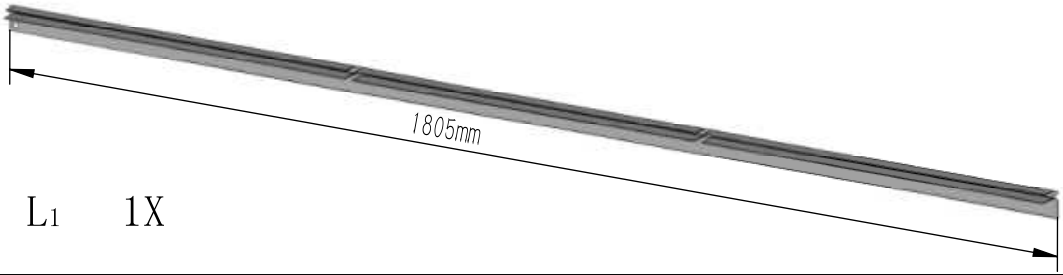

L_1 1X



L_2 1X

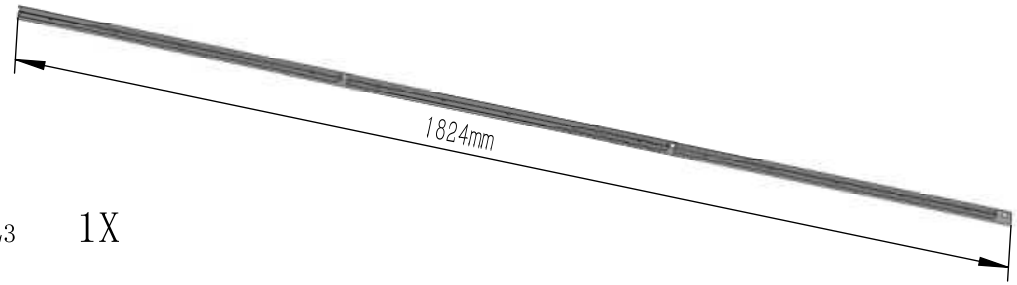

L_3 1X

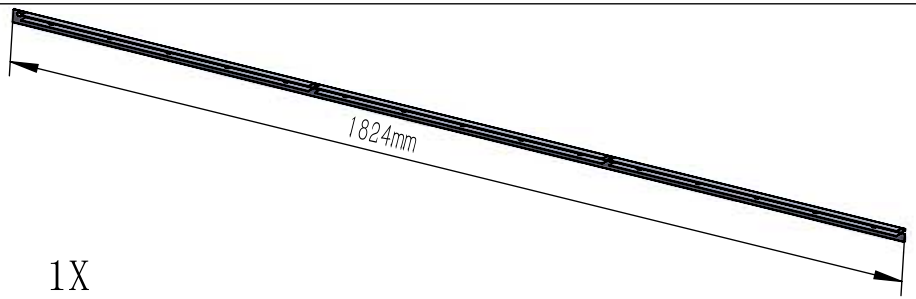

L_4 1X

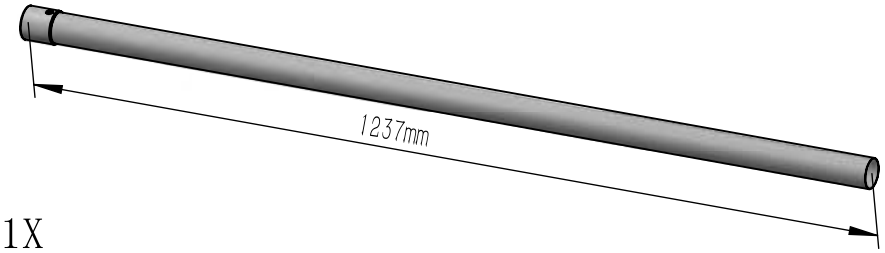

M_1 1X

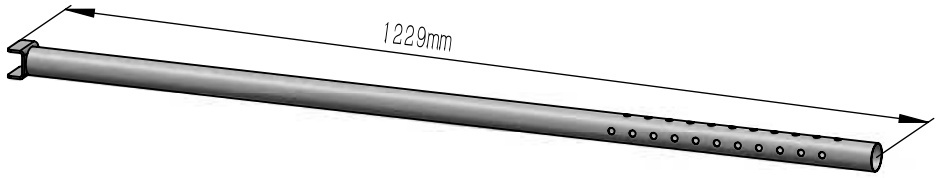

M_2 1X

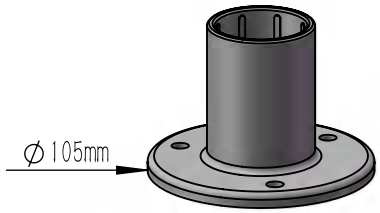

M_3 1X

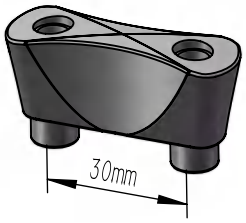

M_4 12X

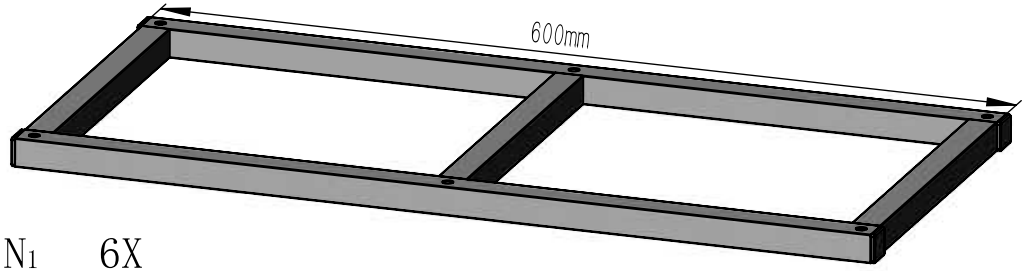

N_1 6X

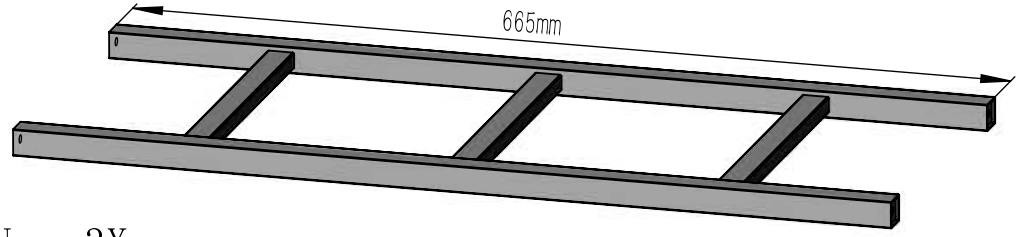

N_2 3X

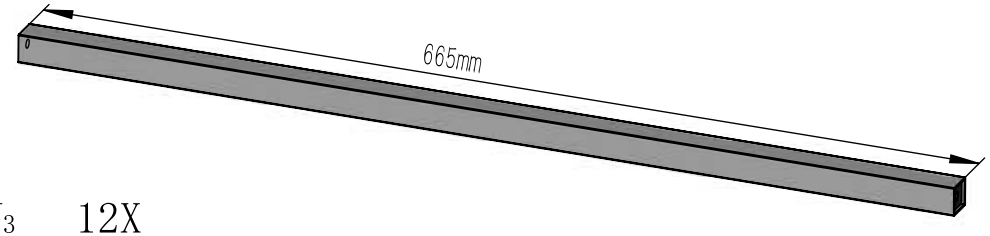

N_3 12X

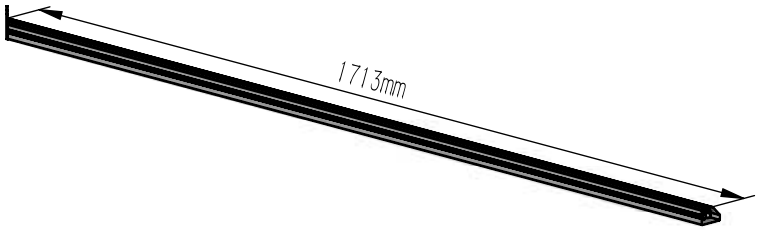

O_1 1X

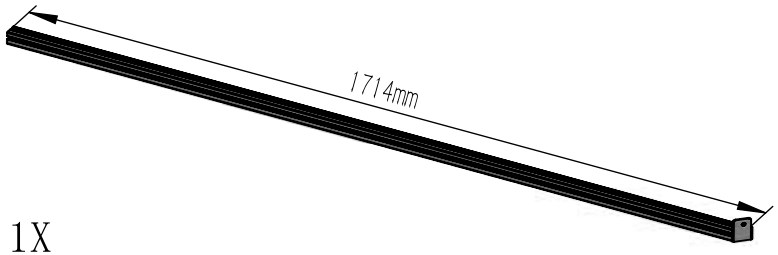

O_2 1X

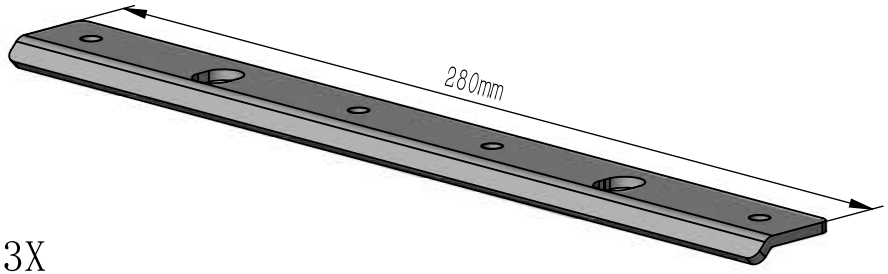

O_3 3X



O_4 1X

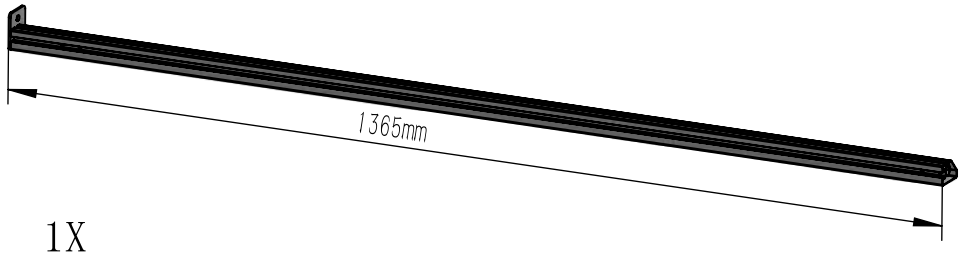

O_5 1X

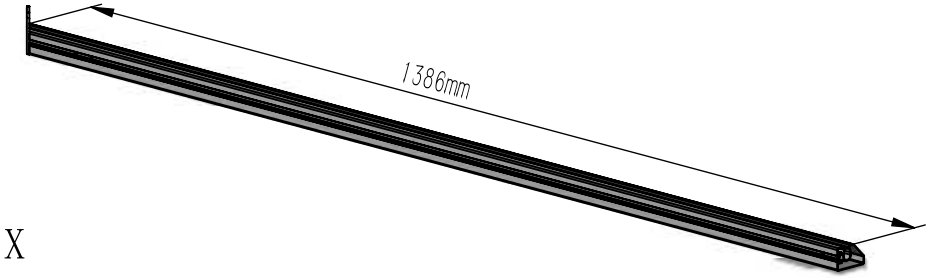

O_6 1X

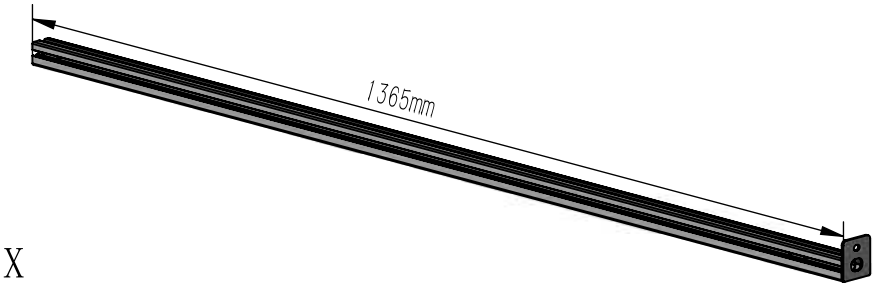

O_7 1X

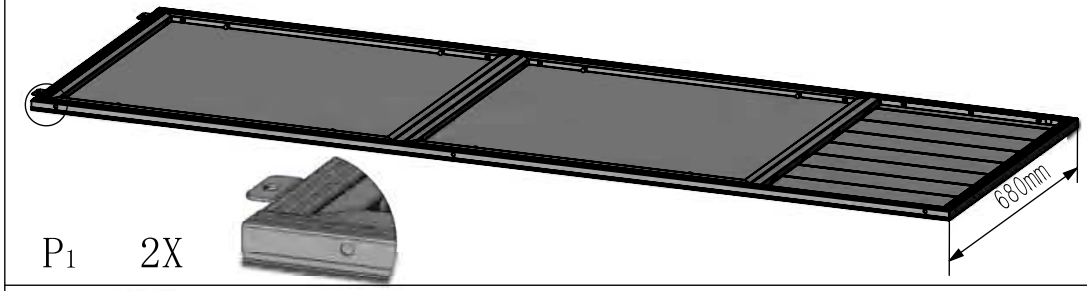

P_1 2X

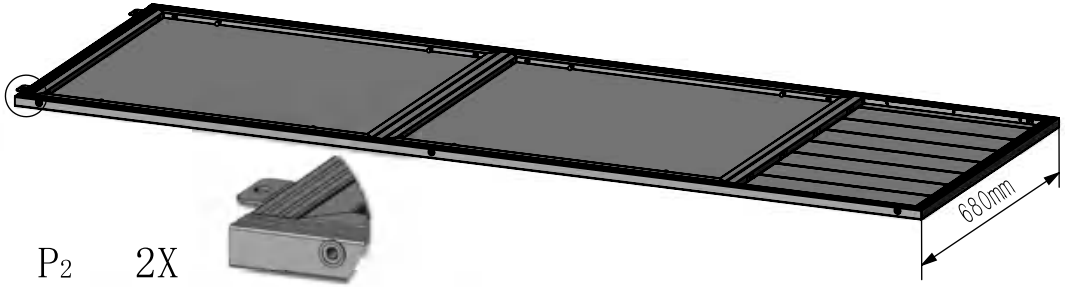

P_2 2X

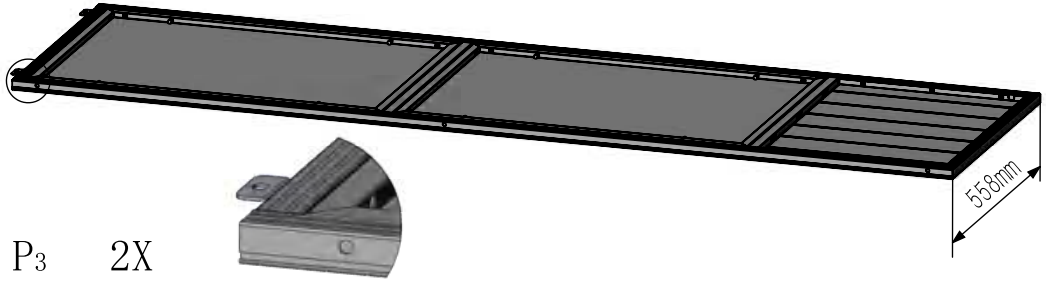

P_3 2X

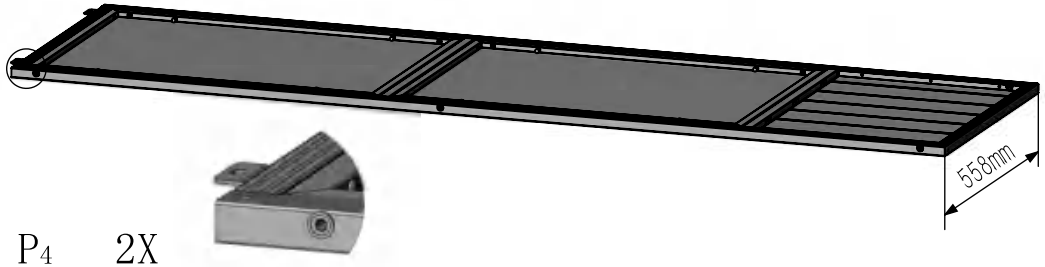

P_4 2X

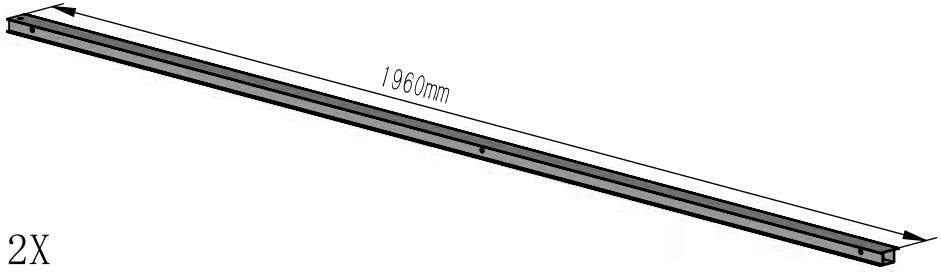

Q_1 2X

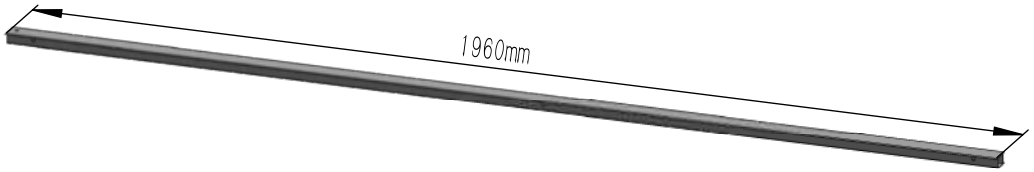

Q_2 2X

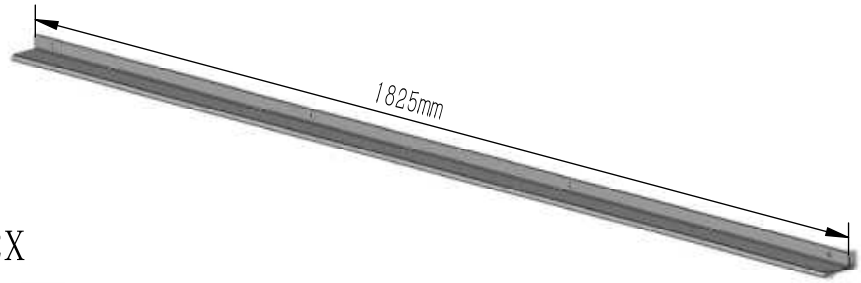

R_1 2X

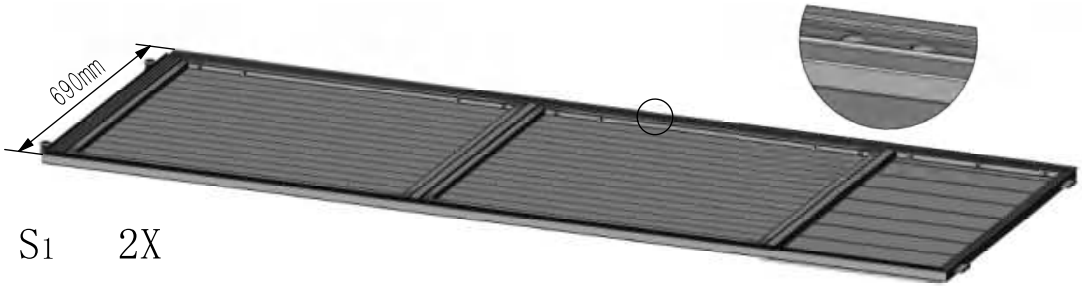

S_1 2X

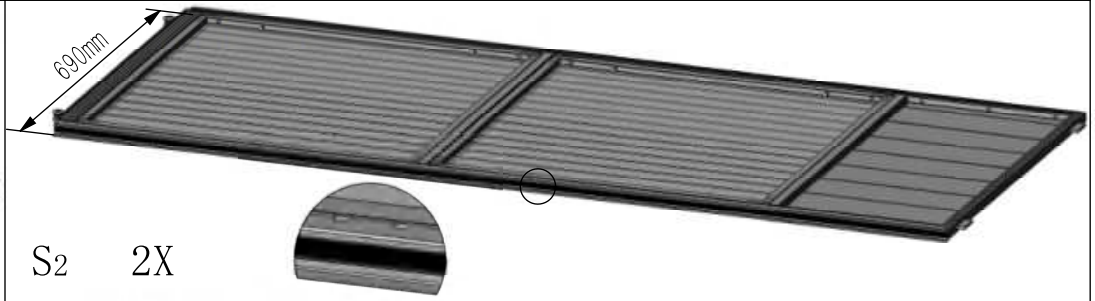

S_2 2X

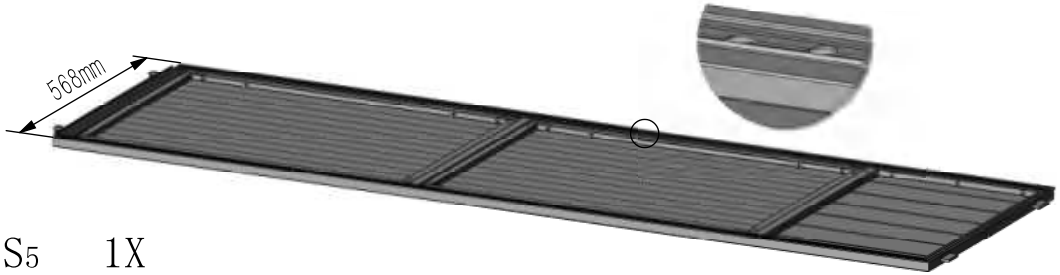

S_5 1X

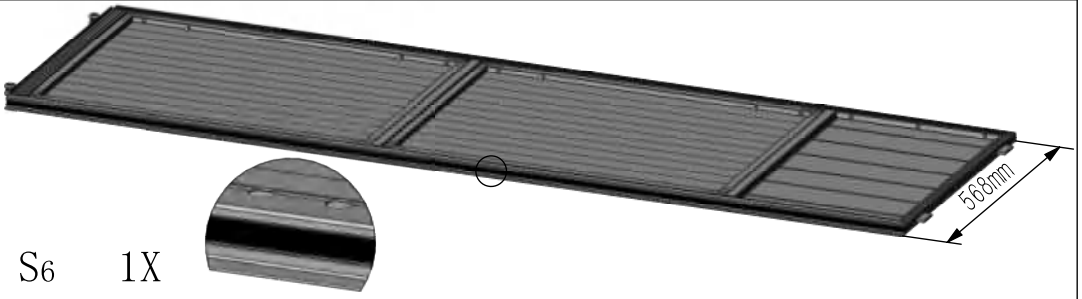

S_6 1X

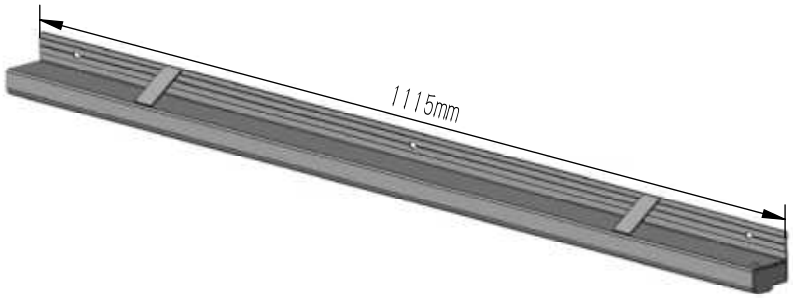

T_1 1X

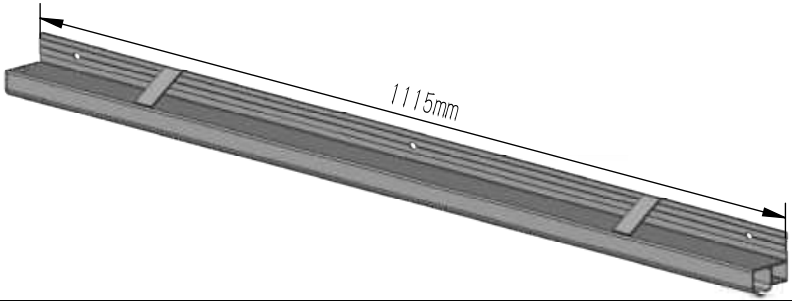

T_2 1X

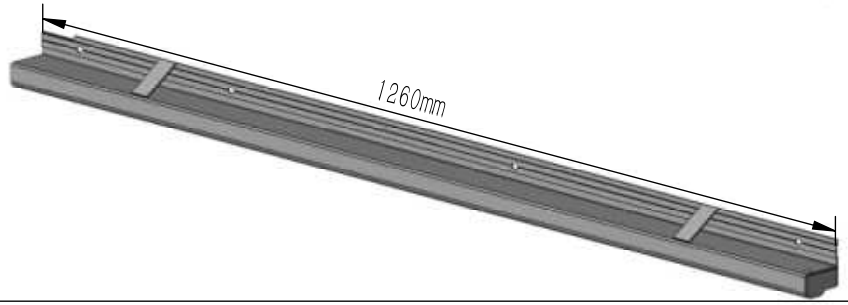

T_3 2X

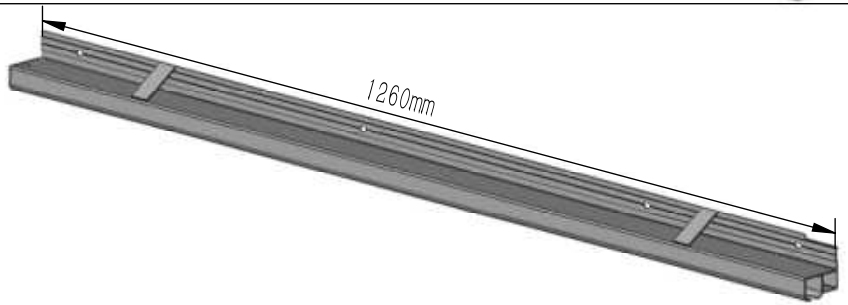

T_4 2X

 1# 6 ST4.8*13	 2# 1 M5*12	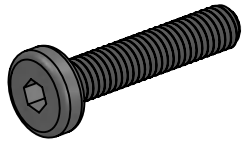 3# 36 M6*30
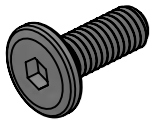 4# 364 M6*16	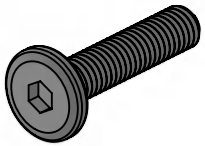 5# 20 M6*28	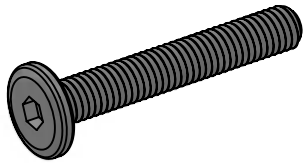 6# 20 M6*40
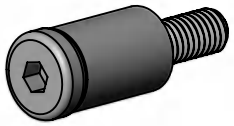 7# 2 M6*12(L20)	 8# 6 M6*15(L30)	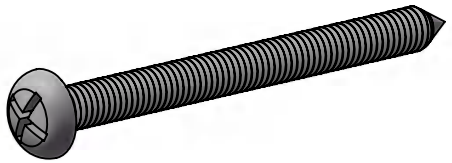 9# 14 ST6*70
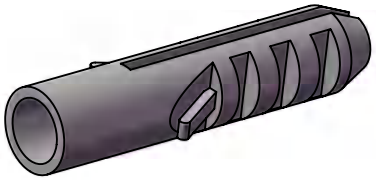 10# 14	 11# 1 Waterproof Tape	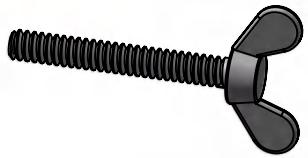 12# 1 M8*60
 13# 1 M8	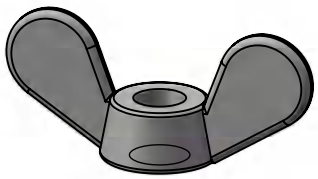 14# 1 M8	 15# 1 Silicone Sealant

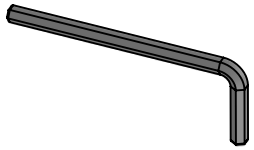 16# 1 S4		
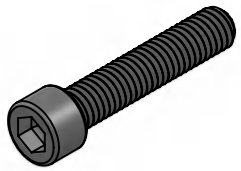 19# 24 M6*30	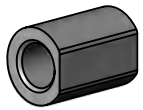 20# 24	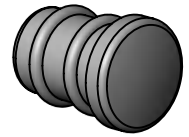 21# 24
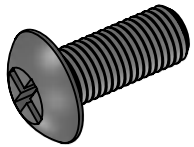 22# 24 M4*10	 23# 12 M4	 24# 20 Metal Square Nuts M6
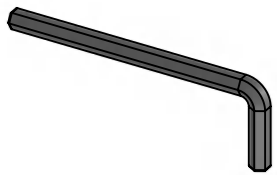 25# 1 S5	 26# 6	 27# 2 D18/d6
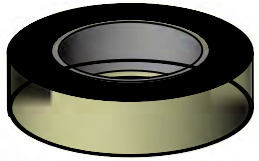 28# 1 Anti-Dust Tape		

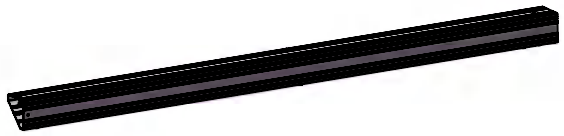

A1 1X

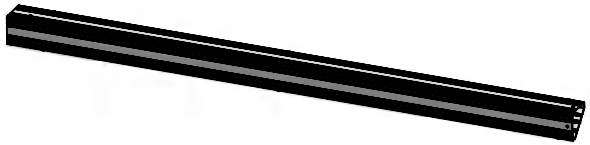

A2 1X

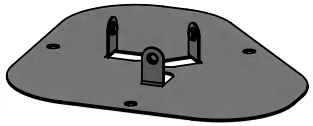

A7 2X

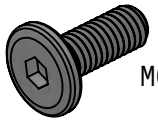

4# 6X

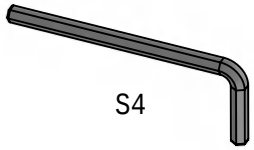

16# 1X

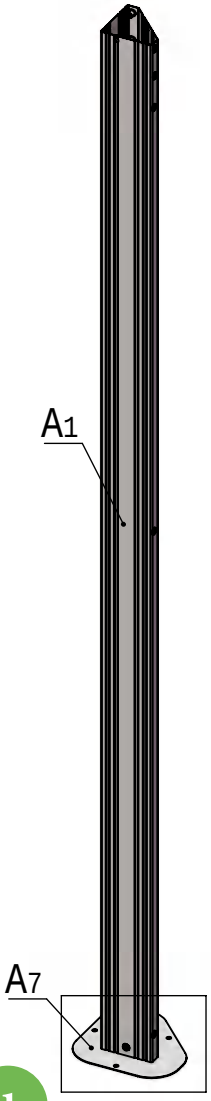

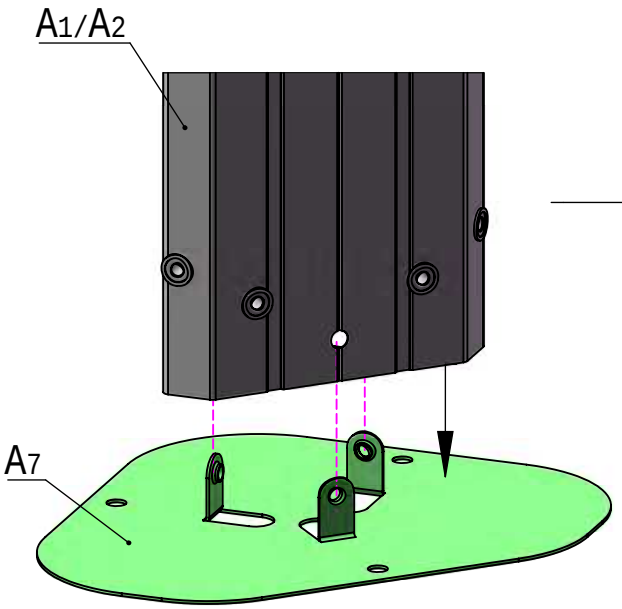

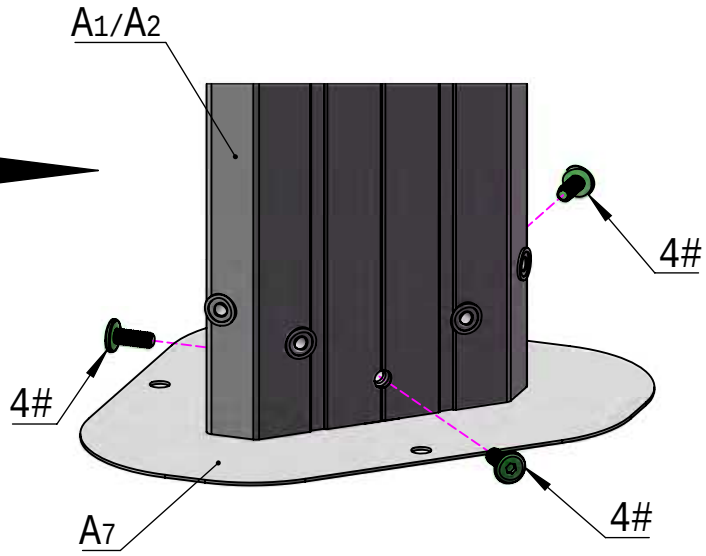

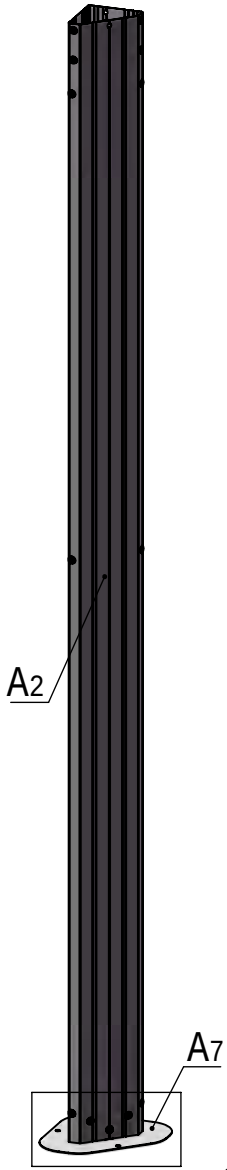

1



A3 1X



A4 1X



A8 2X

4# 8X



16# 1X

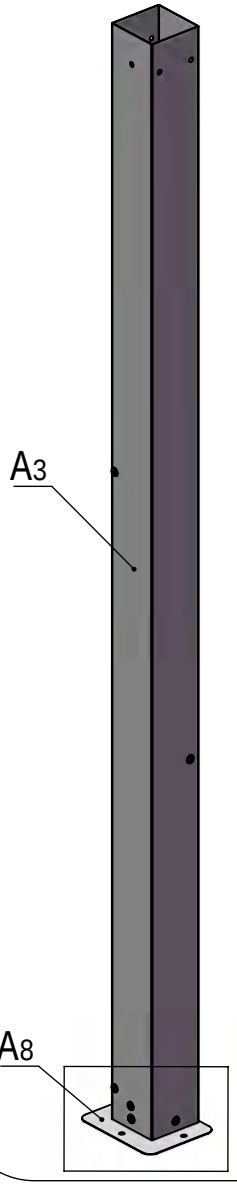

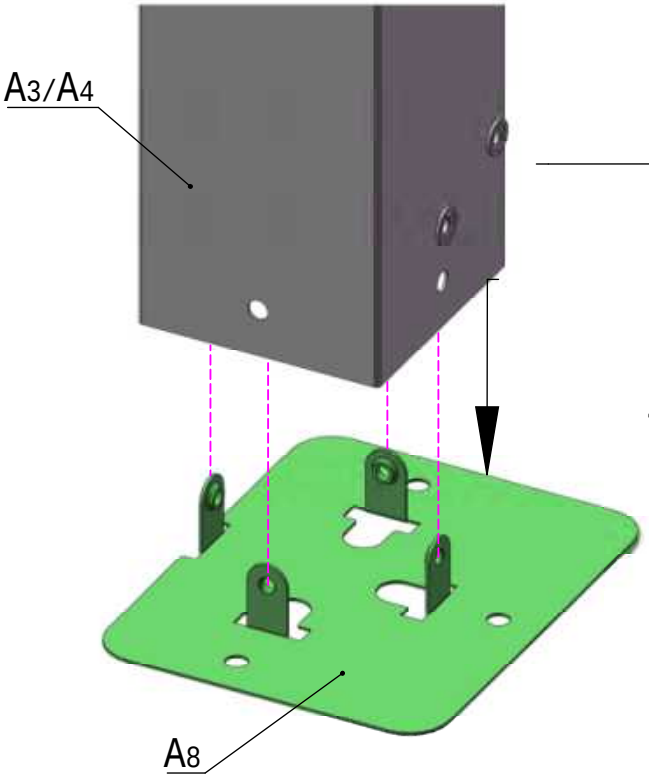

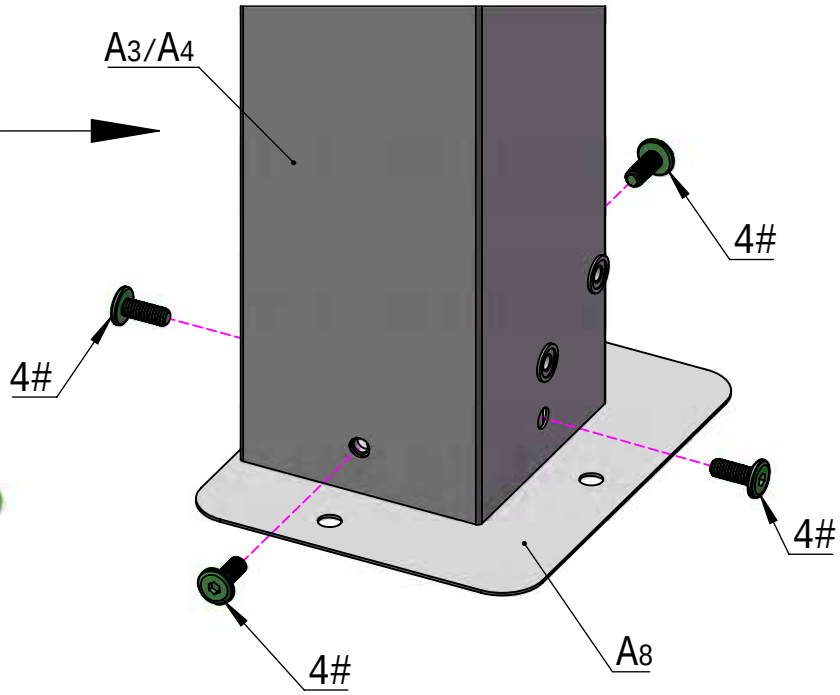

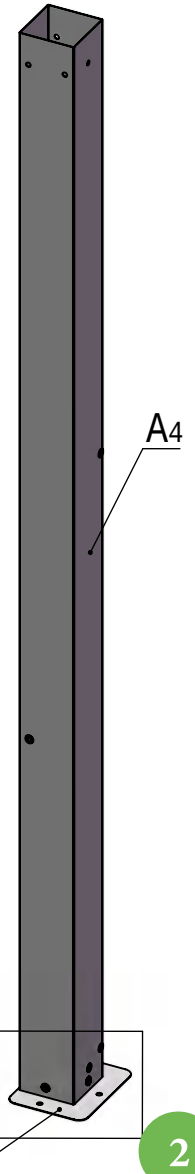

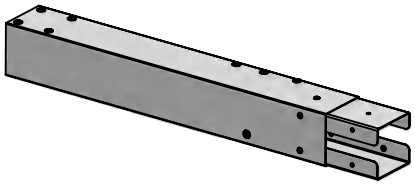

A5 1X

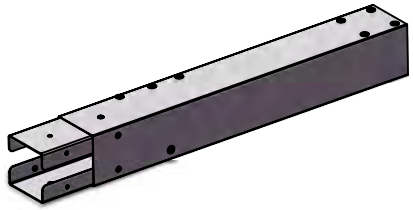

A6 1X

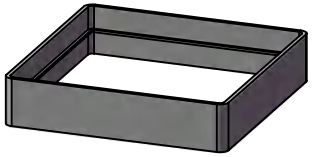

A9 2X

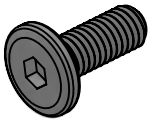

4# 12X

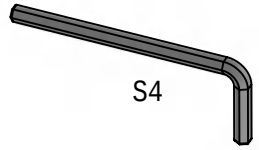

16# 1X

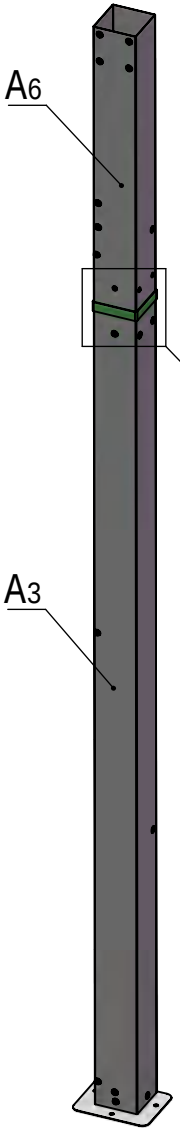

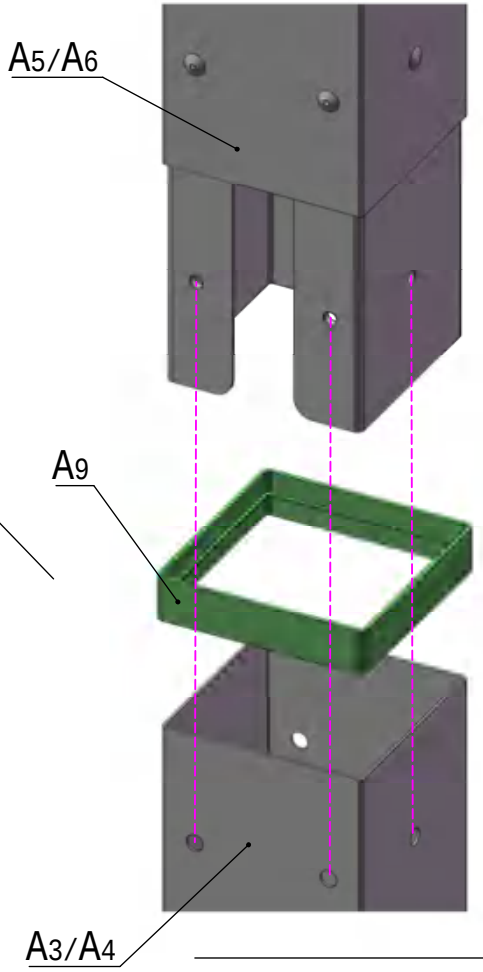

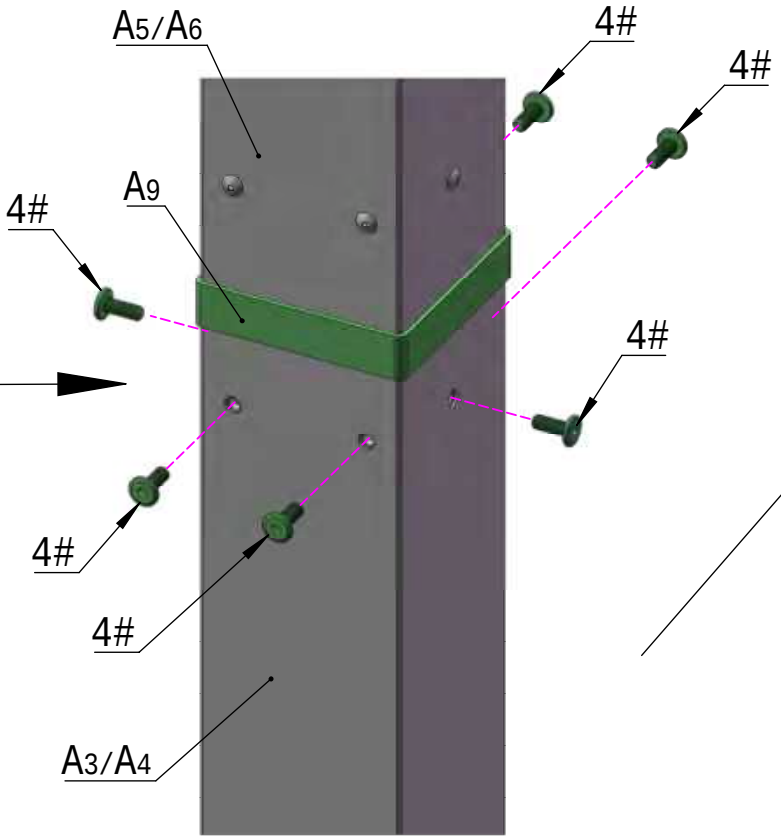

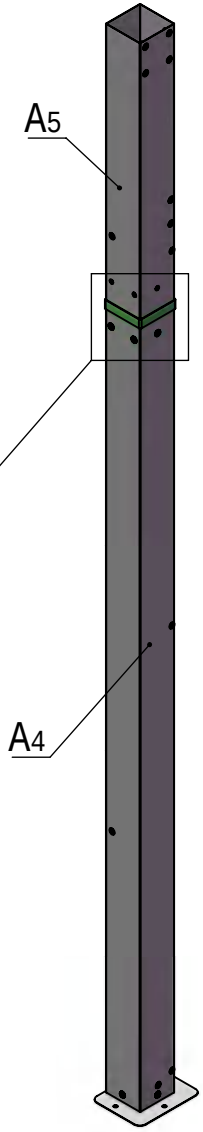

Make sure the correct connection:
A3 and A6 connected, A4 and A5 connected.

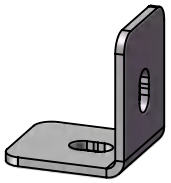

A10 4X

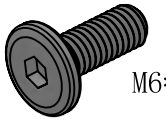

4# 4X

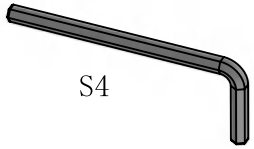

16# 1X

The bracket #A10 is used to fix the post against the wall. If you don't need it fixed, please retain for future use and skip this step.

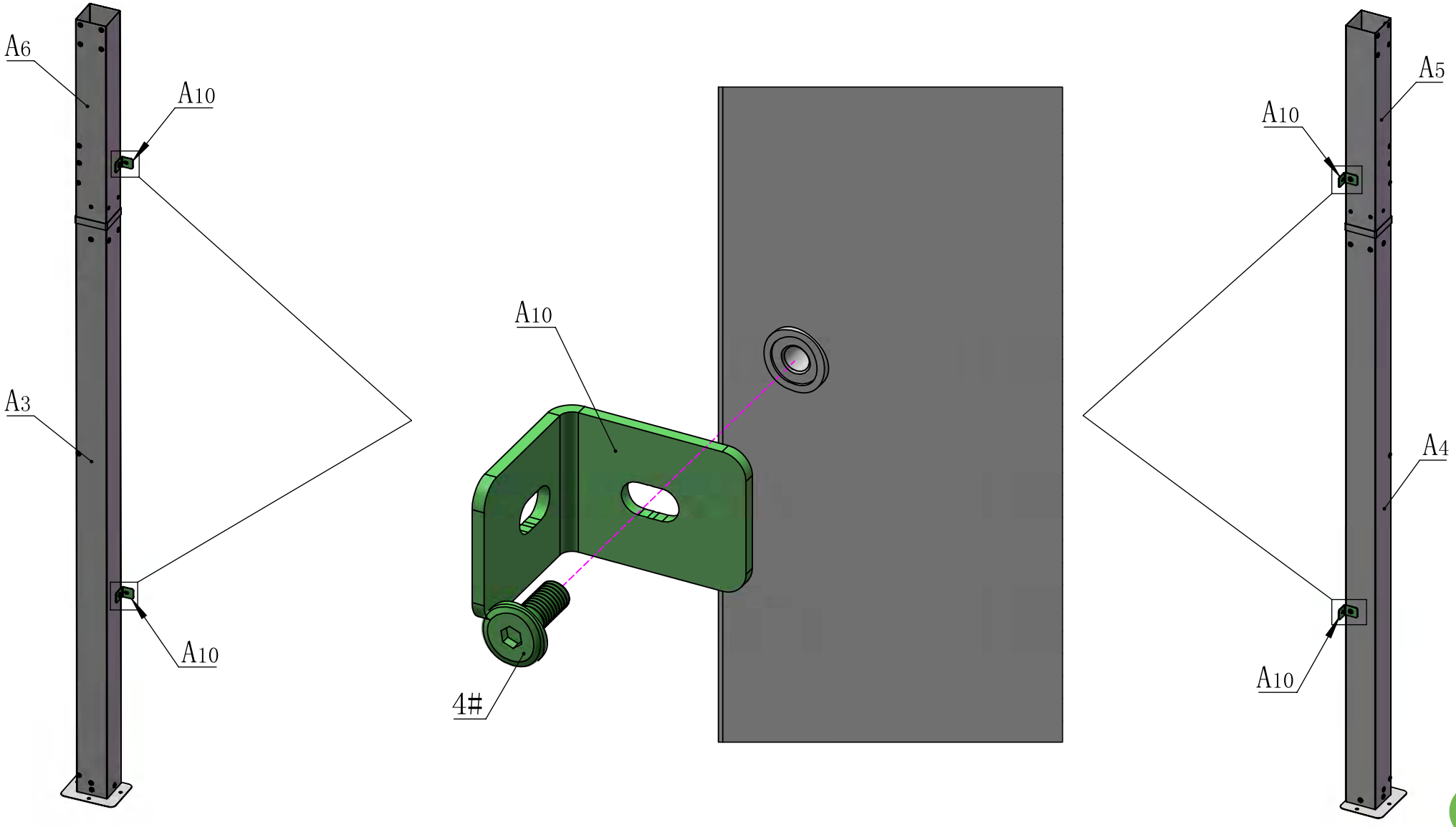

Front Beam Assembly

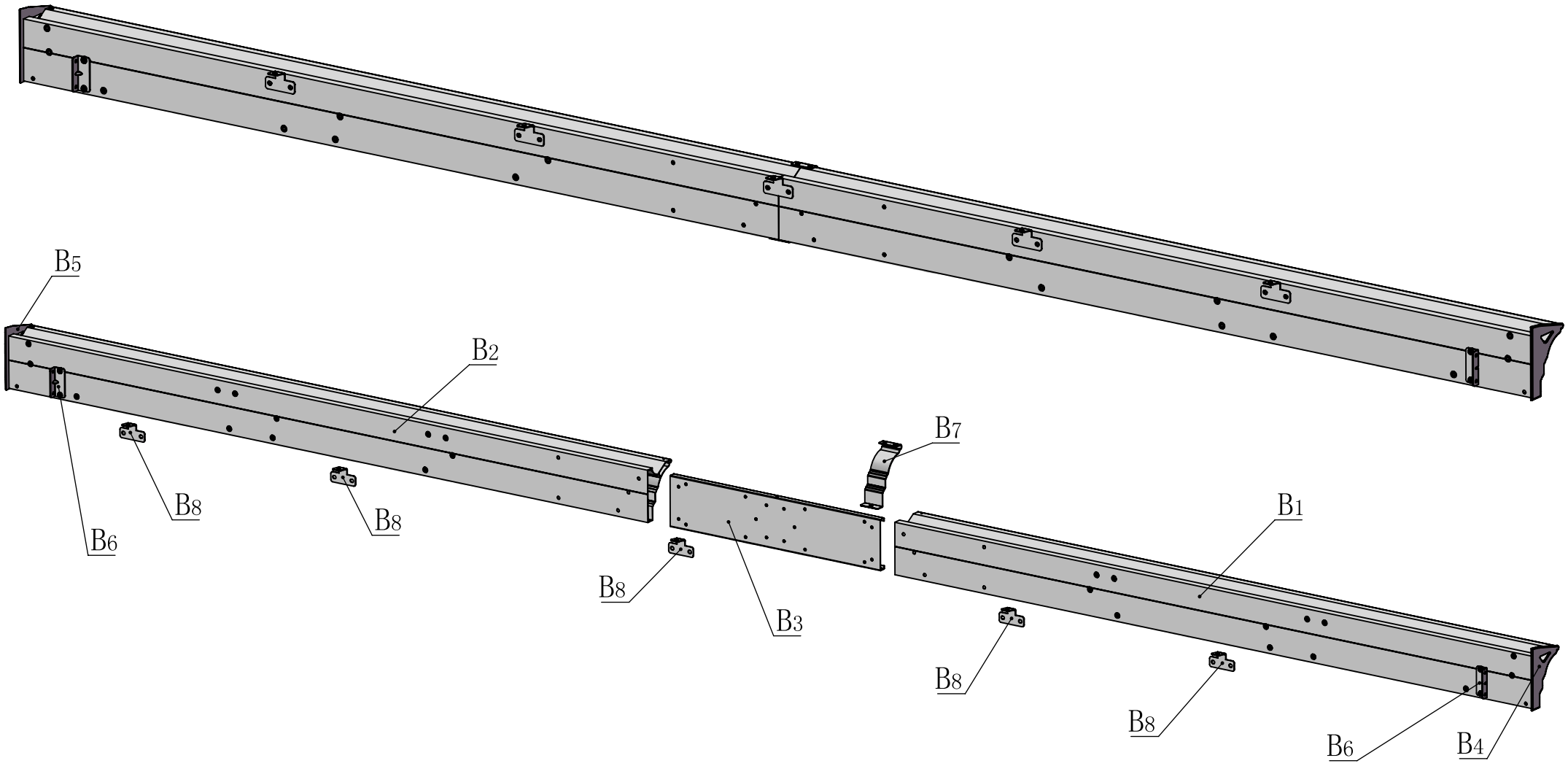

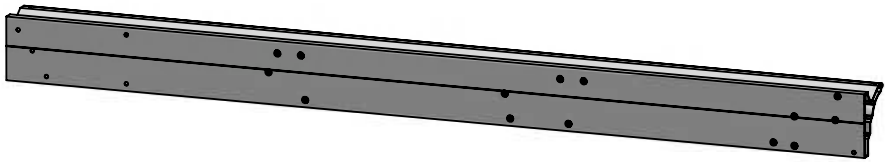

B1 1X



B4 1X



ST4.8*13

1# 2X

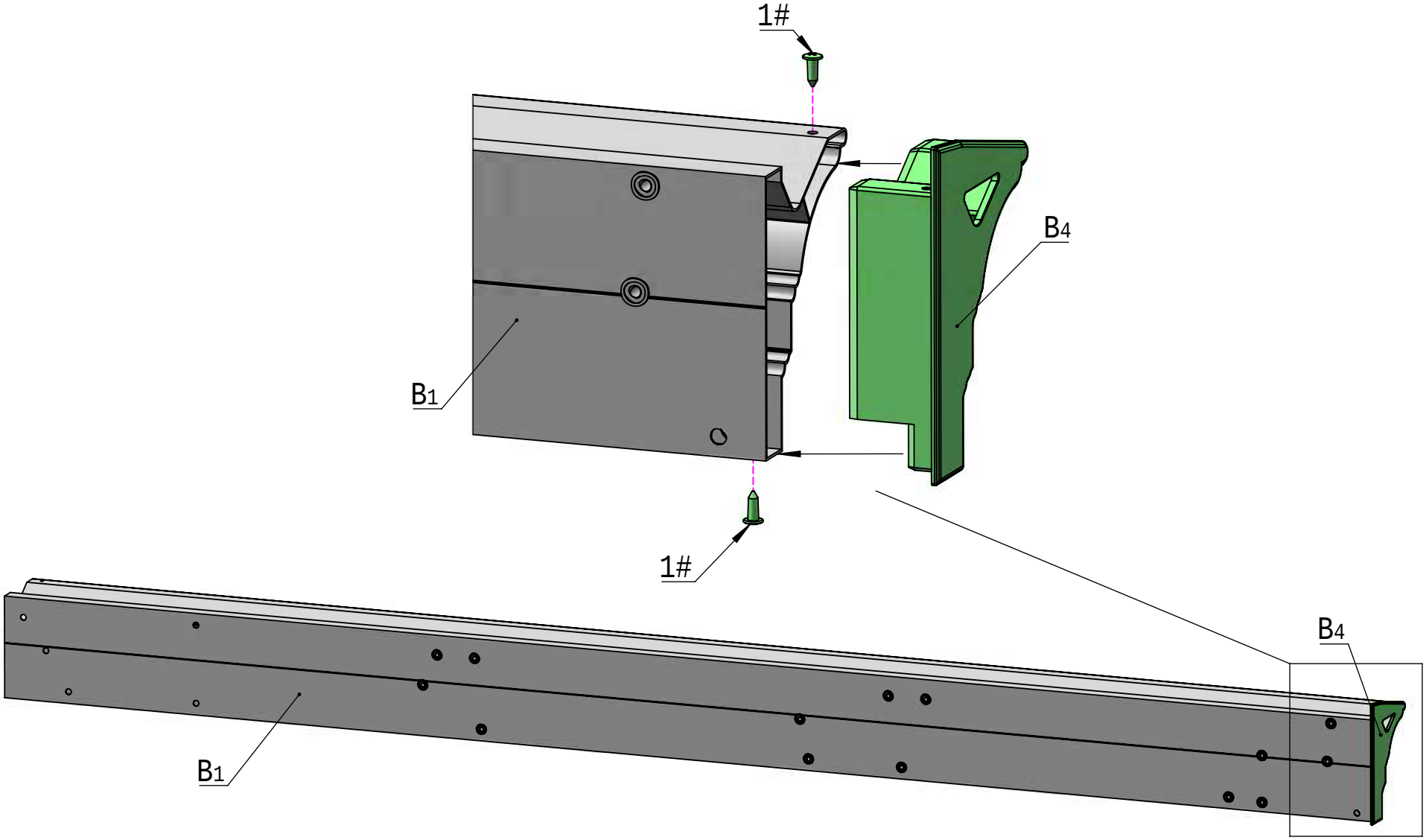

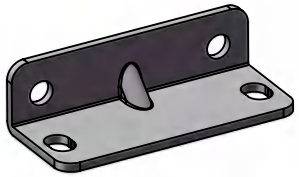

B6 1X

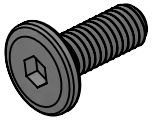

4# 2X

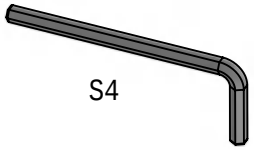

16# 1X

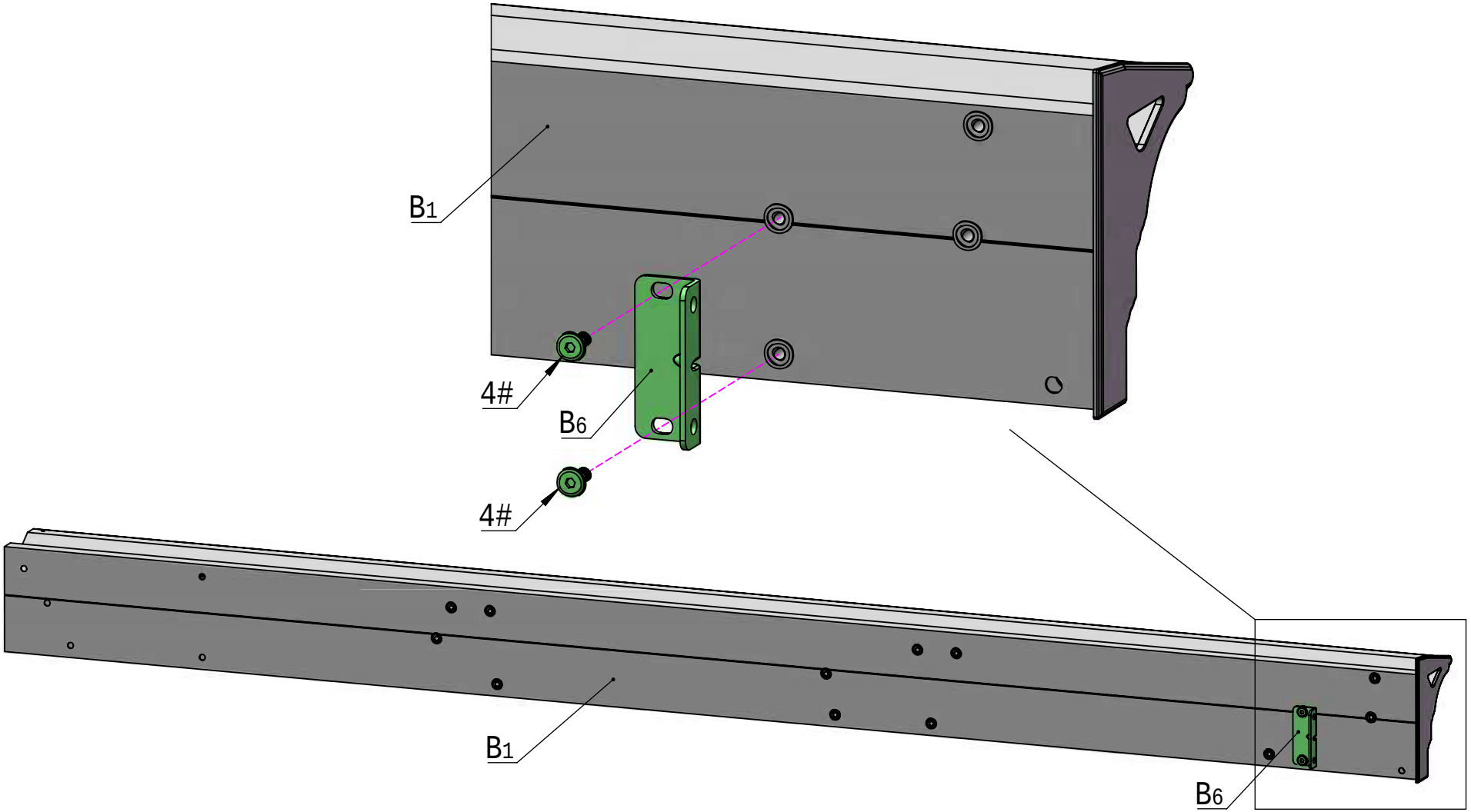

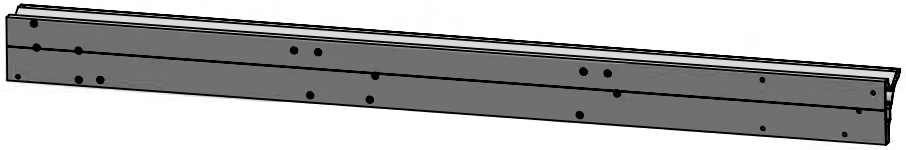

B2 1X



B5 1X



1# 2X

ST4.8*13

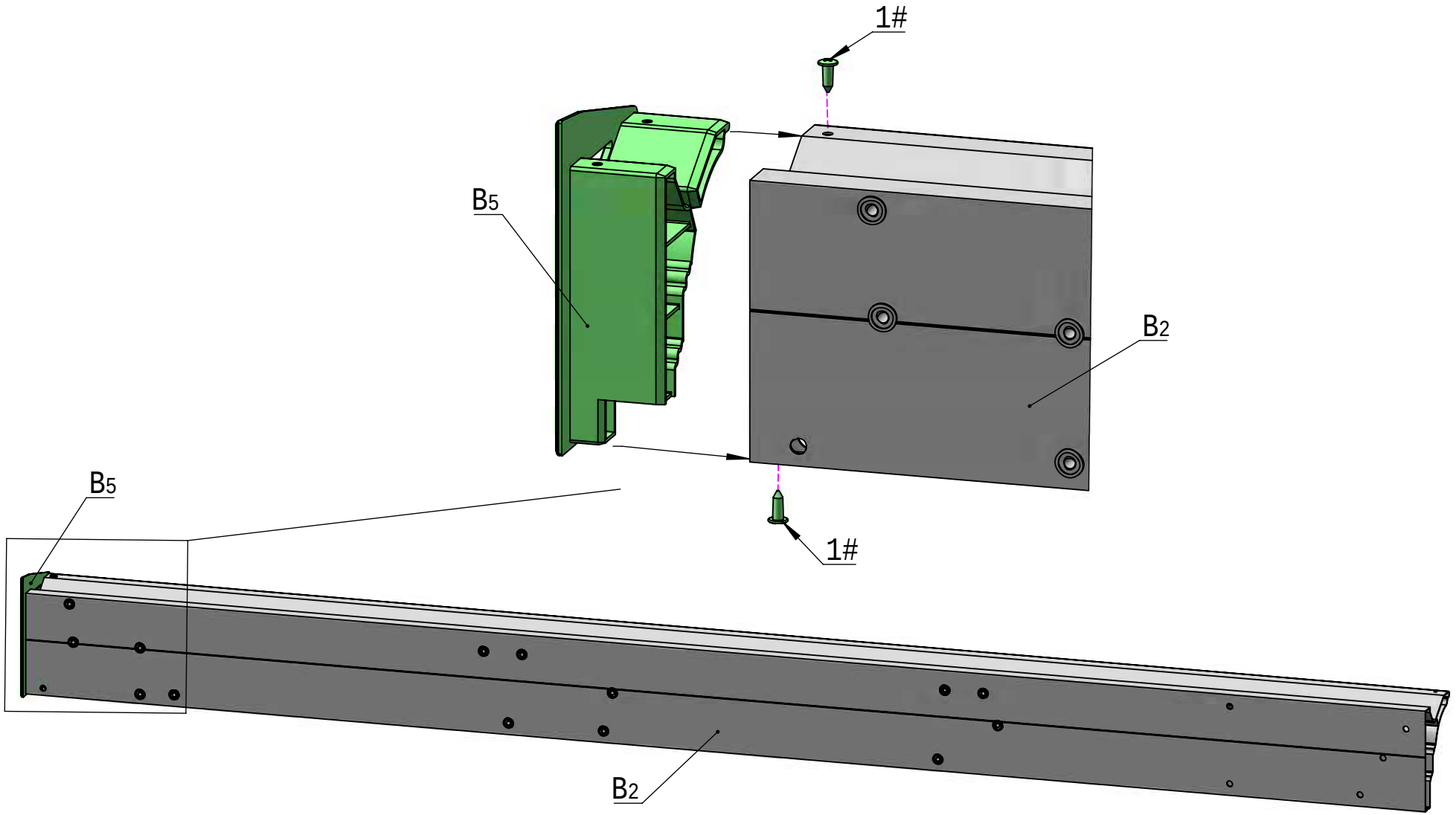

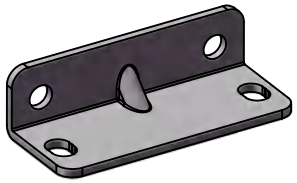

B6 1X

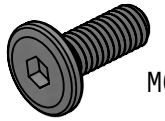

4# 2X

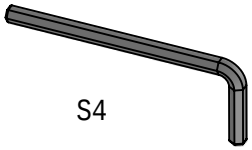

16# 1X

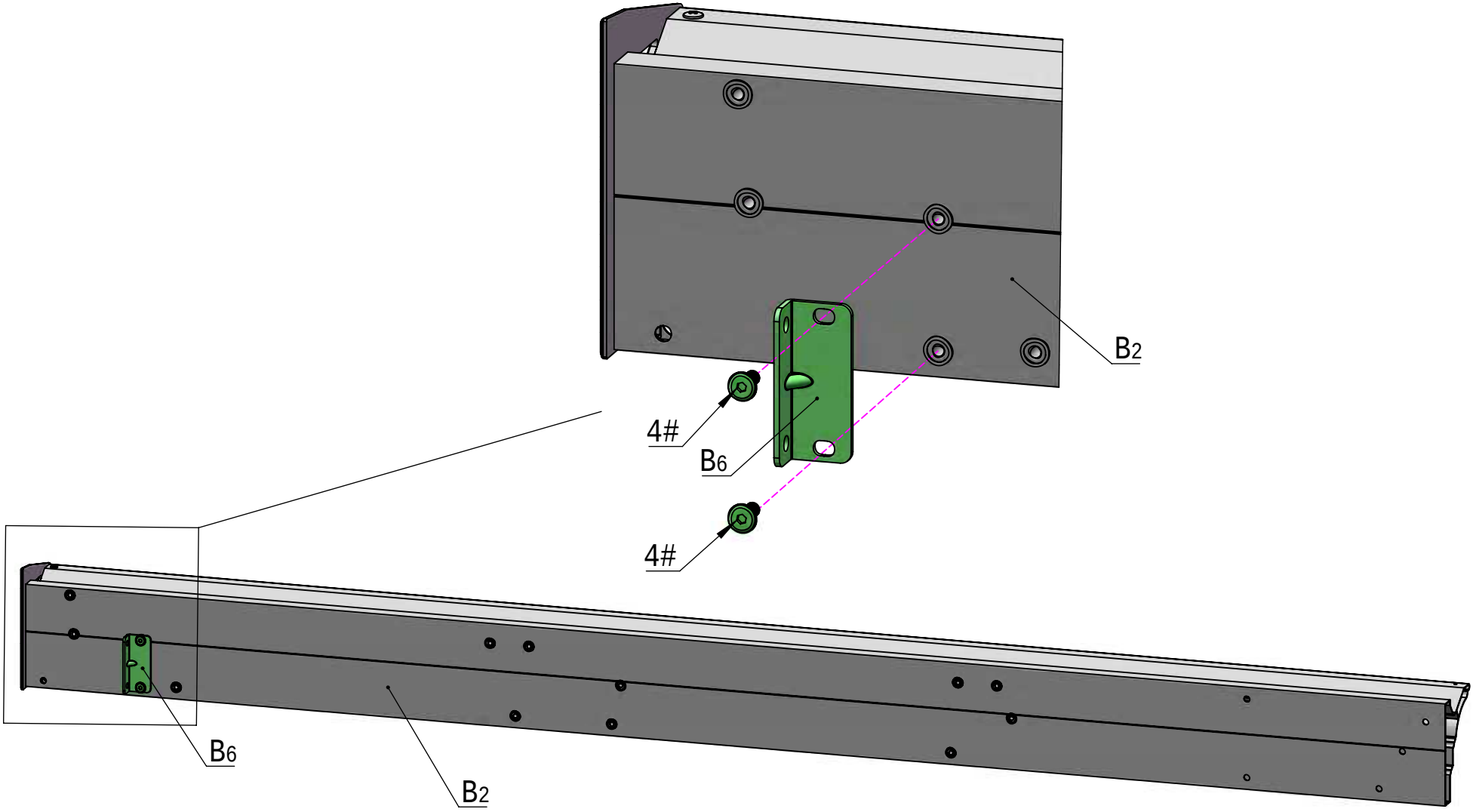

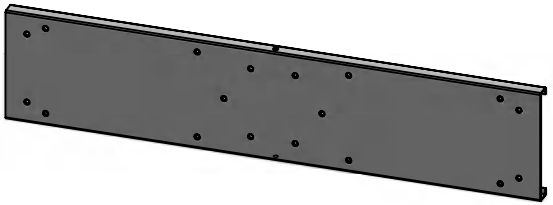

B3 1X

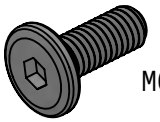

4# 6X

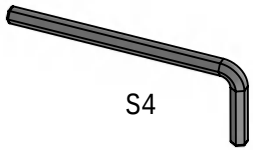

16# 1X

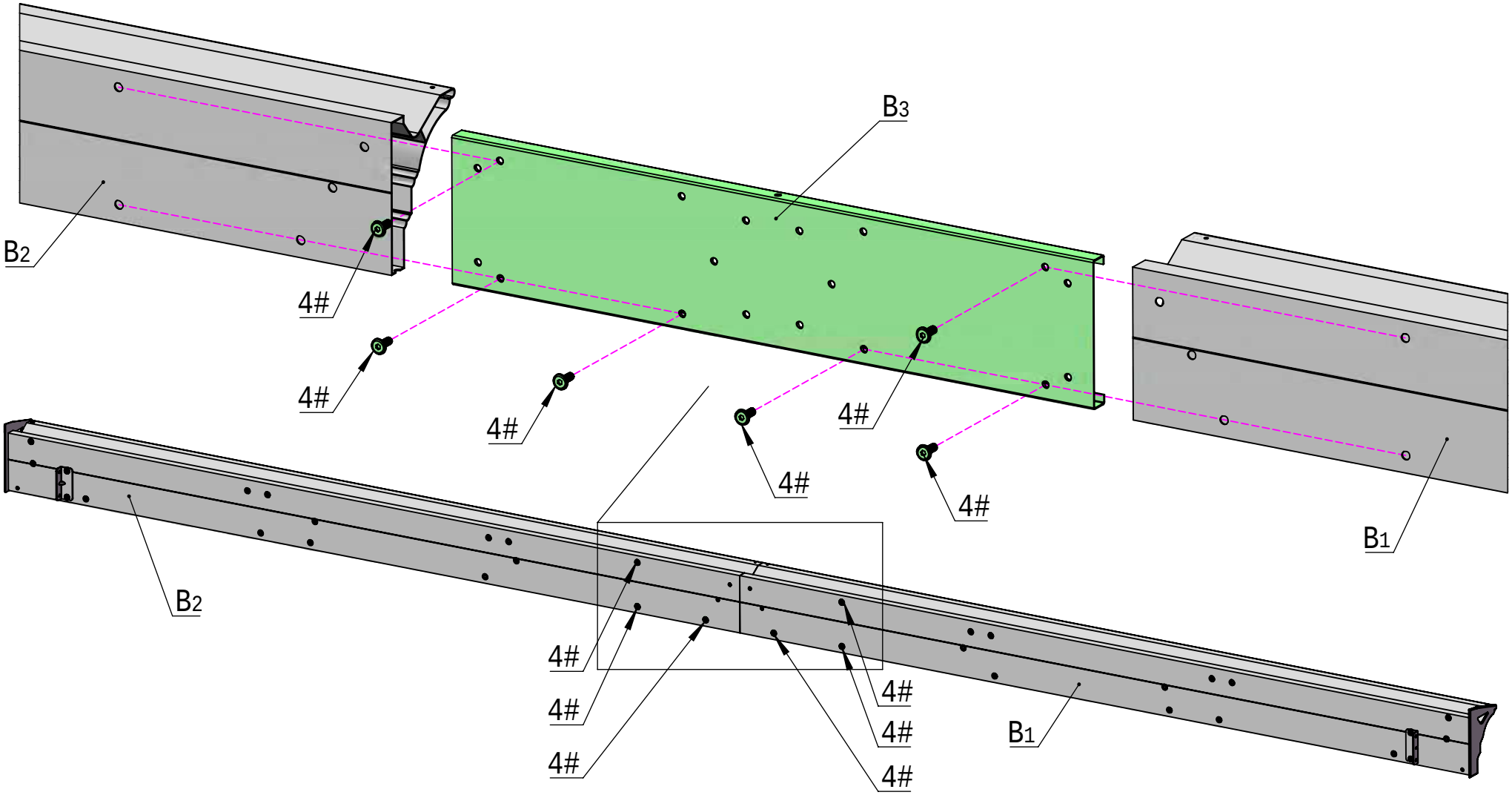

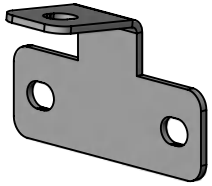

B8 5X



4# 10X

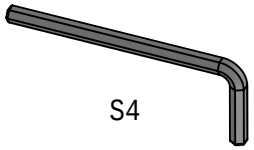

16# 1X

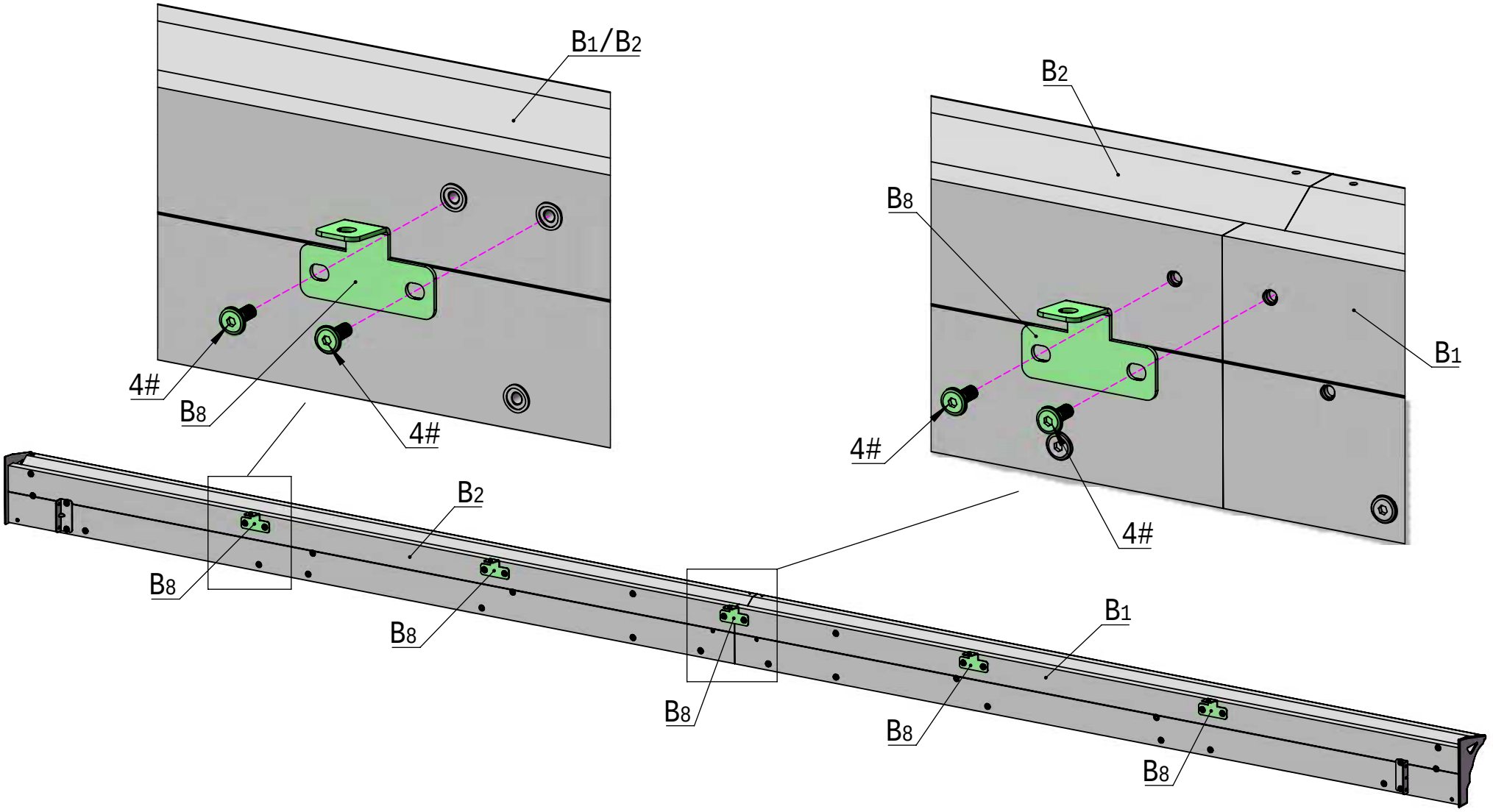



15# 1X

Use silicone sealant (part #15) to affix the gap between the two beams.

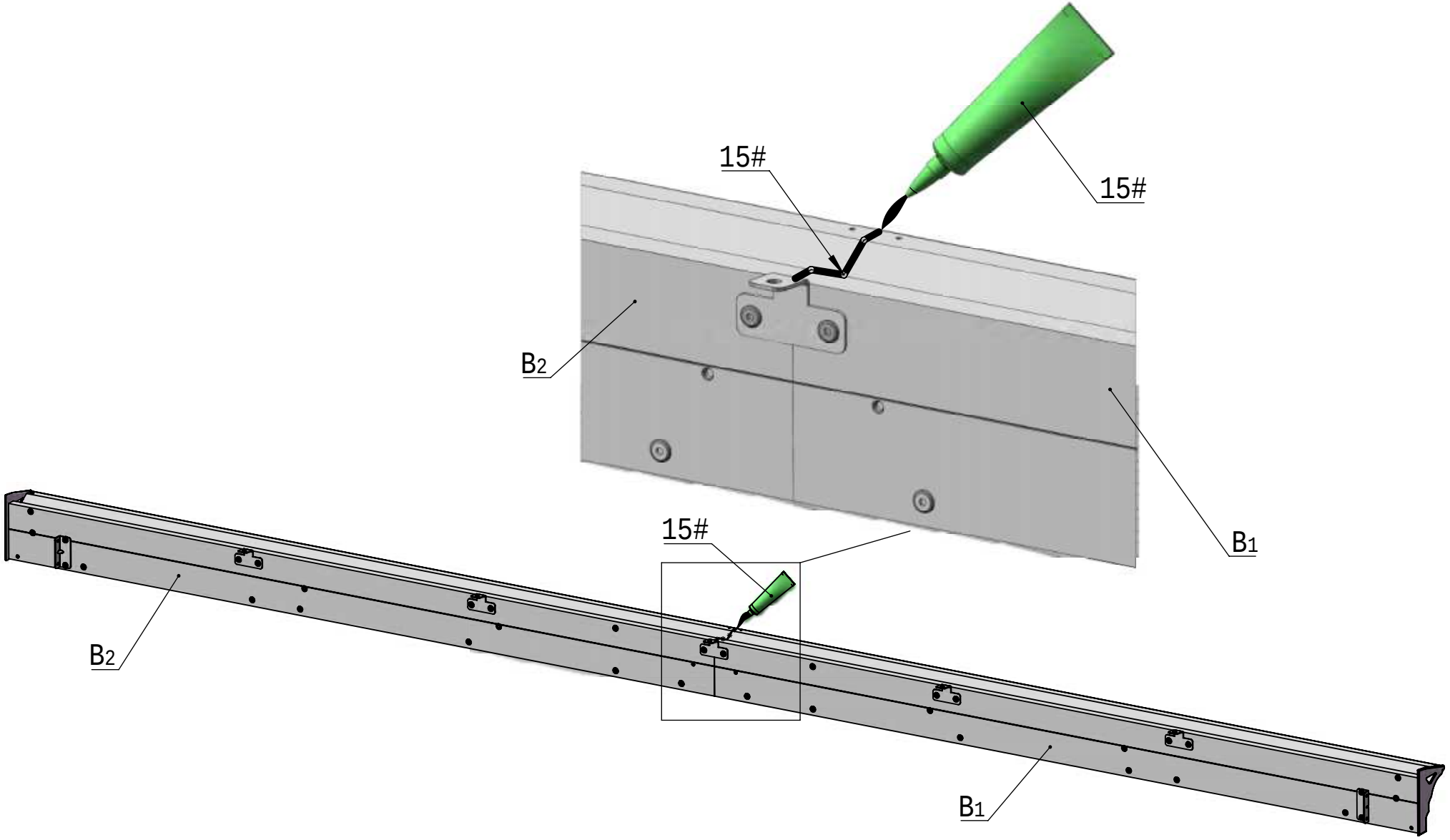

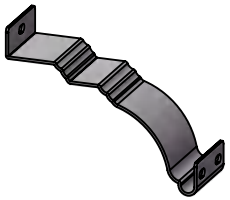

B7 1X



ST4.8*13

1# 2X



M5*12

2# 1X

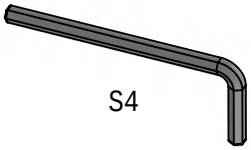

S4

16# 1X

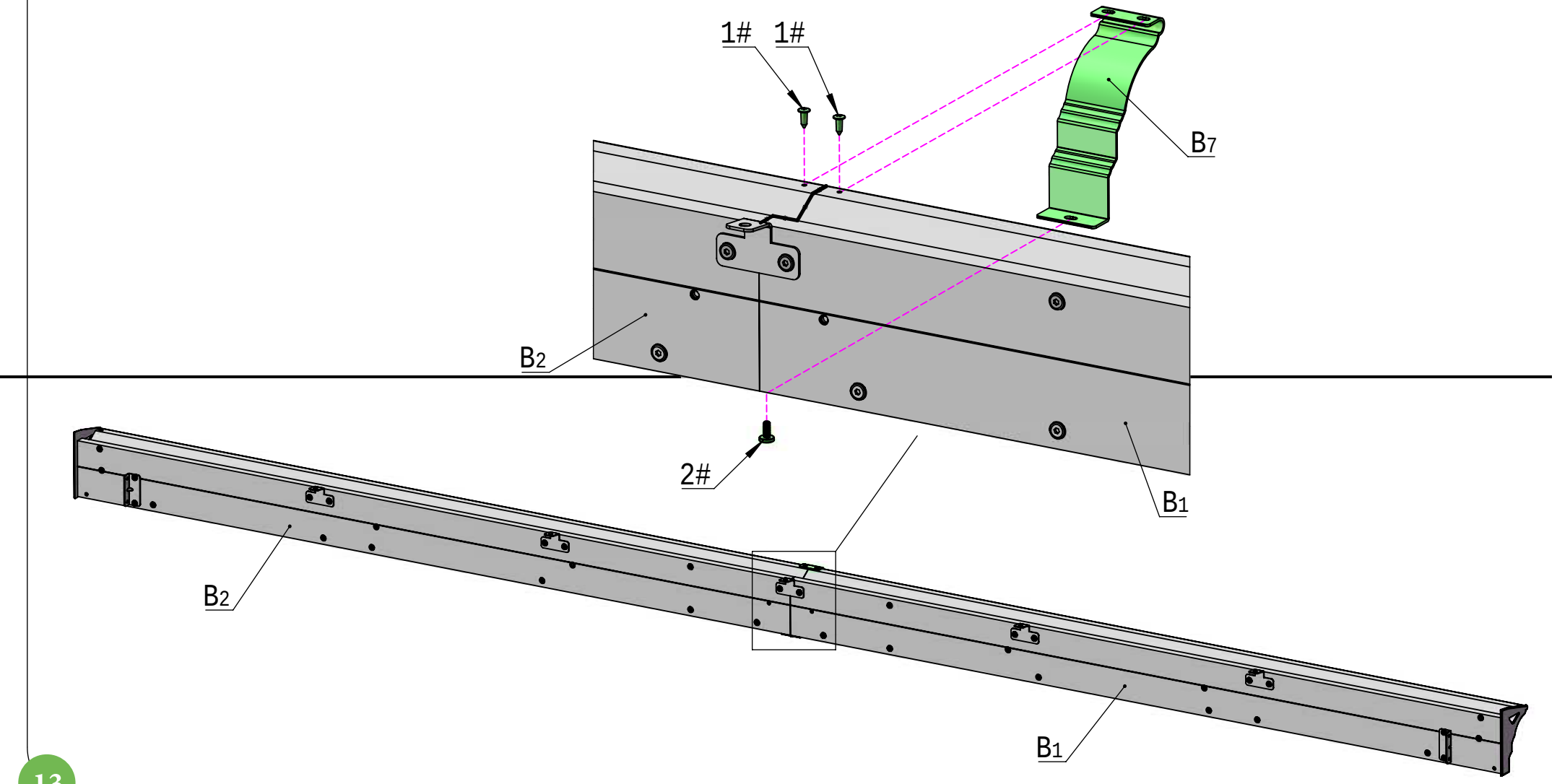

Side Beam Assembly

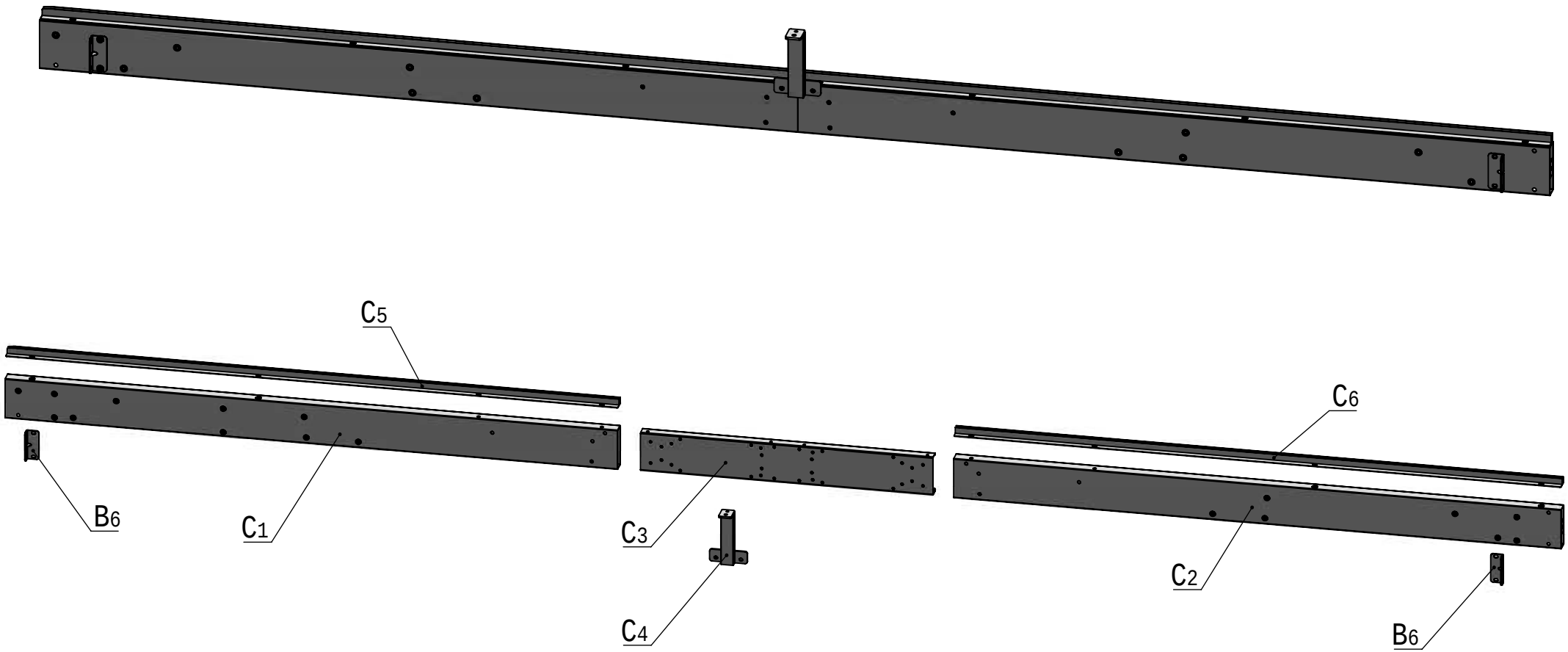

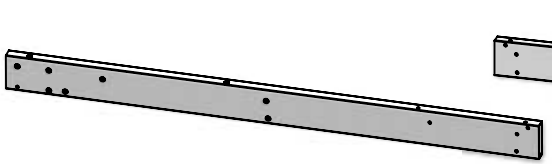

C1 1X

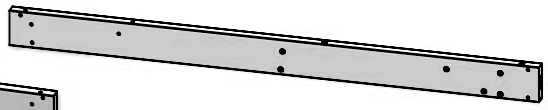

C2 1X

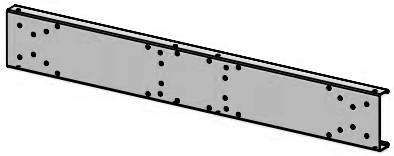

C3 1X

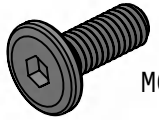

4# 6X

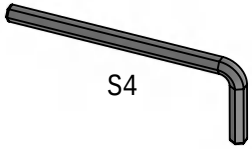

16# 1X

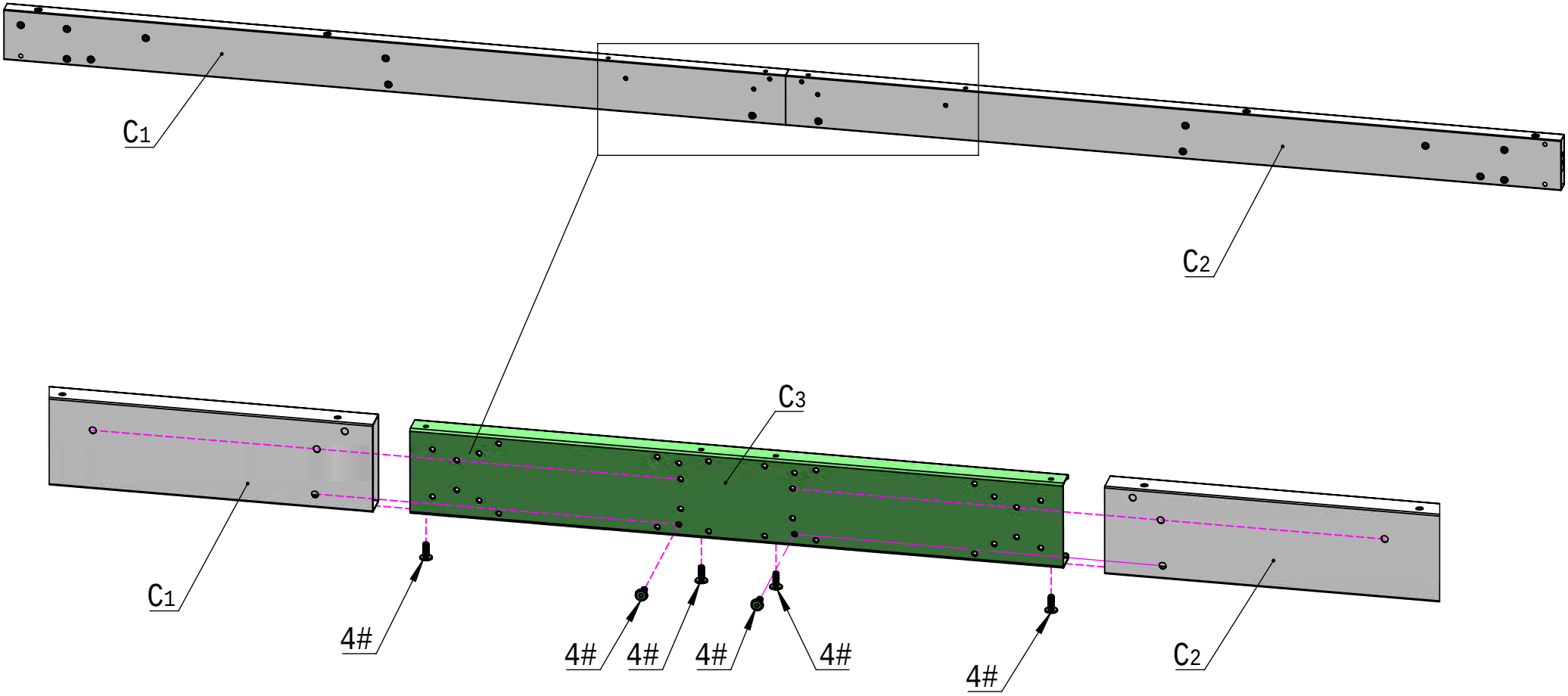

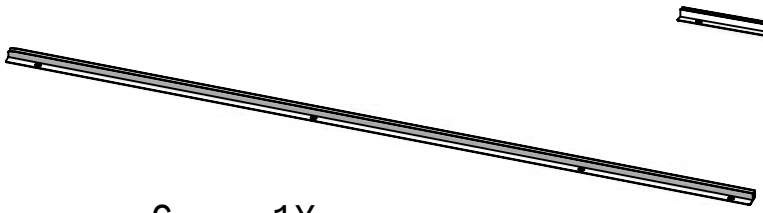

C5 1X

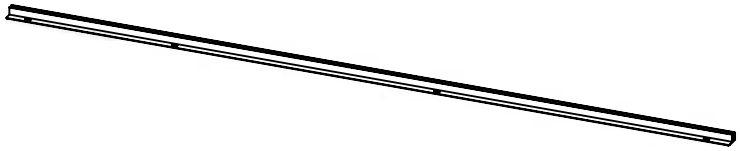

C6 1X

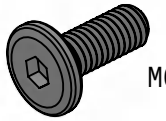

4# 8X

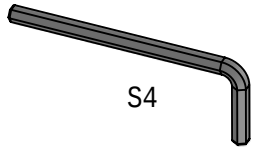

16# 1X

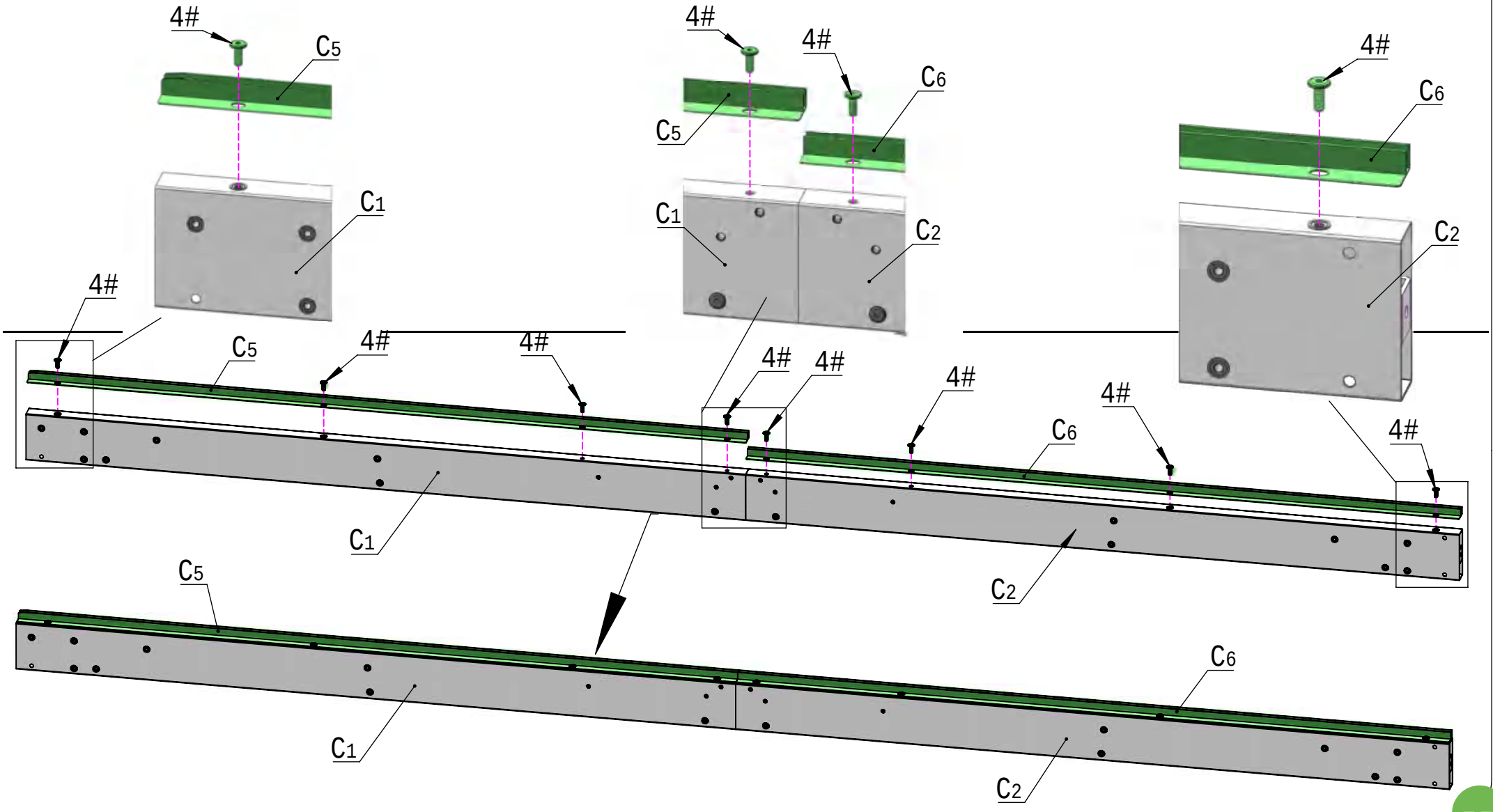

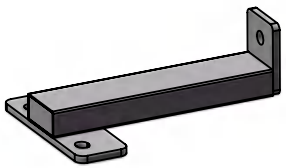

C4 1X

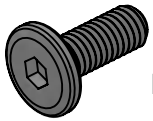

4# 2X

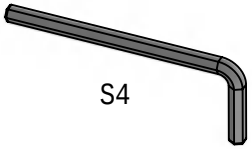

16# 1X

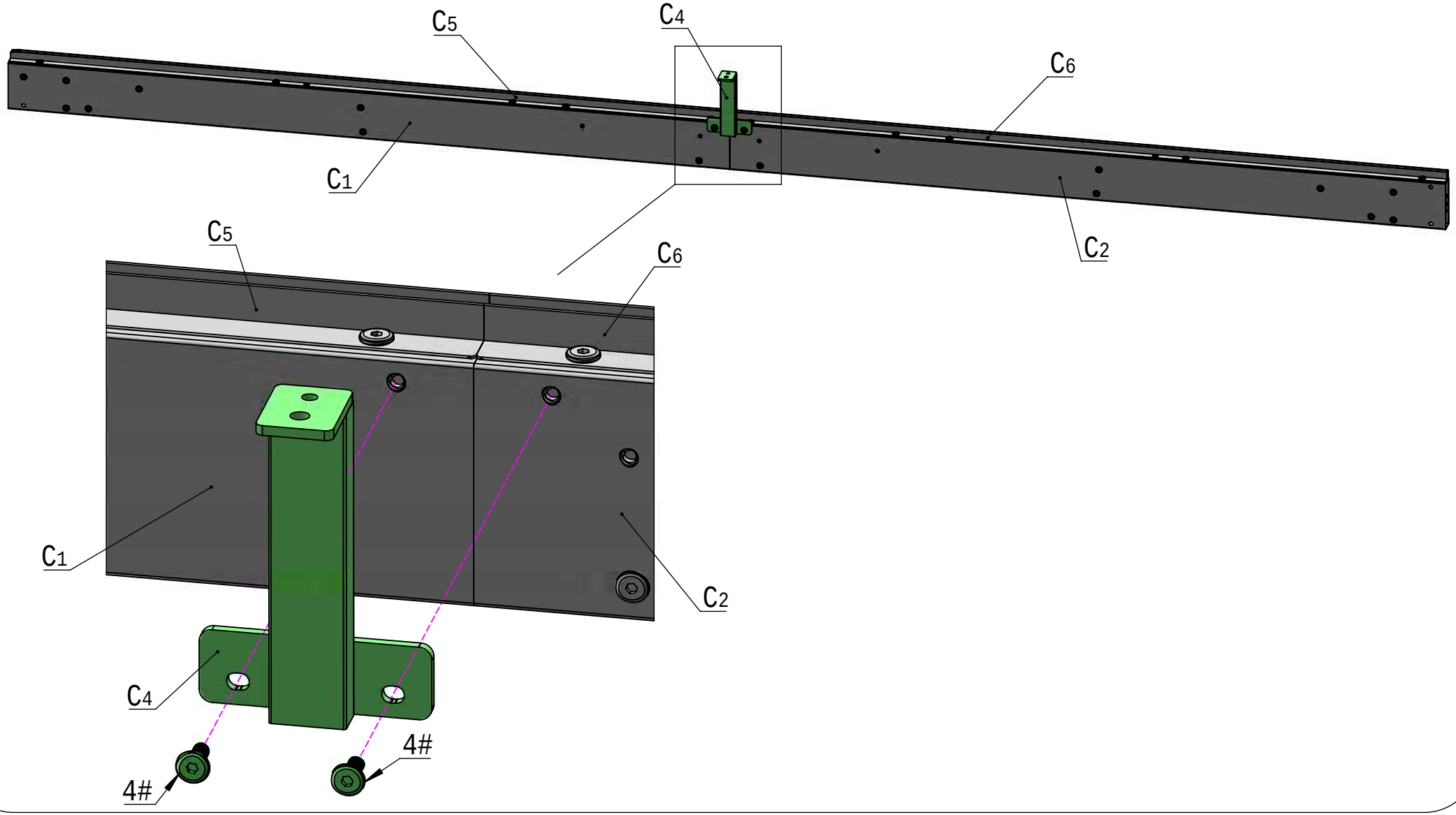

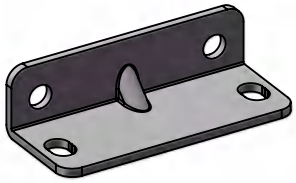

B6 2X

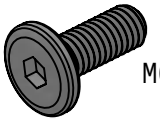

4# 4X

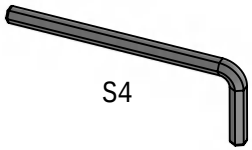

16# 1X

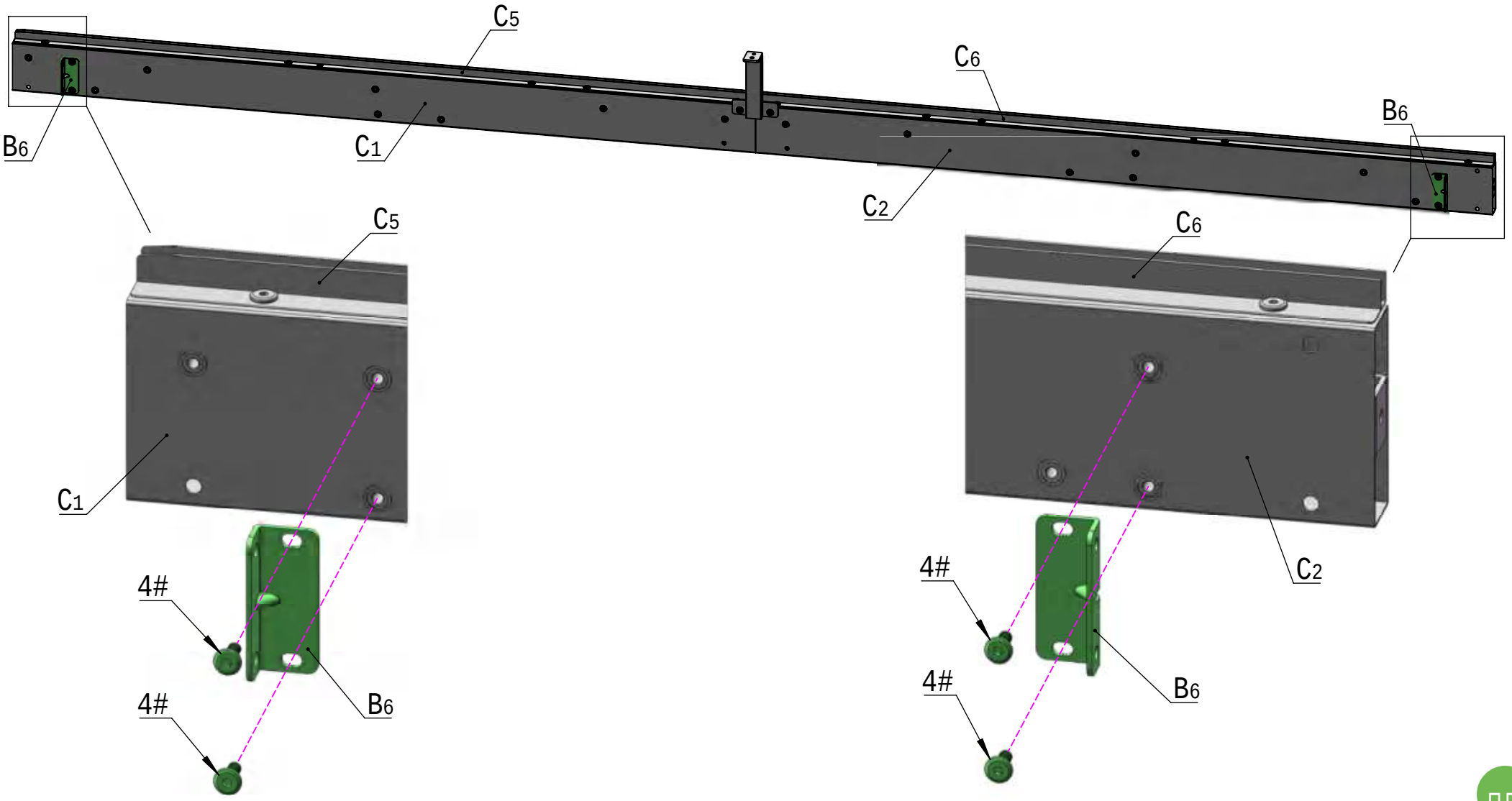

Side Beam Assembly

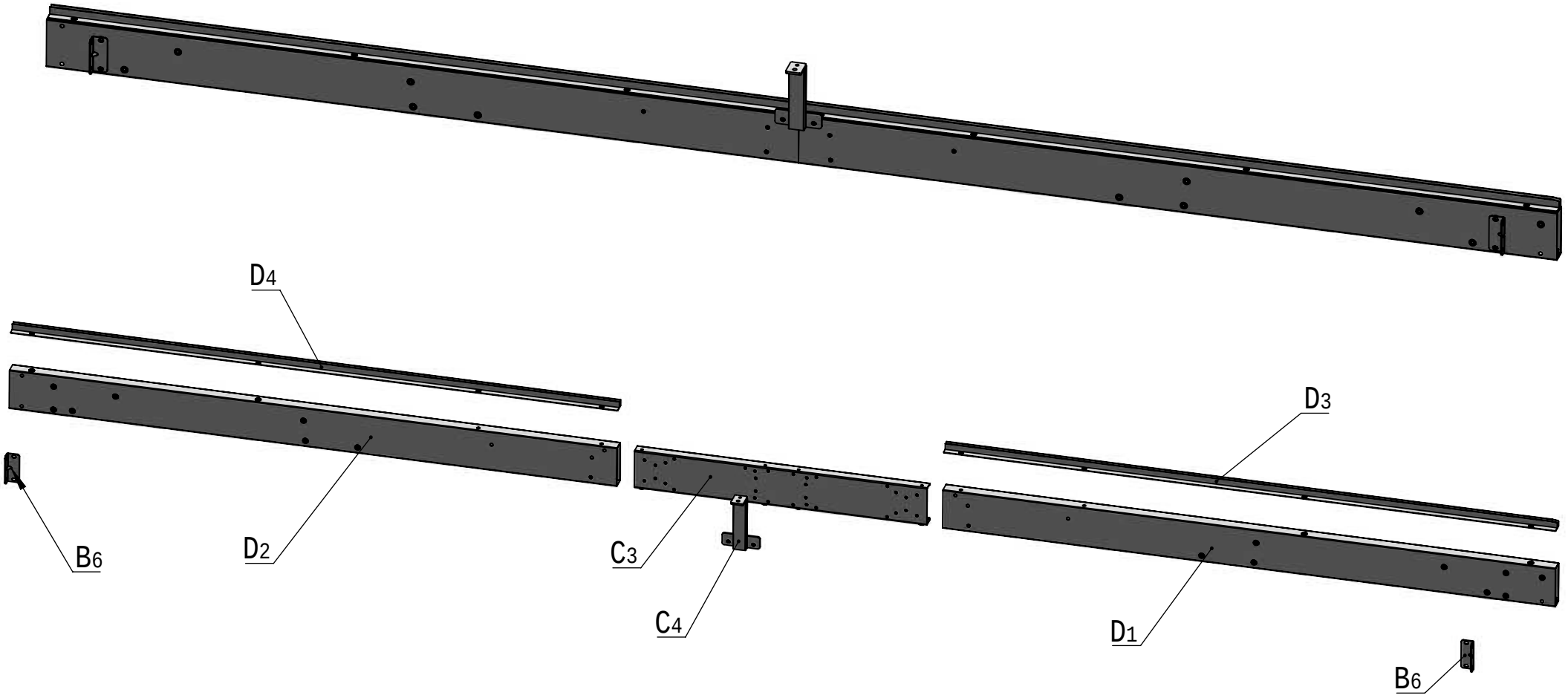

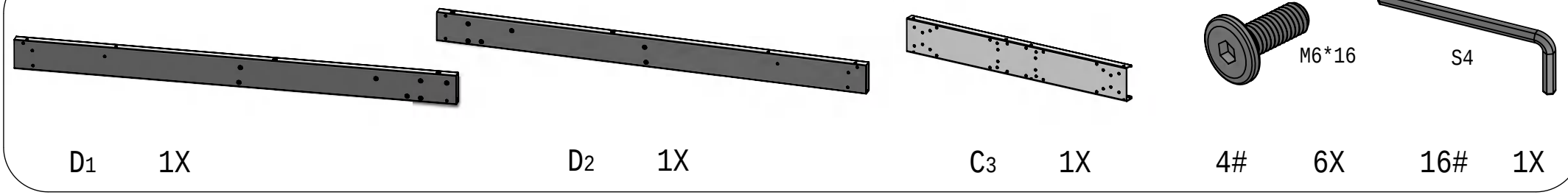

D1 1X D2 1X C3 1X 4# 6X 16# 1X

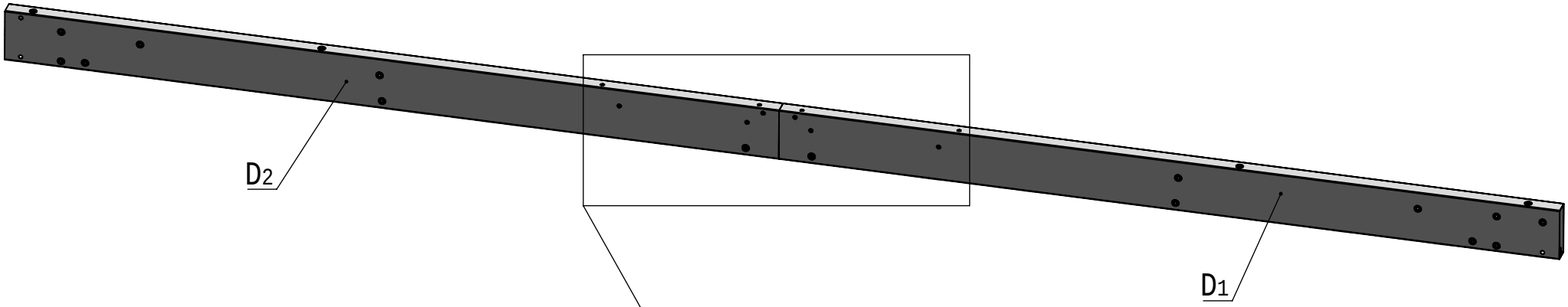

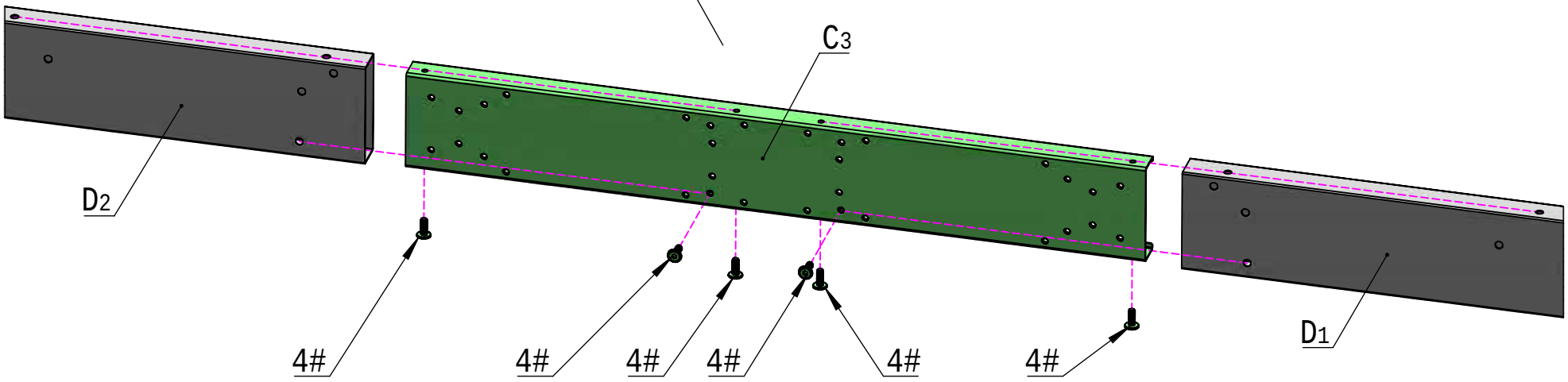

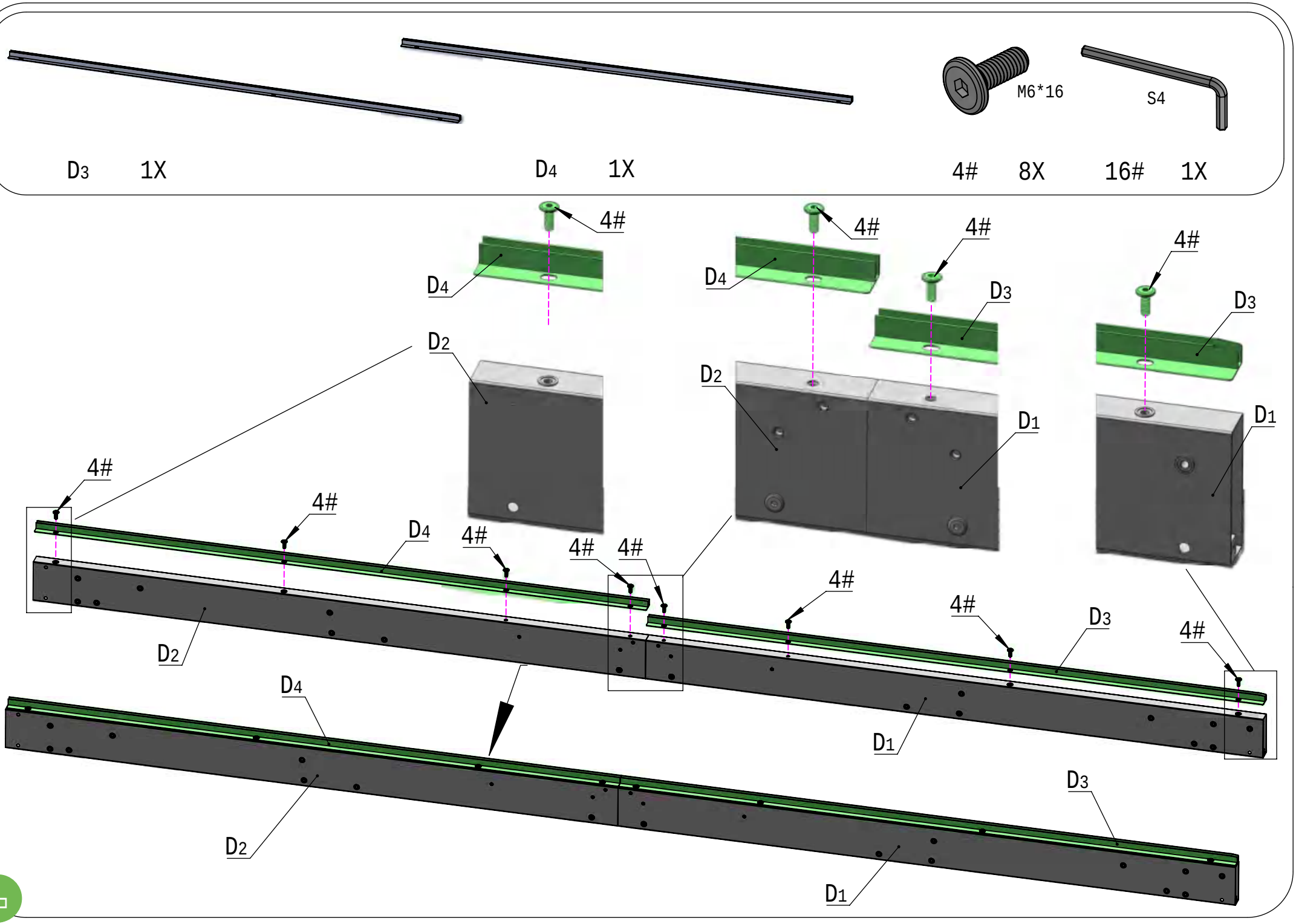
M6*16
S4
D3 1X
D4 1X
4# 8X
16# 1X
4#
D4
D2
D1
D3

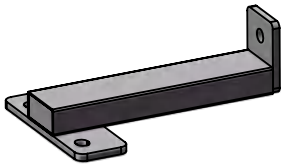

C4 1X

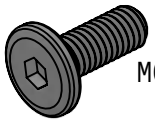

4# 2X

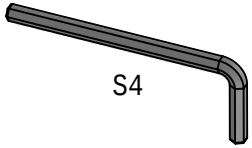

16# 1X

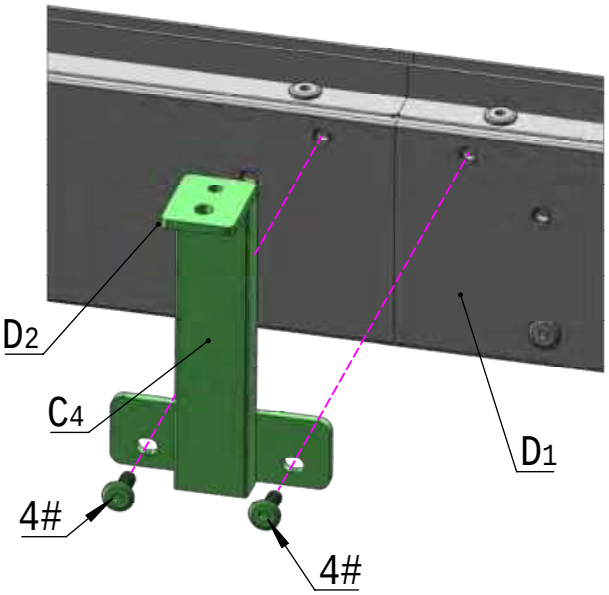

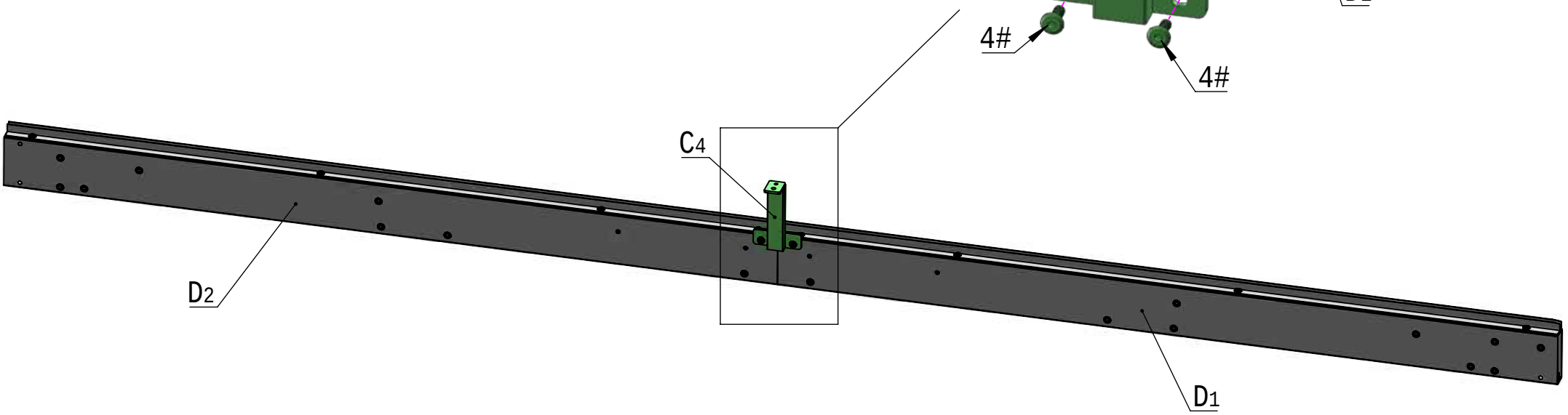

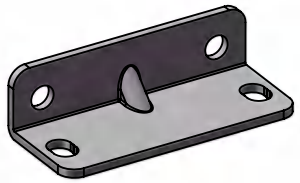

B6 2X

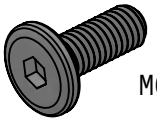

4# 4X

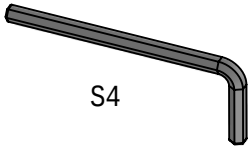

16# 1X

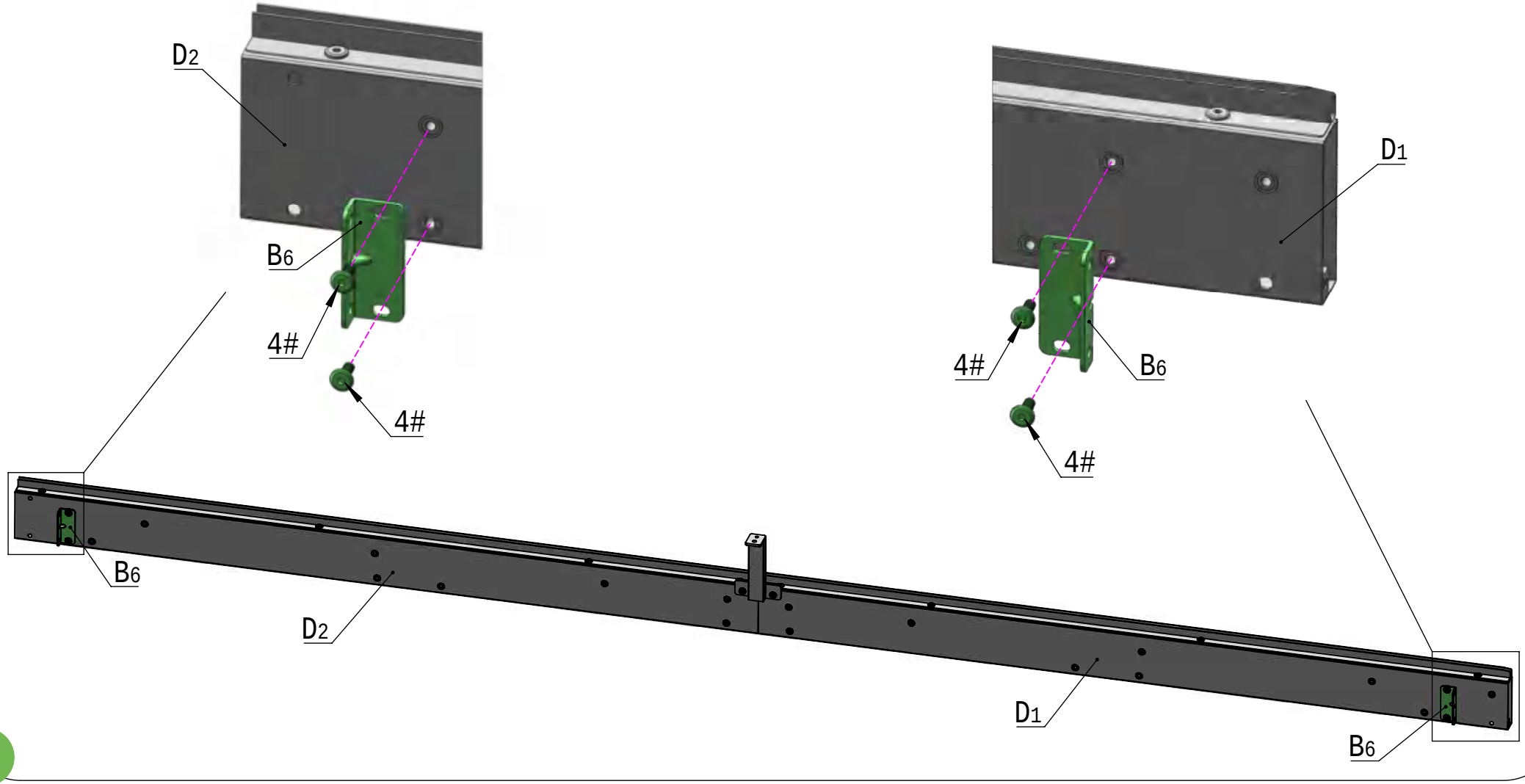

Rear Beam Assembly

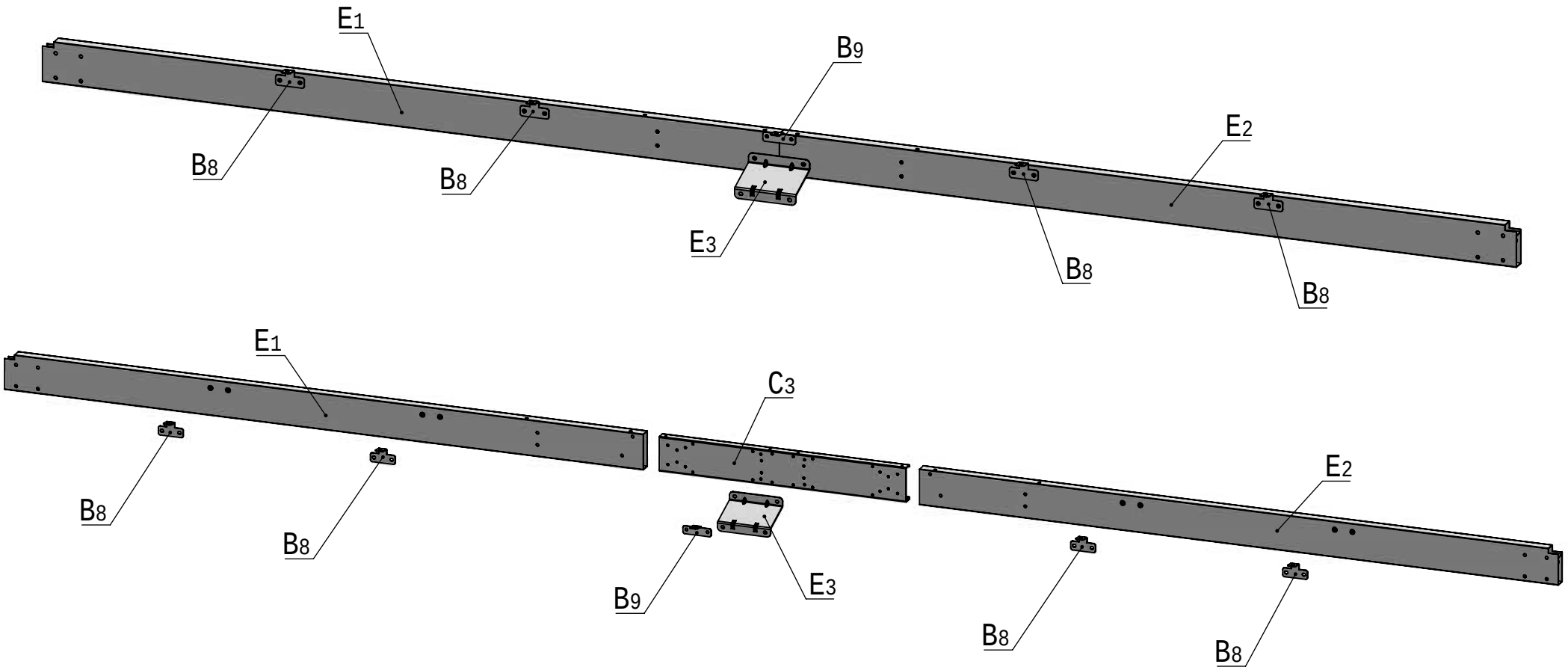

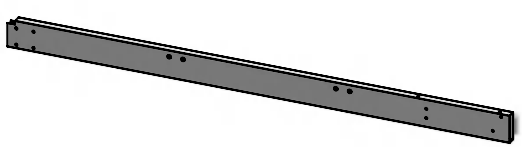

E1 1X

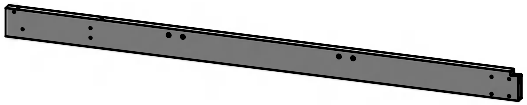

E2 1X

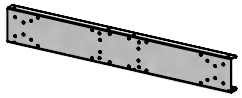

C3 1X

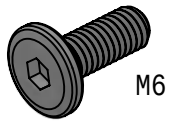

4# 12X

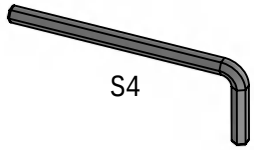

16# 1X

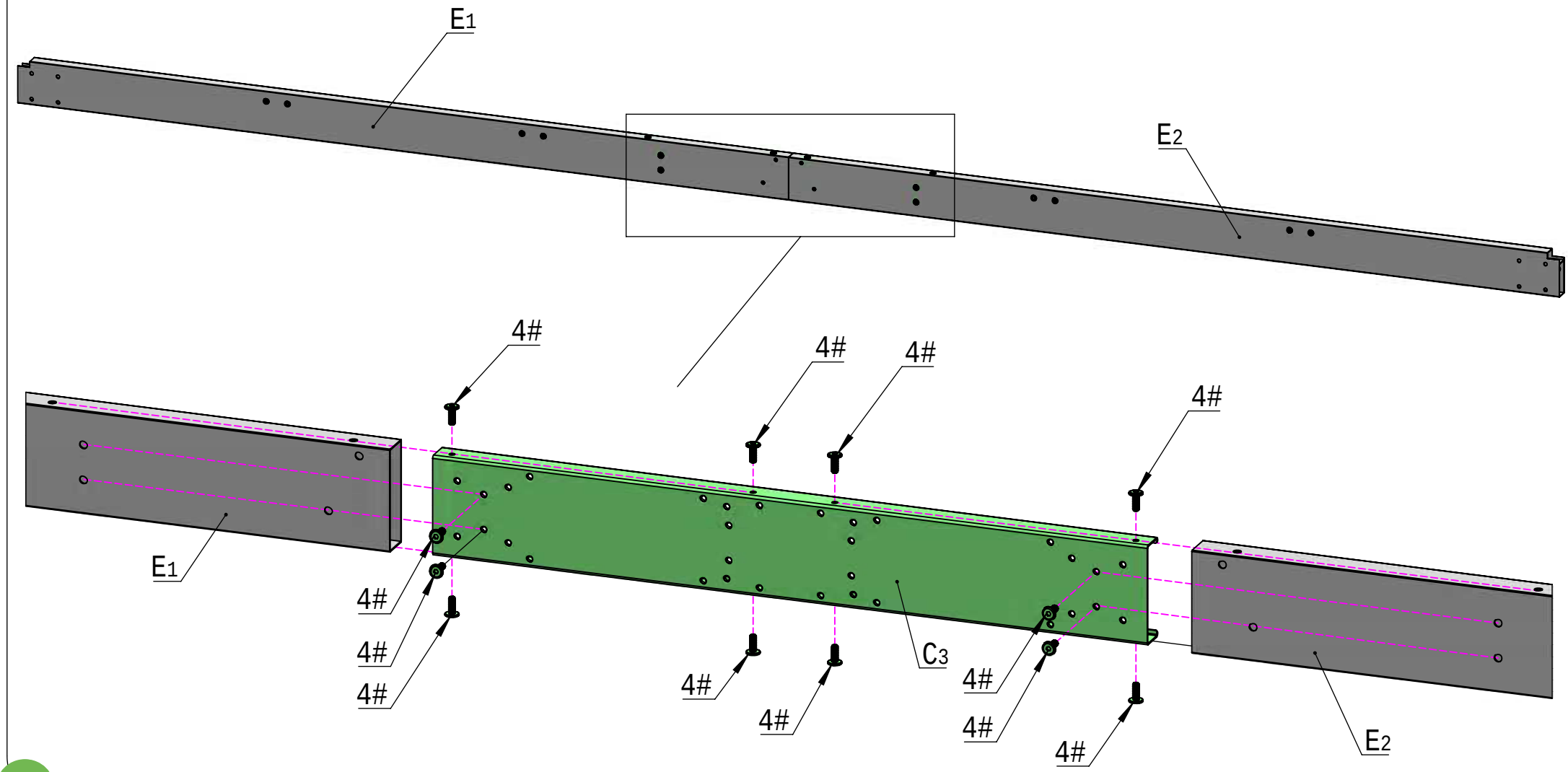

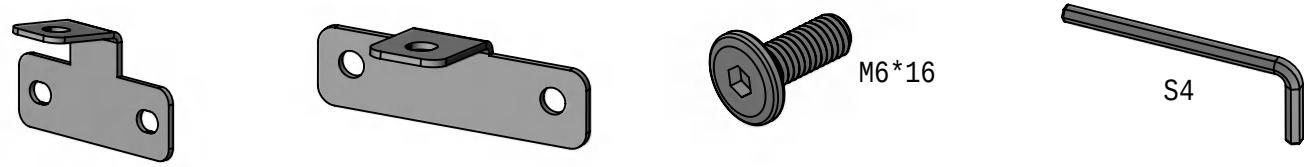

B8 4X B9 1X 4# 10X 16# 1X

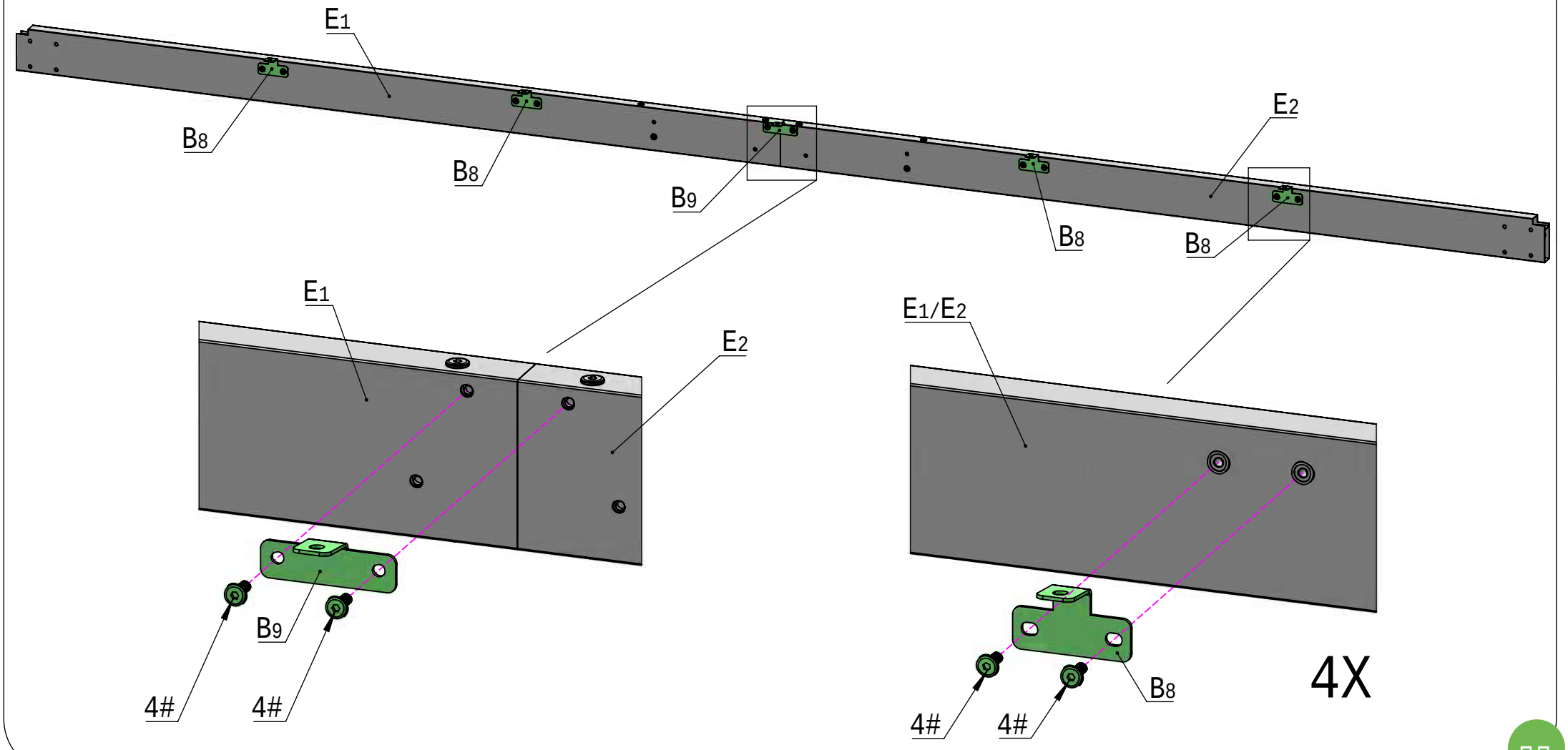

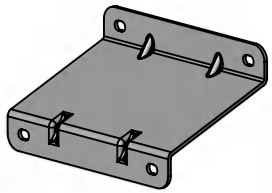

E3 1X

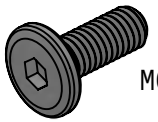

4# 2X

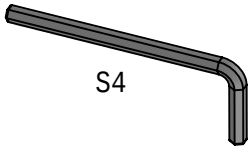

16# 1X

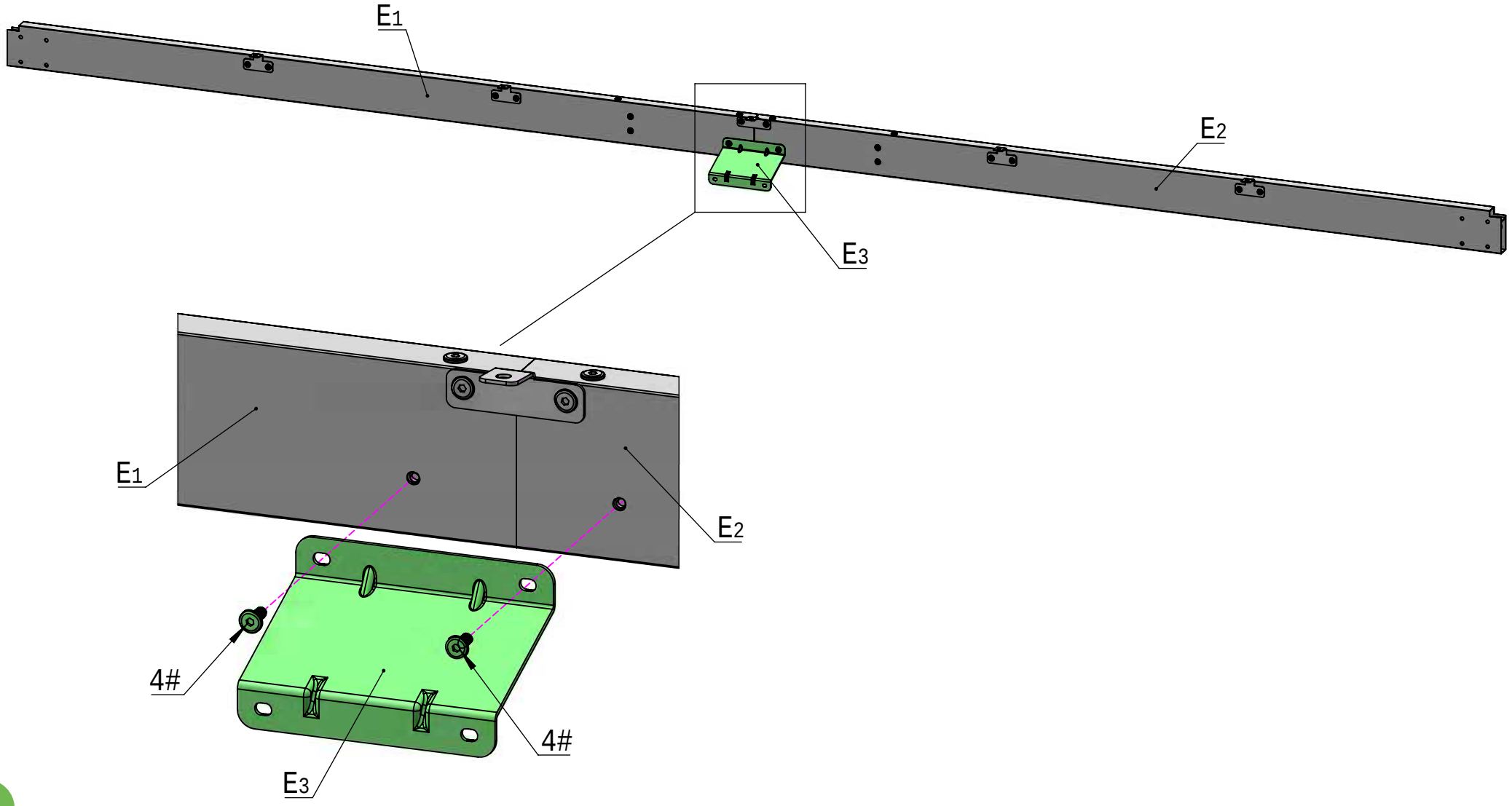

Frame Assembly

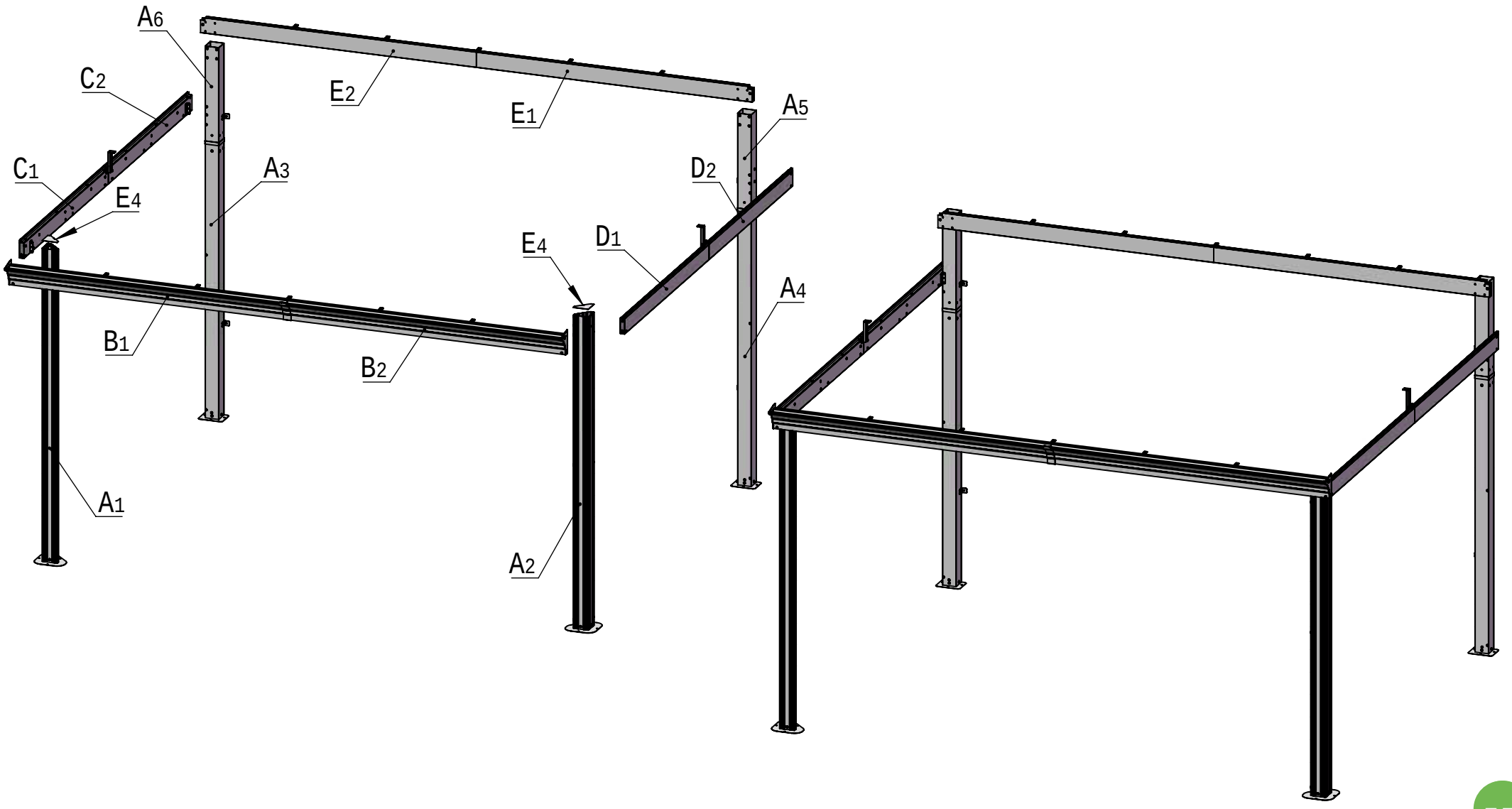



4# 6X

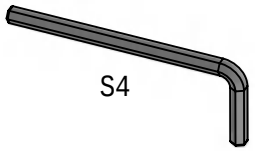

16# 1X

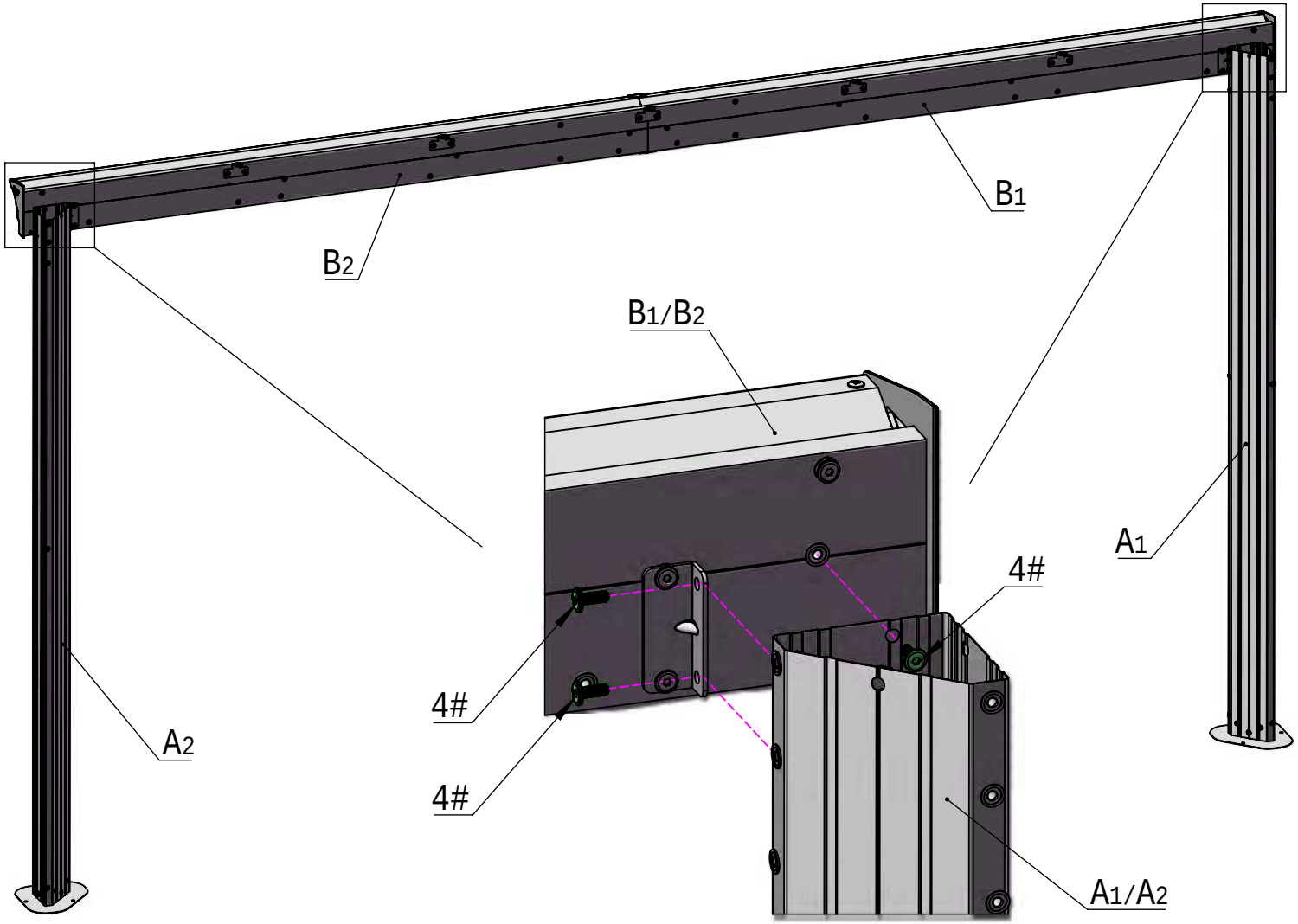

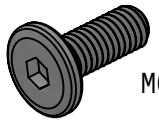

M6*16

4# 10X

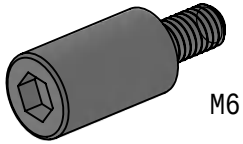

M6*12(L20)

7# 2X

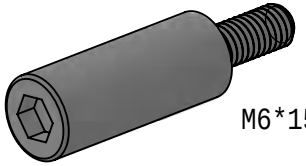

M6*15(L30)

8# 6X

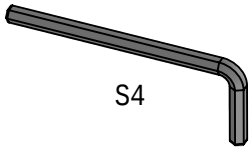

S4

16# 1X

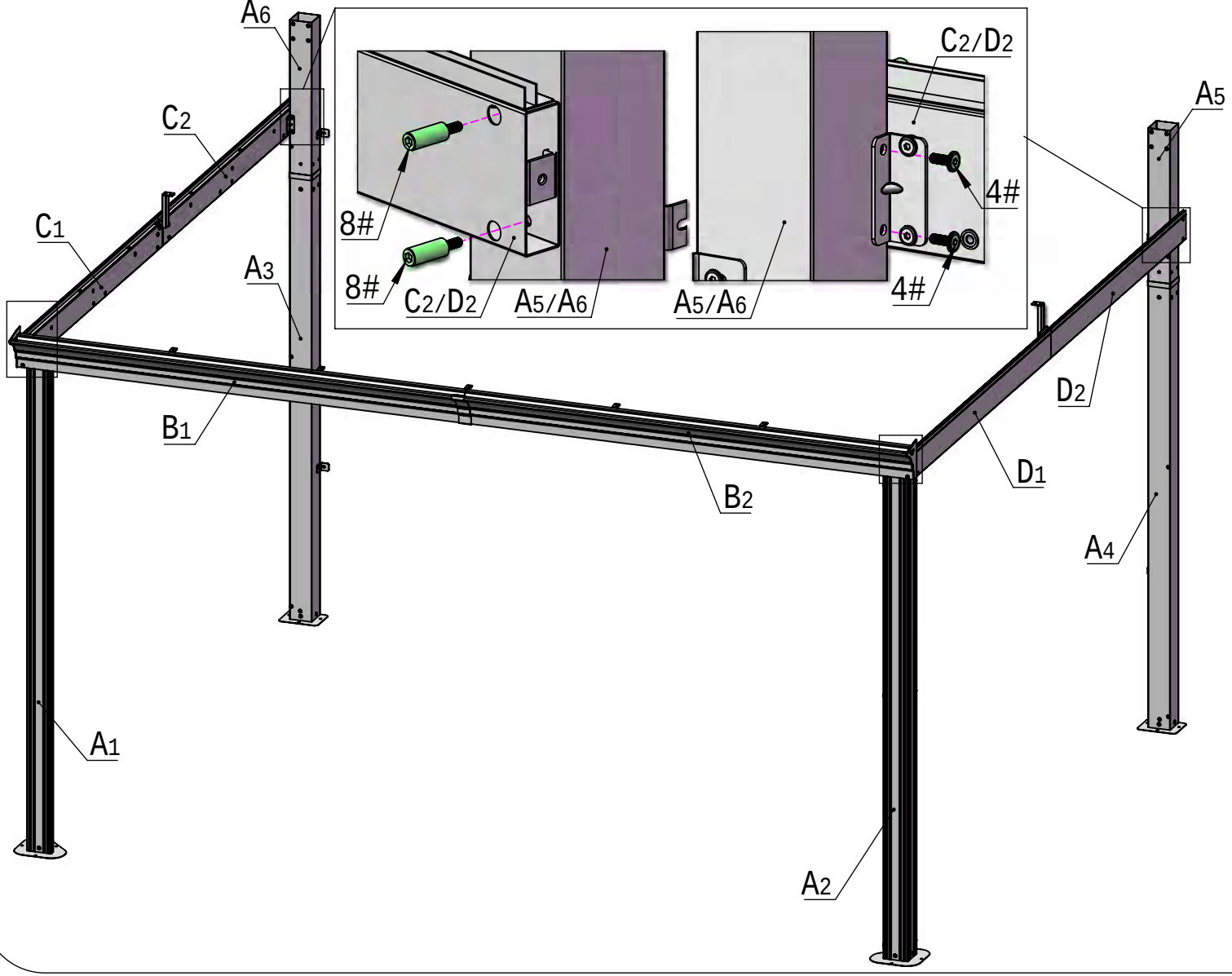

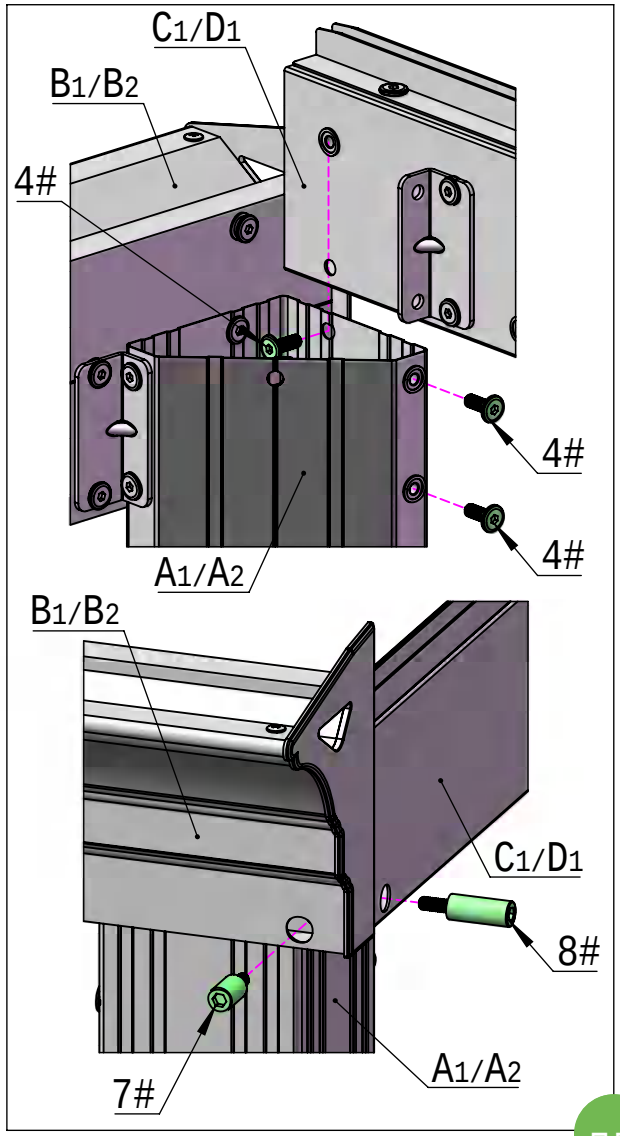

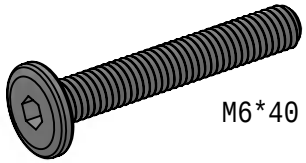

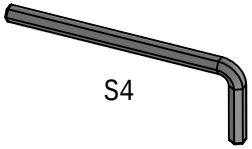

6# 8X 16# 1X

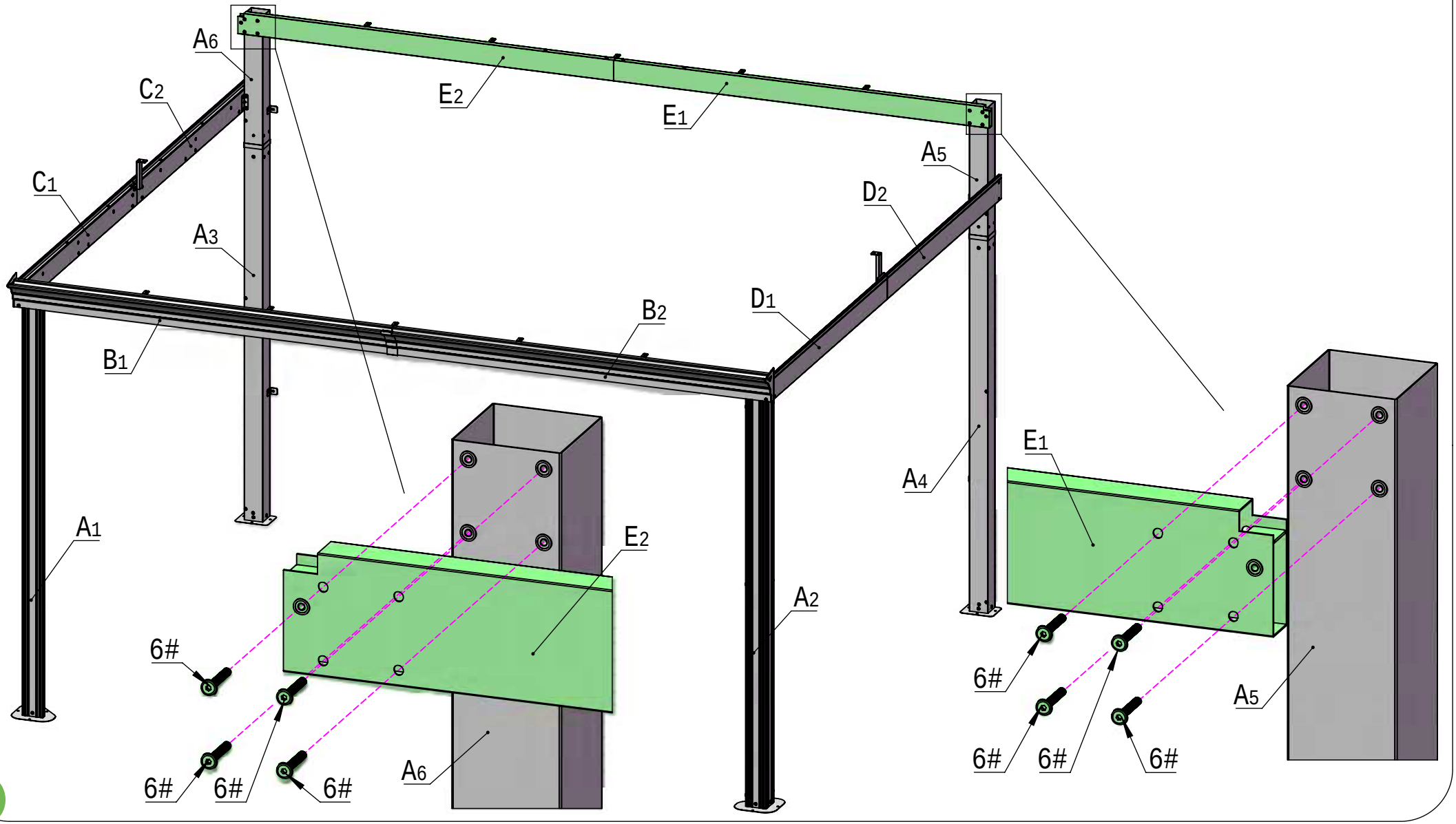

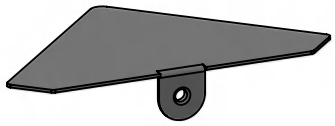

E4 2X

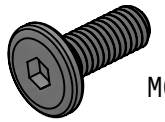

4# 2X

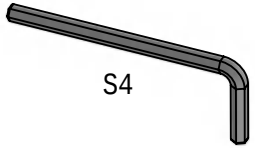

16# 1X

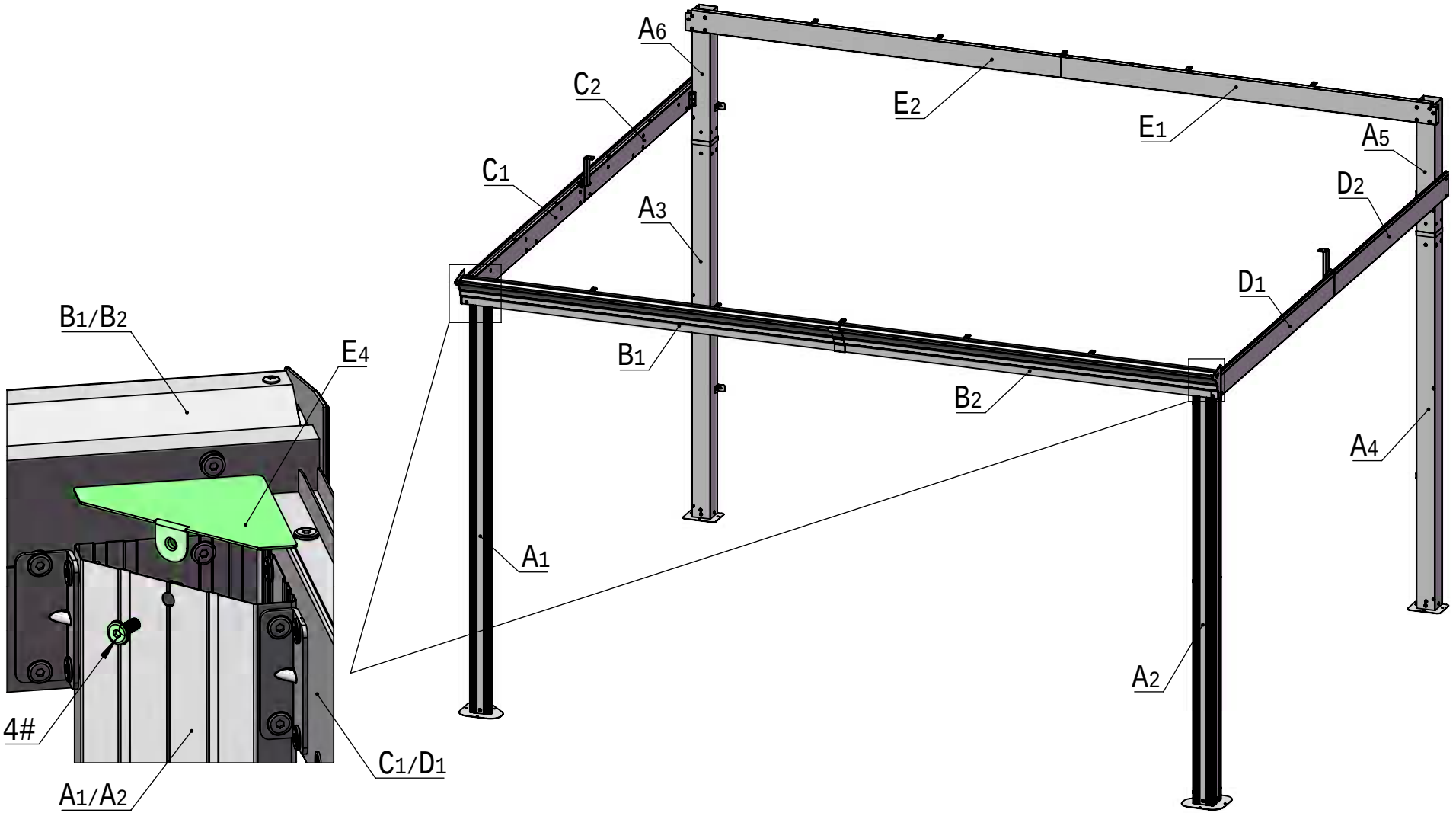

Middle Beam Assembly

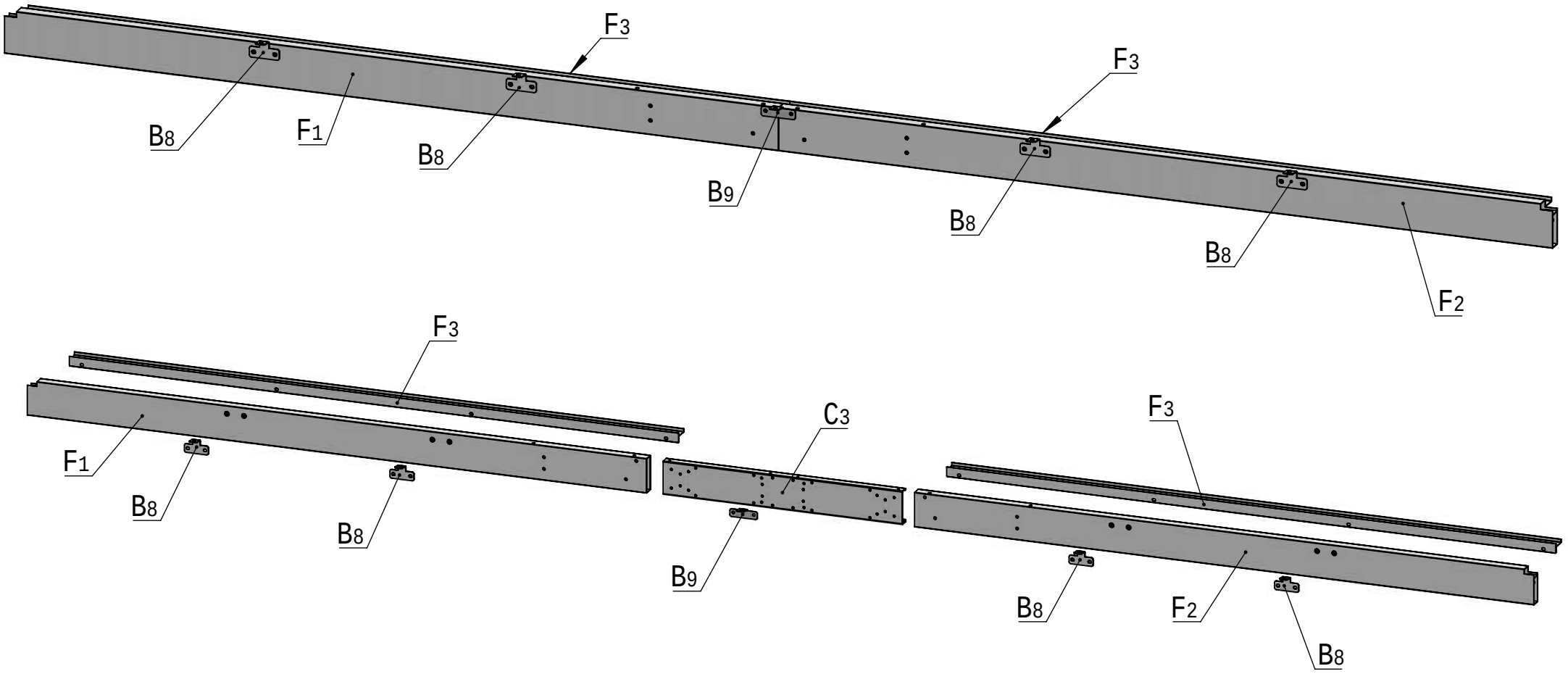

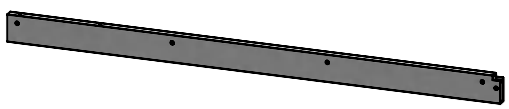

F1 1X

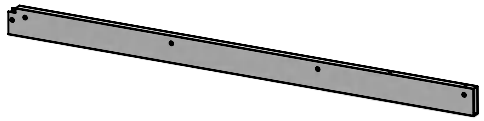

F2 1X

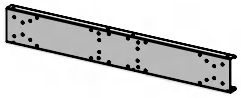

C3 1X

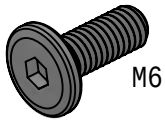

4# 14X

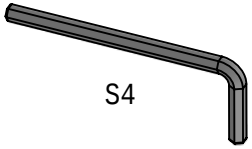

16# 1X

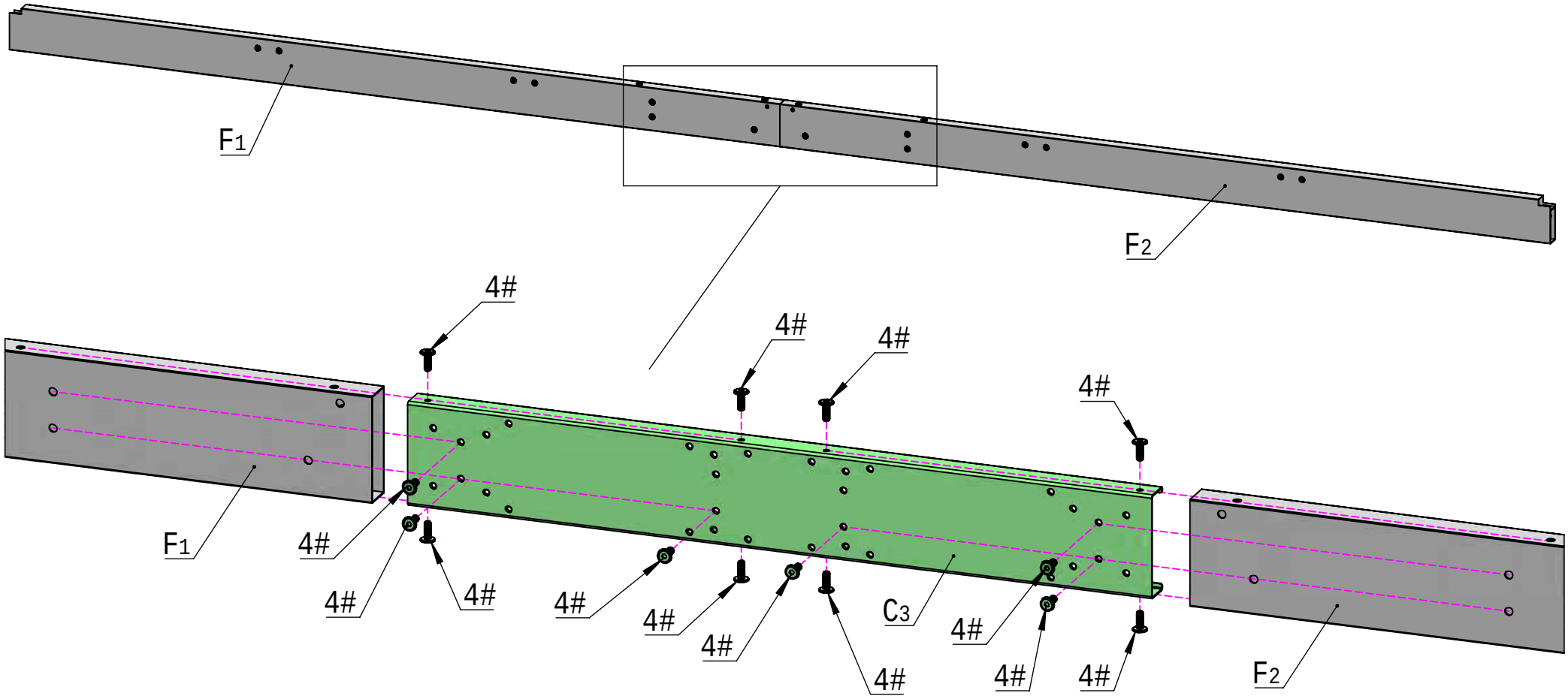

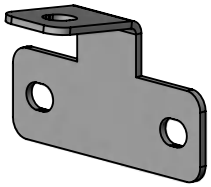

B8 4X

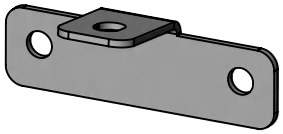

B9 1X

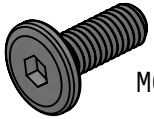

4# 10X

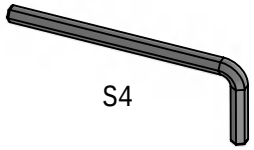

16# 1X

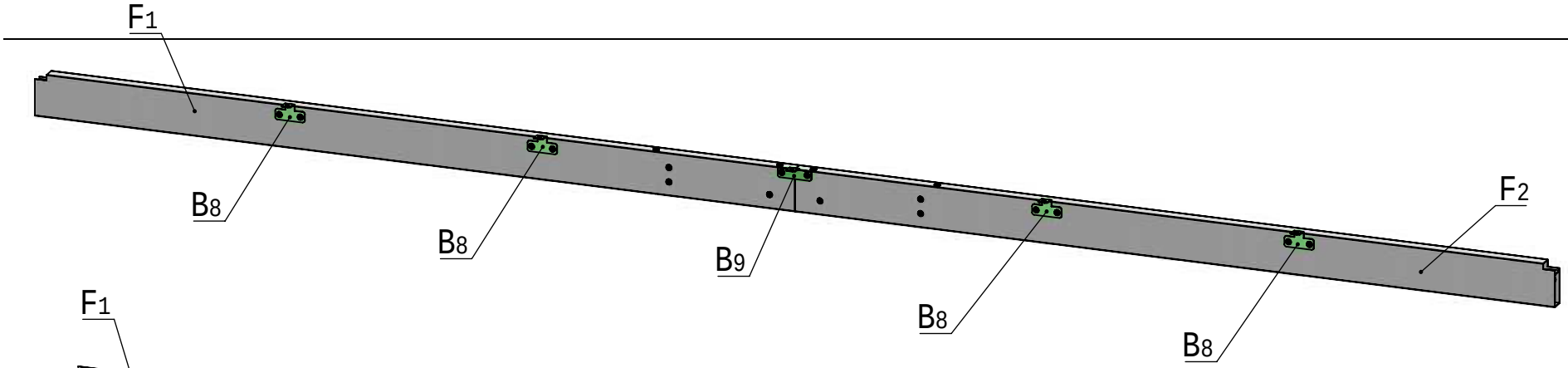

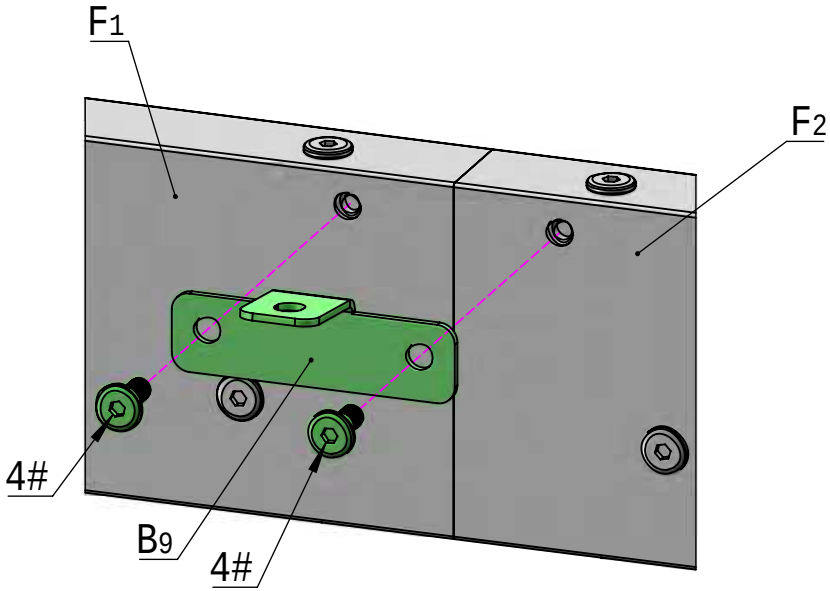

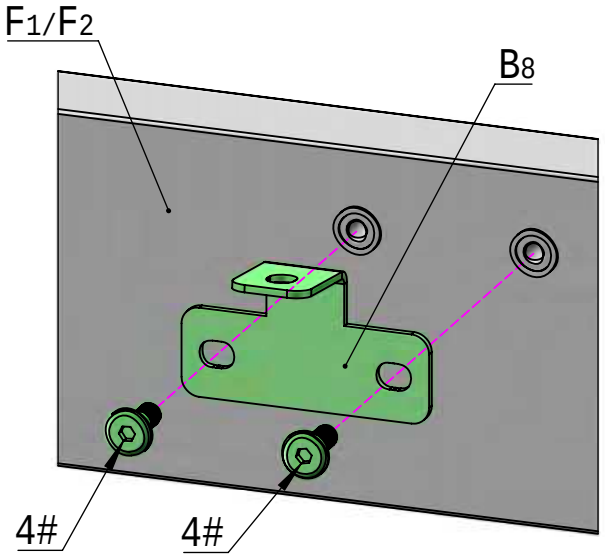

4X

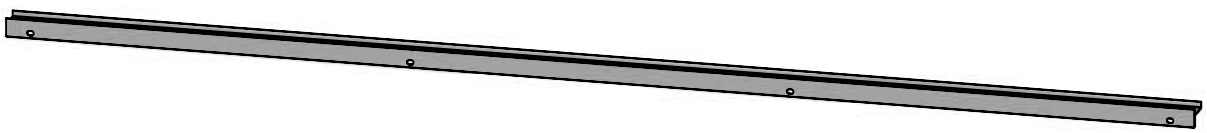

F3 2X

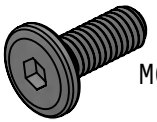

4# 8X

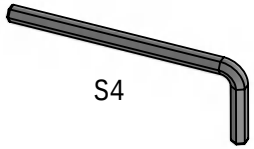

16# 1X

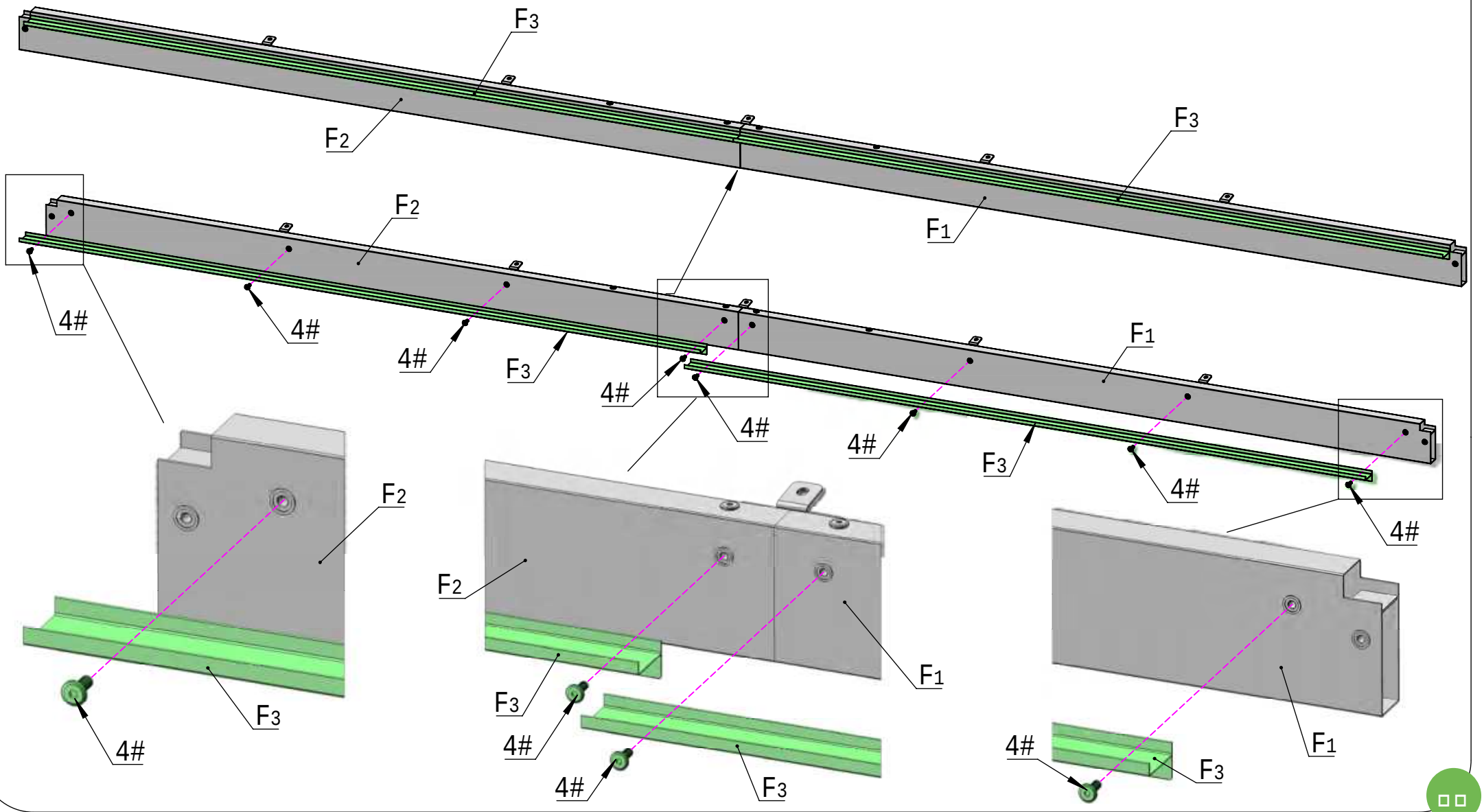

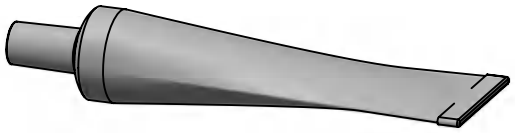

15# 1X

Use silicone sealant (part #15) to affix the gap between the two beams.

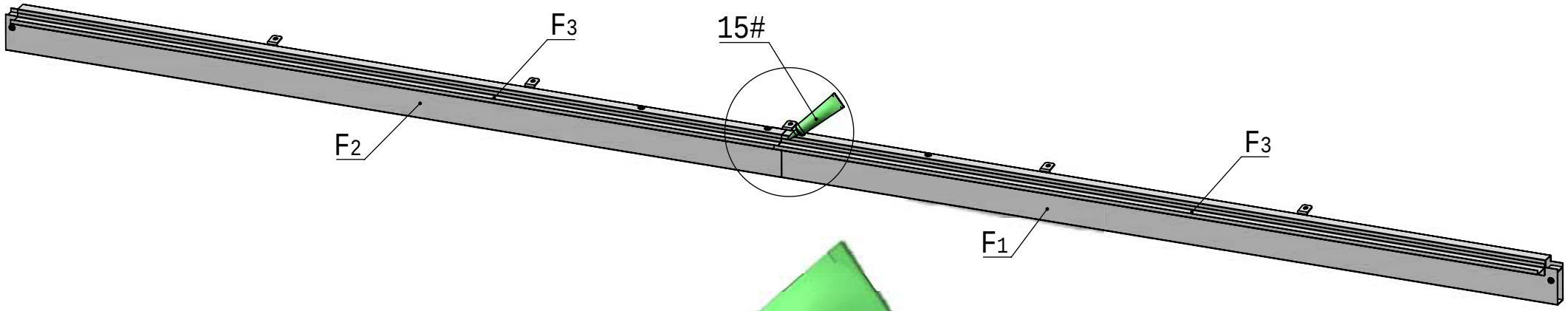

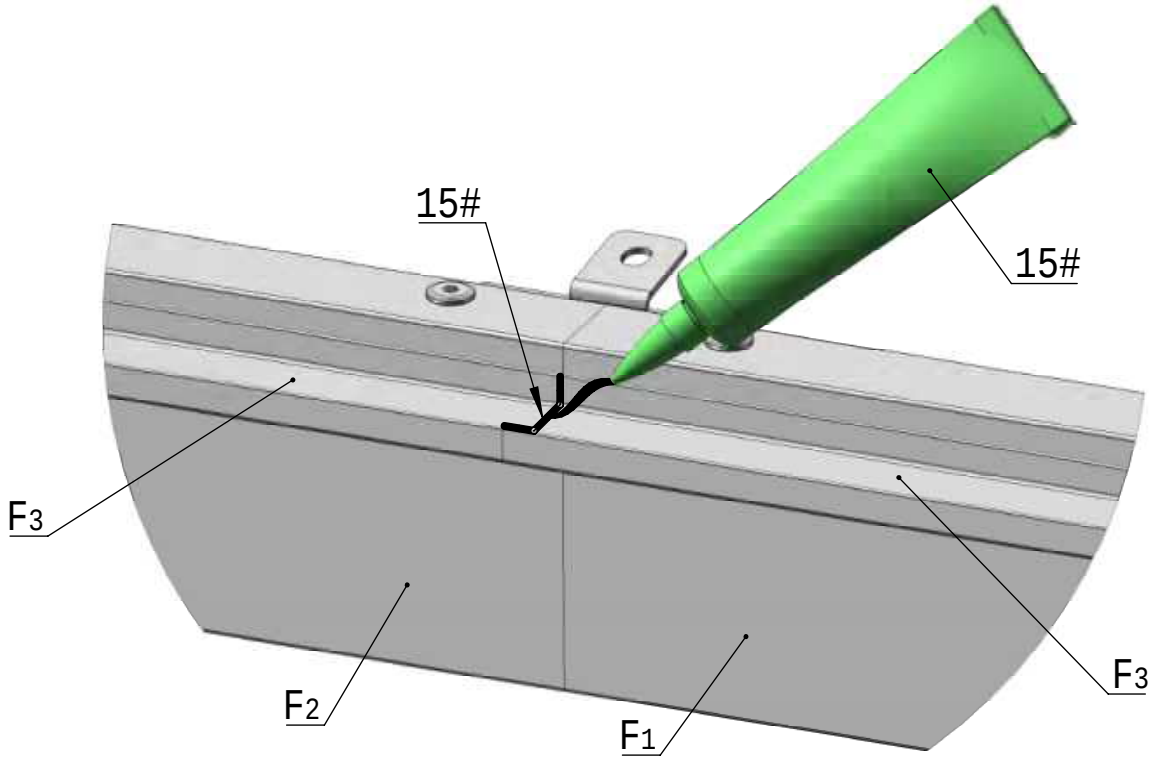


M6*16

4# 2X

S4

16# 1X

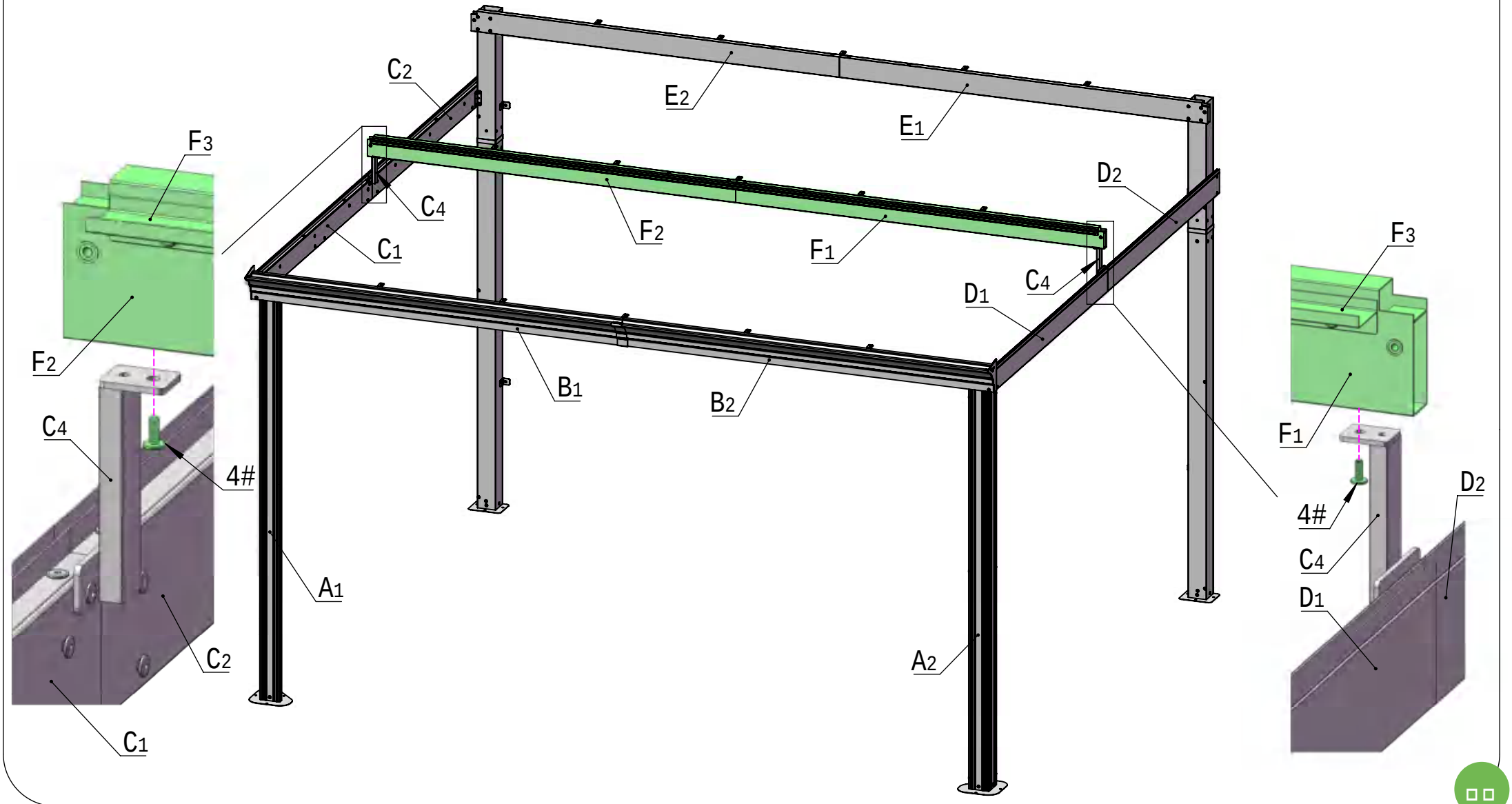
C2
E2
E1
F3
D2
C4
F2
F1
C1
C4
D1
F3
F2
B1
B2
C4
4#
F1
D2
4#
C4
A1
D1
C2
A2
C1

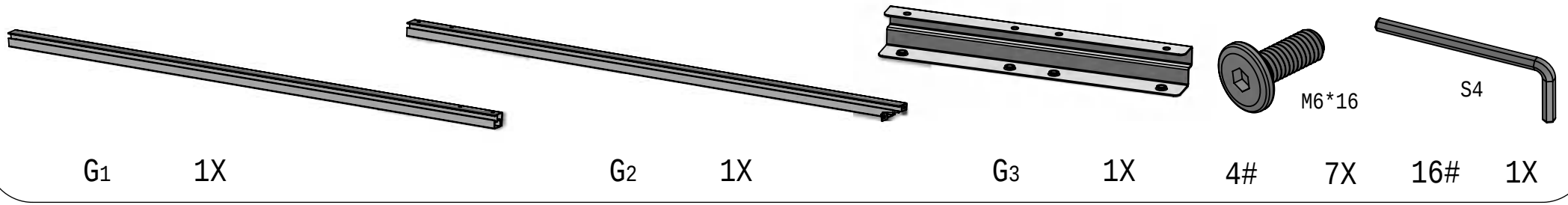

G1	1X	G2	1X	G3	1X	4#	7X	16#	1X

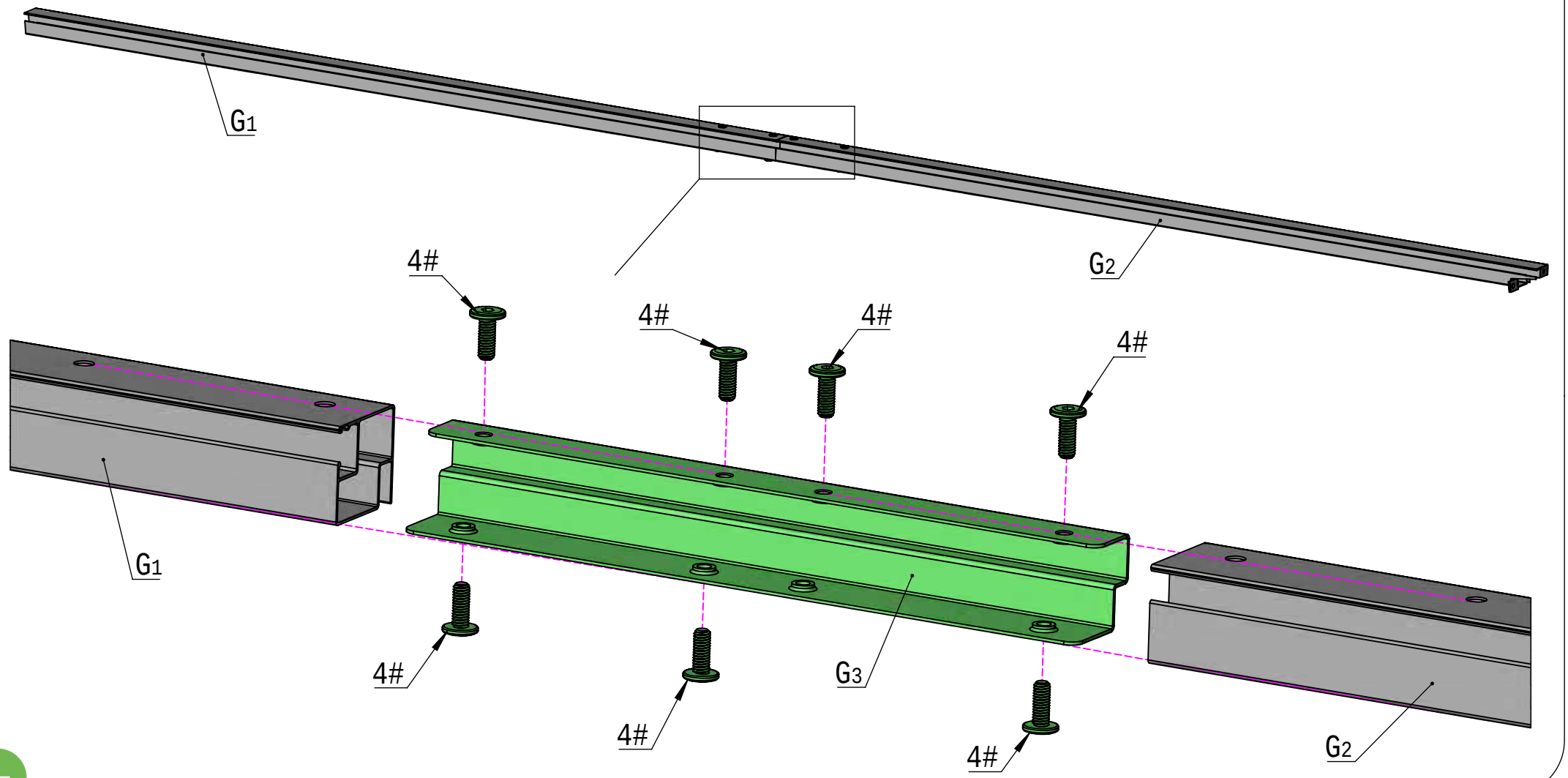



15# 1X



11# 1X

Apply a strip of waterproof tape (part # 11) on the gap between G1 and G2. Then, fill the gap in the groove with silicone sealant (part # 15).

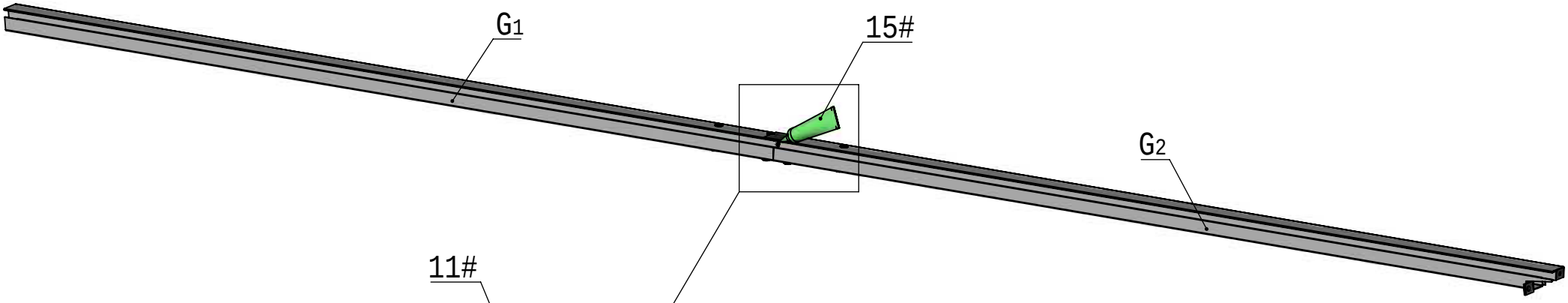

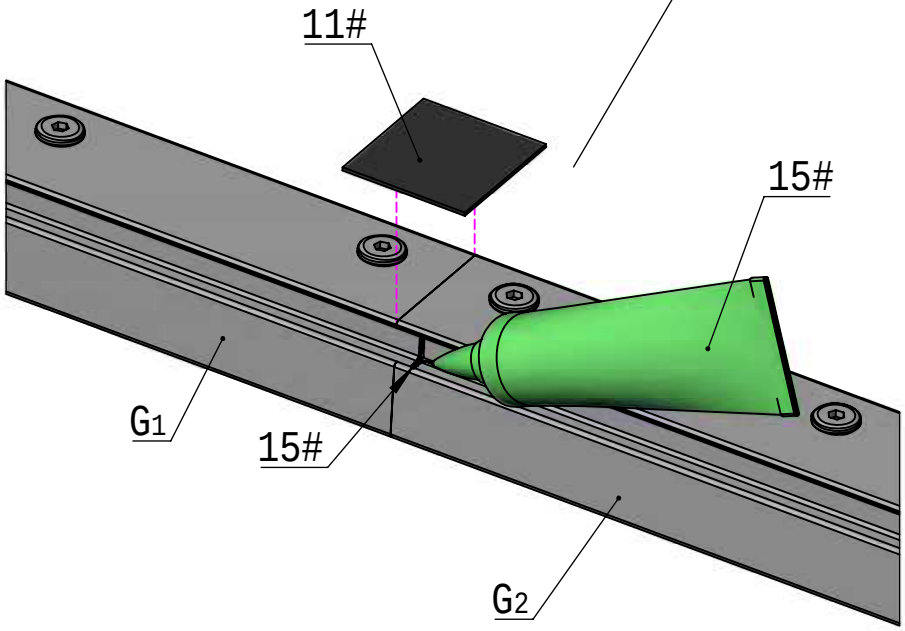

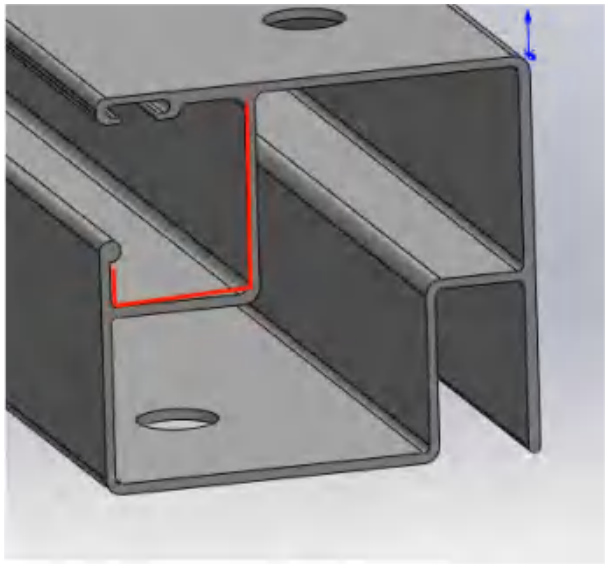

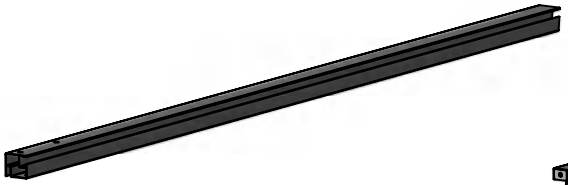

G4 1X

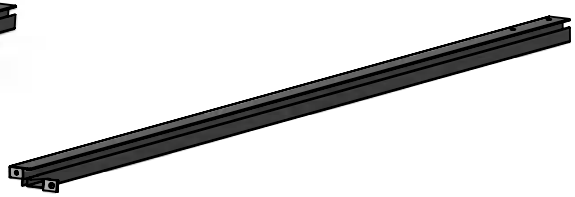

G5 1X

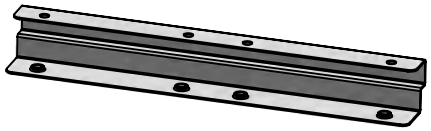

G3 1X

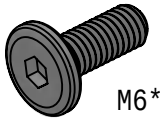

4# 7X

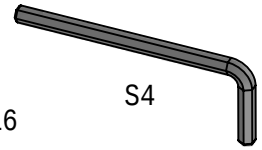

16# 1X

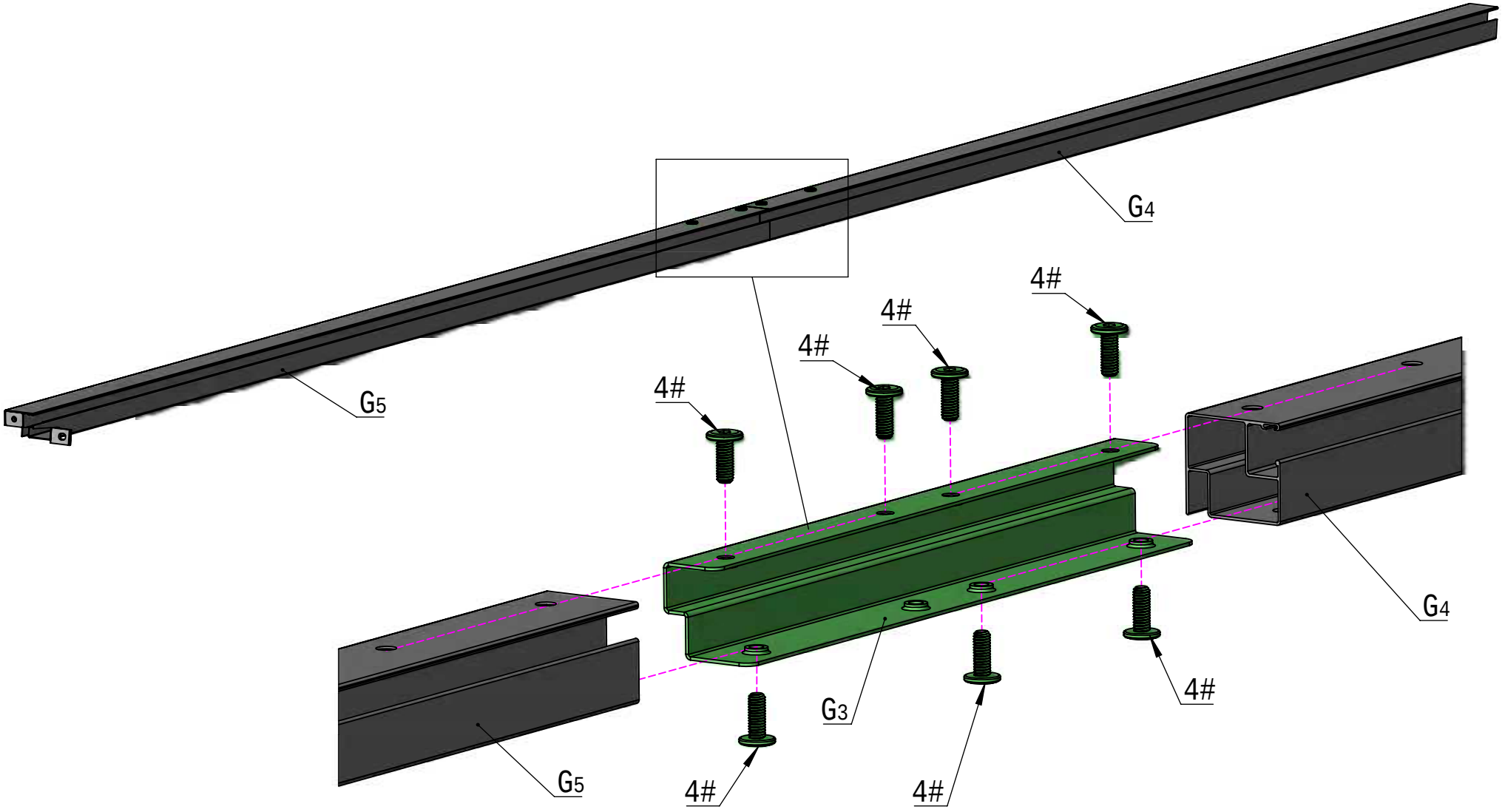



15# 1X



11# 1X

Apply a strip of waterproof tape (part # 11) on the gap between G4 and G5. Then, fill the gap in the groove with silicone sealant (part # 15).

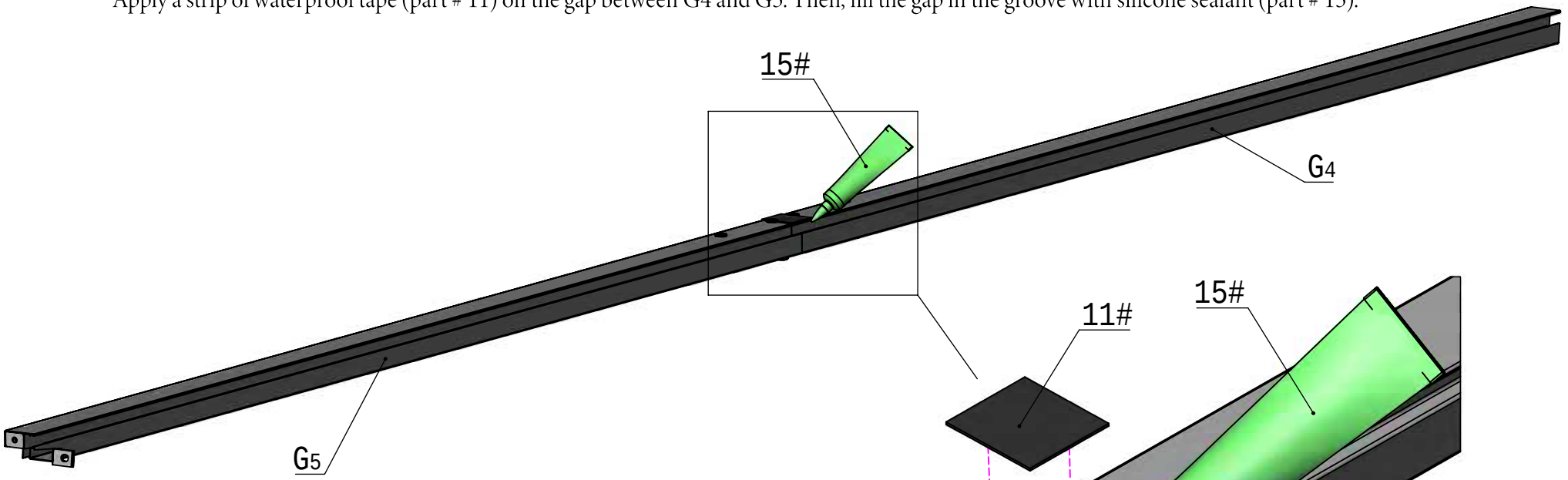

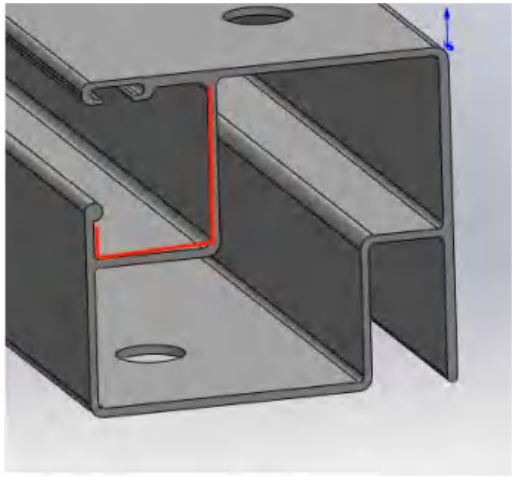

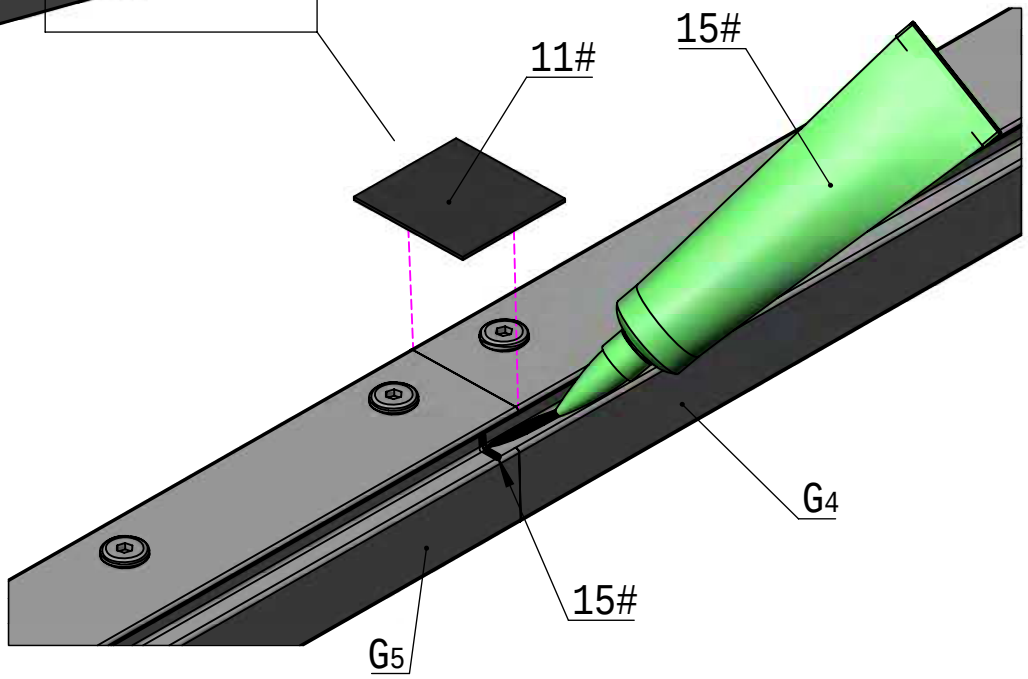

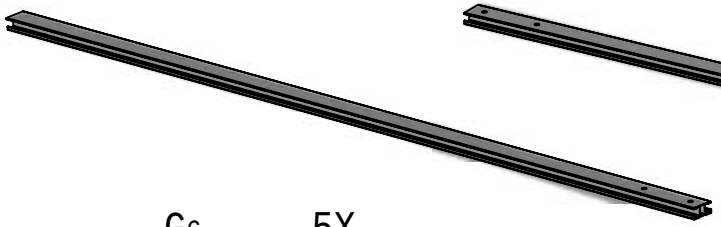

G6 5X

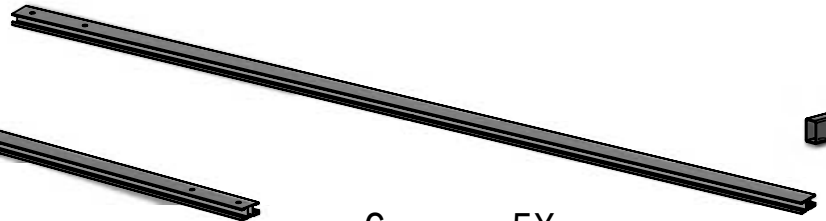

G7 5X

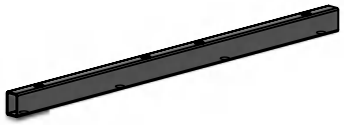

G8 5X

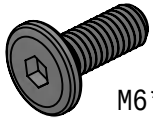

4# 35X

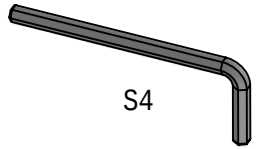

16# 1X

5X

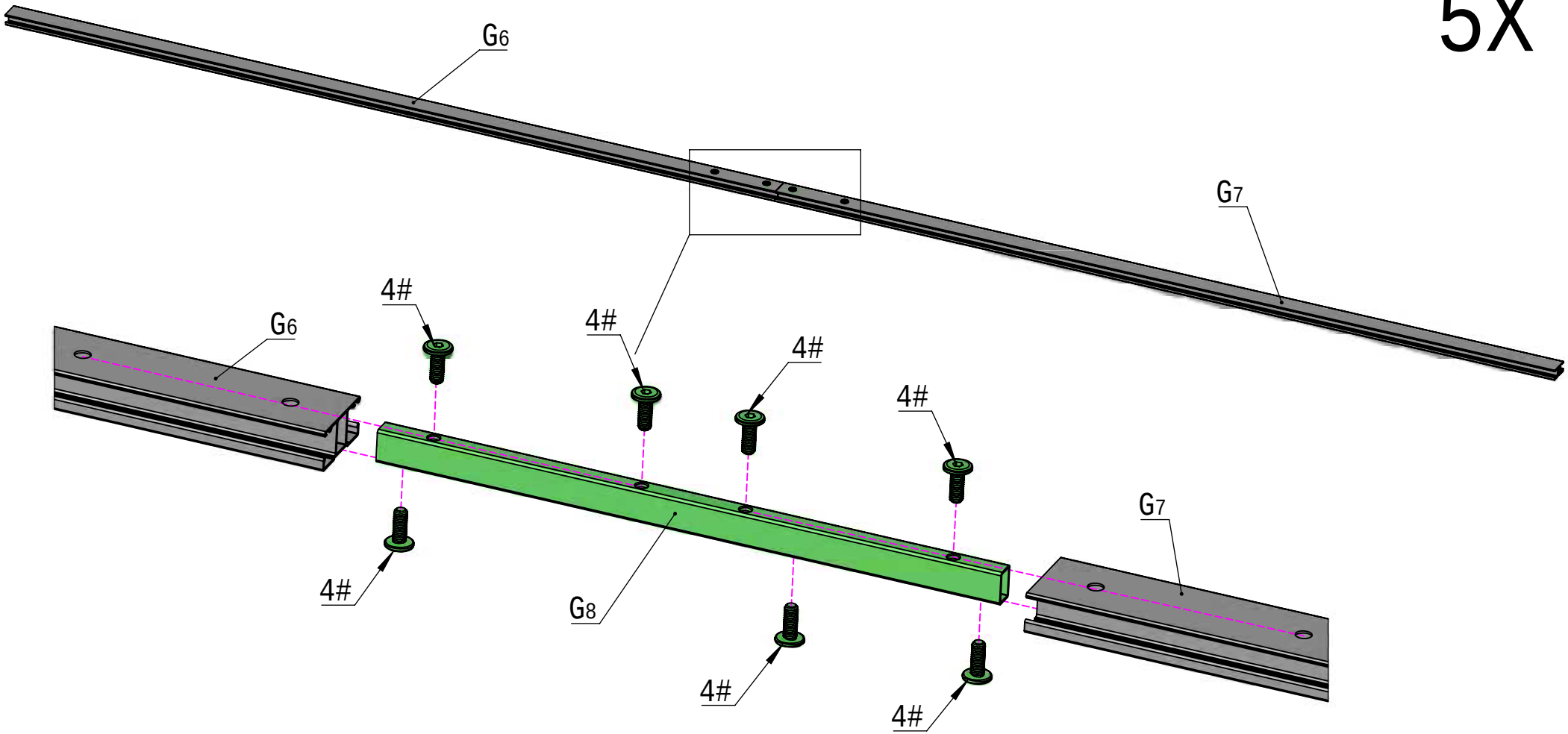



15# 1X



11# 1X

5X

Apply a strip of waterproof tape (part # 11) on the gap between G6 and G7.
Then, use silicone sealant (part # 15) to fill the gap in the groove on both sides.

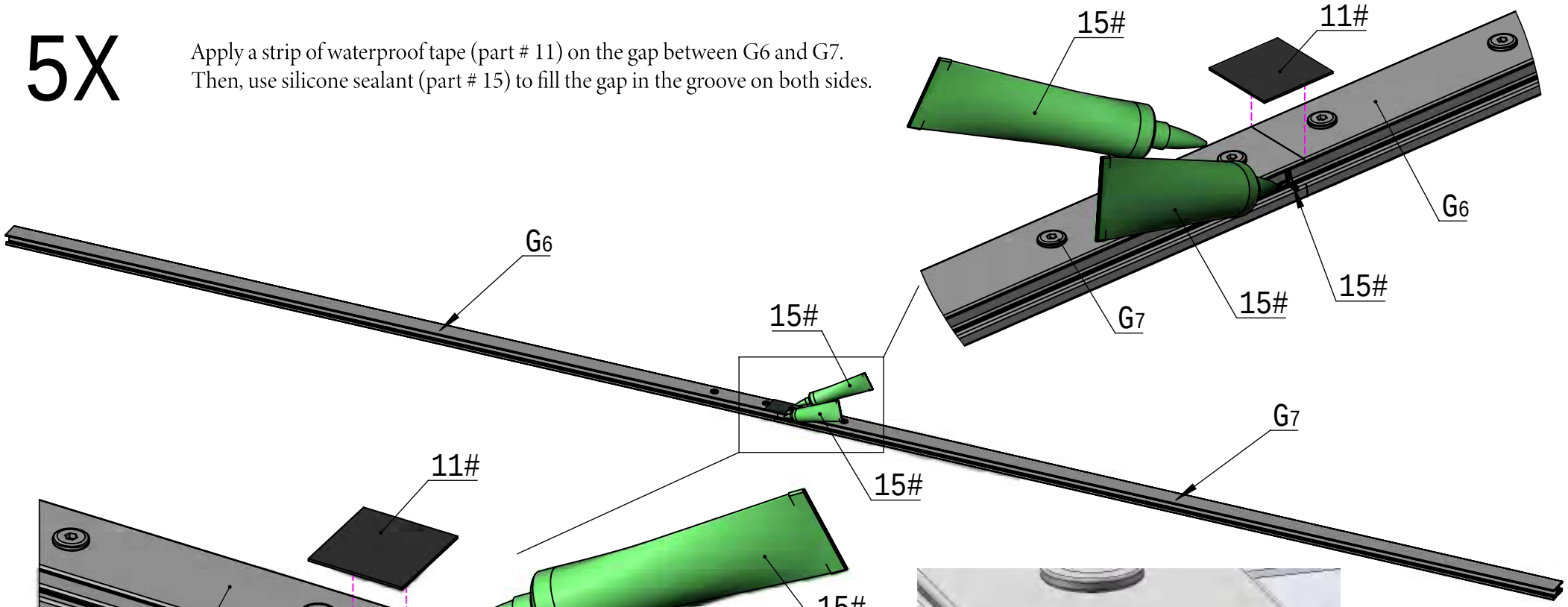

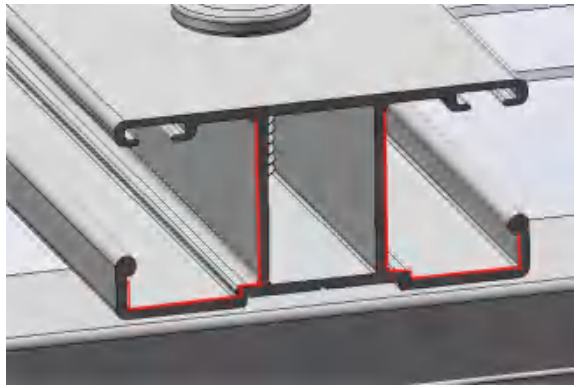

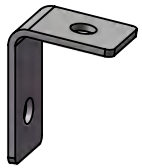

G9 4X

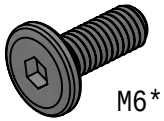

4# 10X

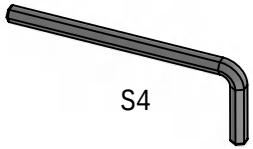

16# 1X

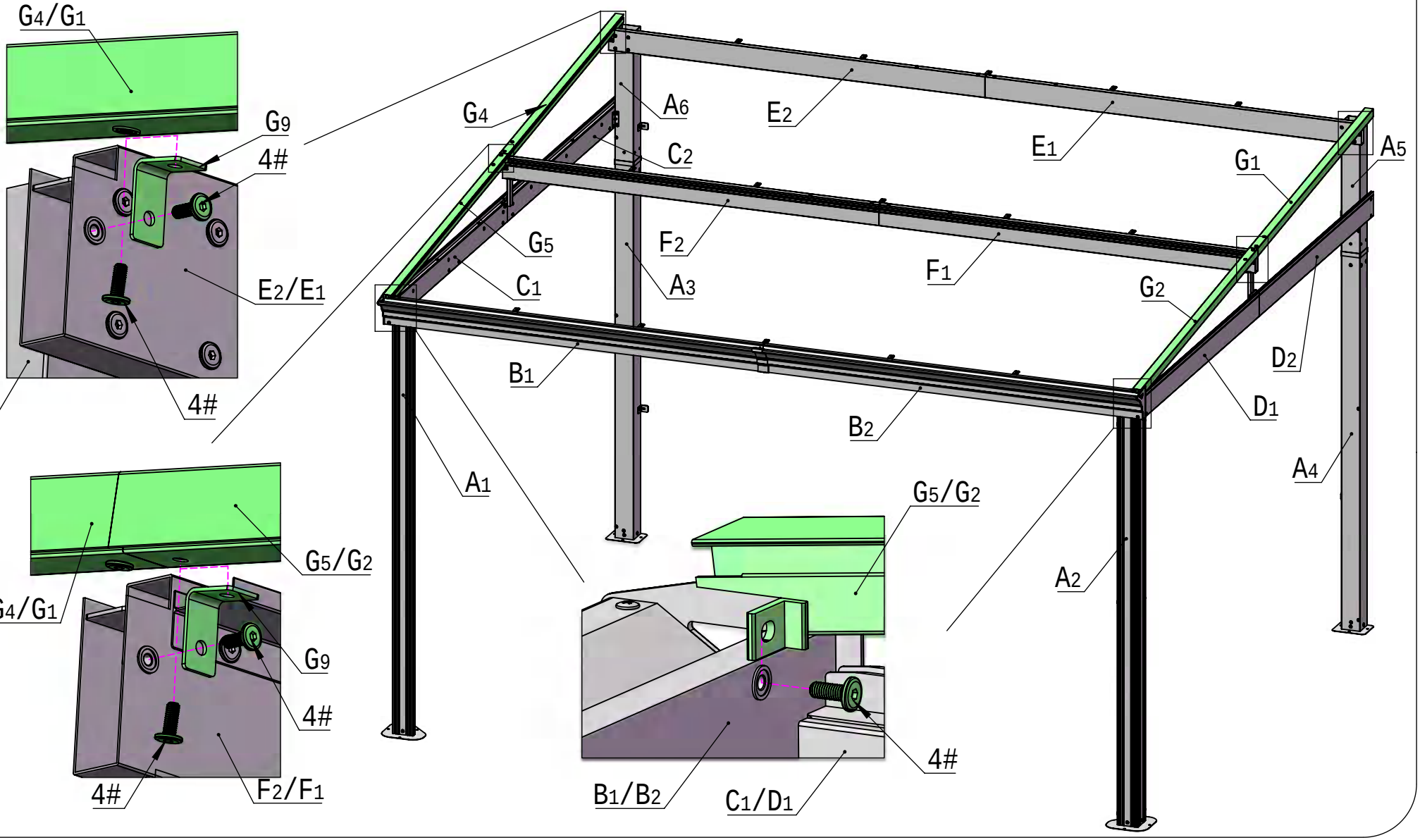

IMPORTANT! POLYCARBONATE INFORMATION

- Each polycarbonate panel has a UV coating on only ONE (1) side of the panel.
- To install properly so the UV coating is on the outside of the panel.

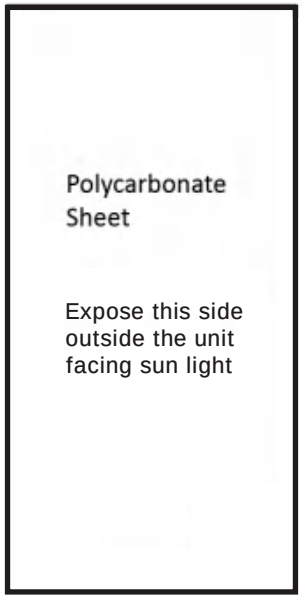

- Remove film immediately before installing tape to prevent damage to the panels.

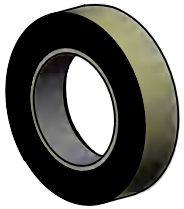

28# 1X

Note: Before installing the side panel, make sure to remove the protective film. Then centre the tape (#28) on the polycarbonate panel soit is equal on both sides. Fold the tape around the edges and rub gently to avoid damaging the tape.

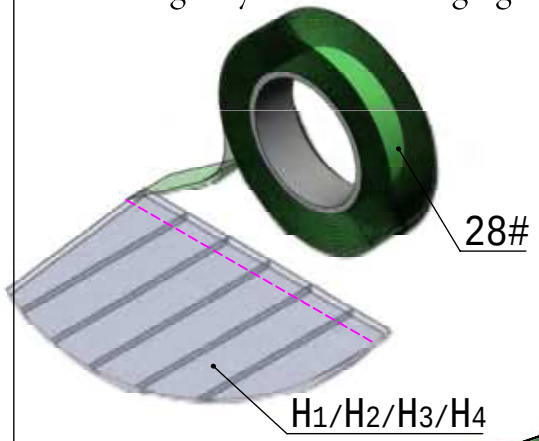

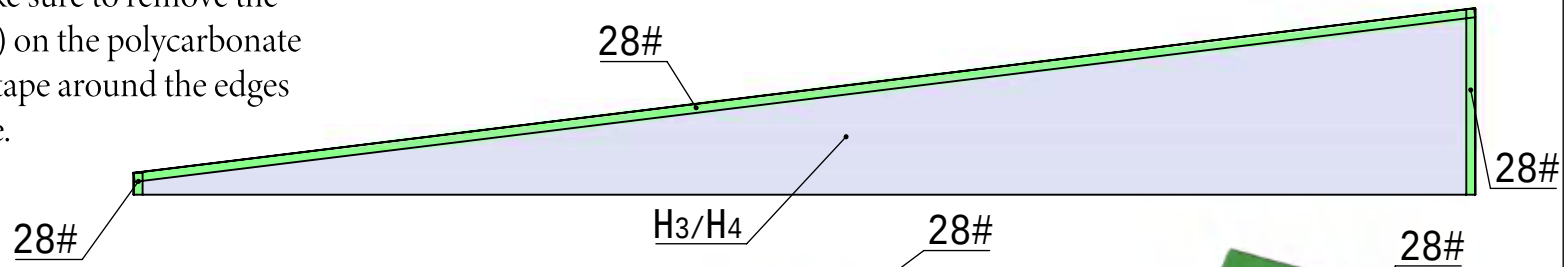

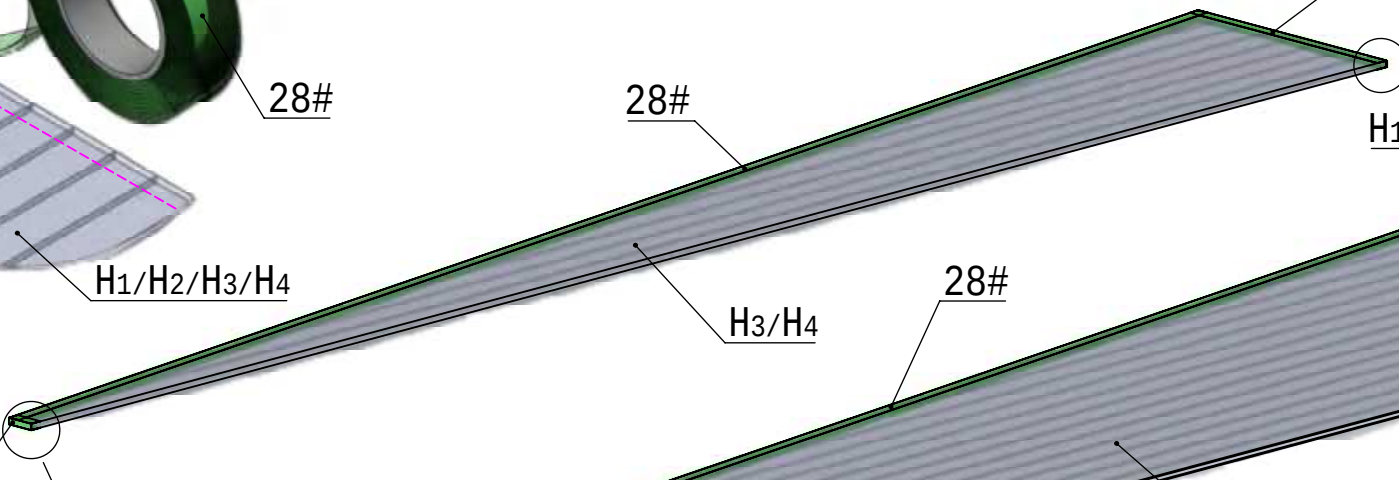

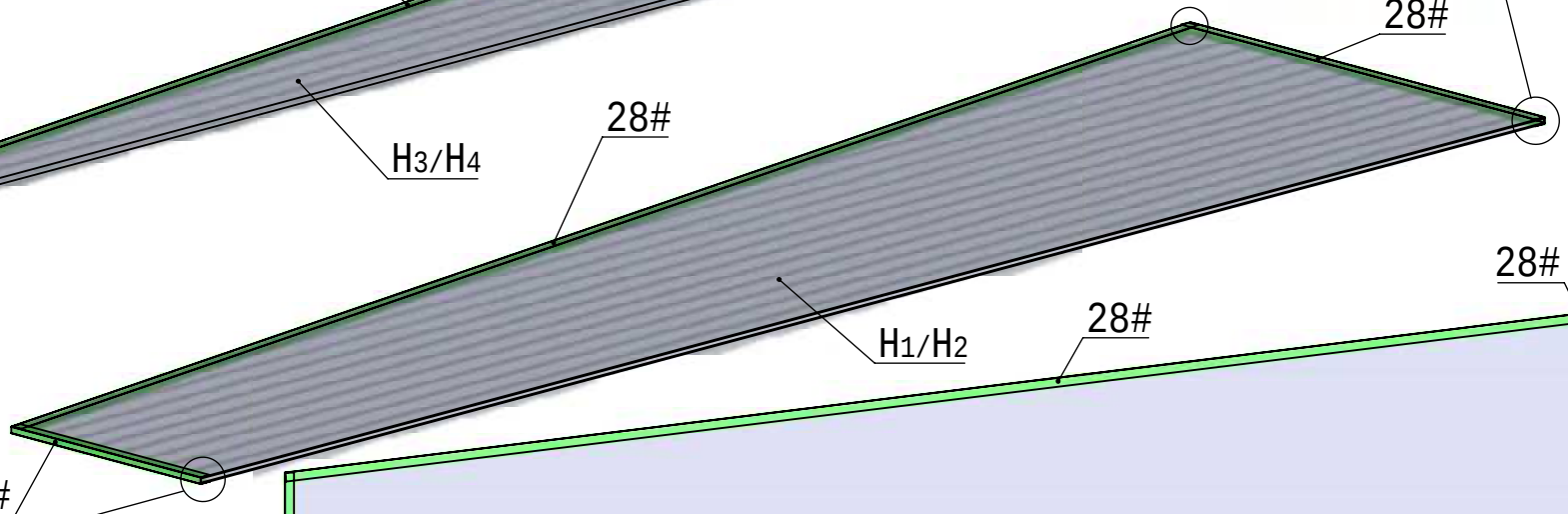

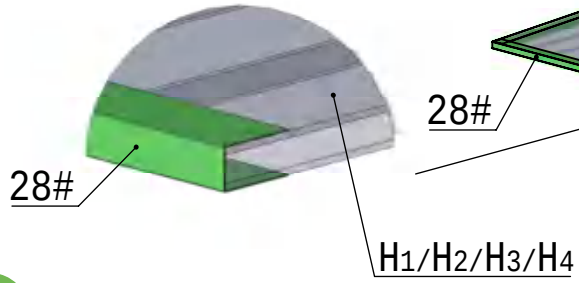

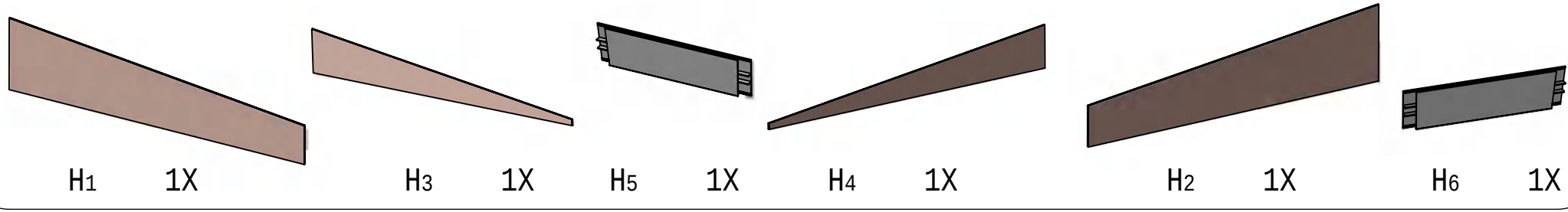

The notches of #H5 & H6 are facing inward.

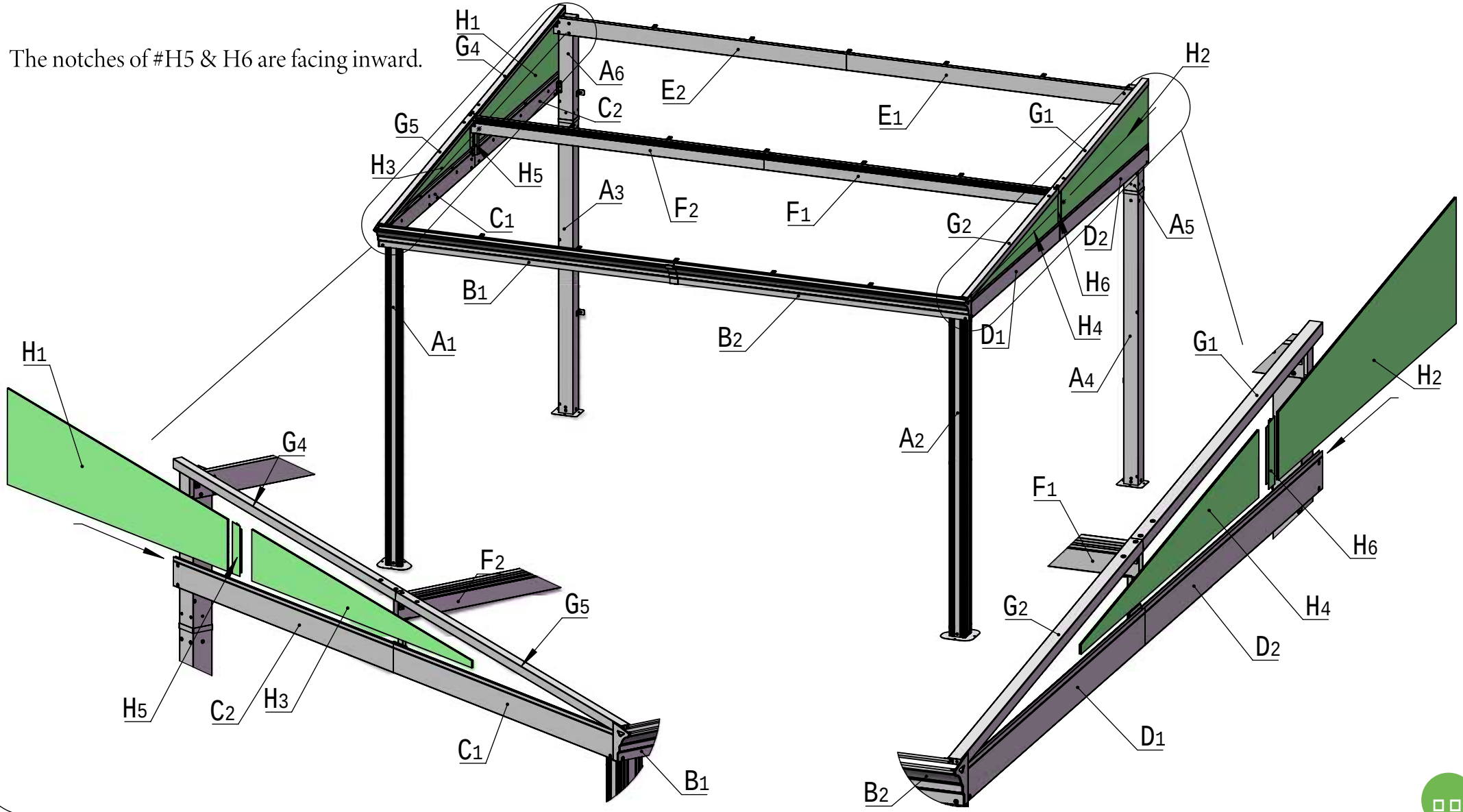

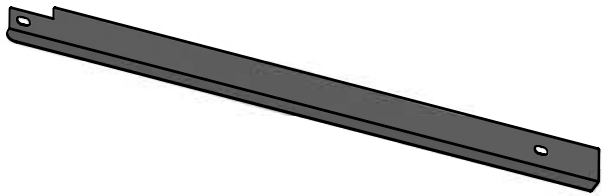

H7 1X

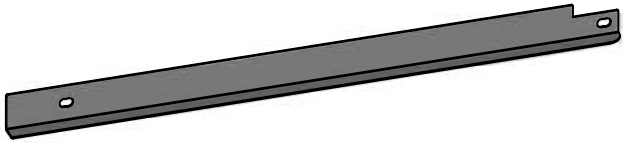

H8 1X

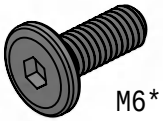

4# 4X

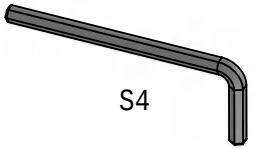

16# 1X

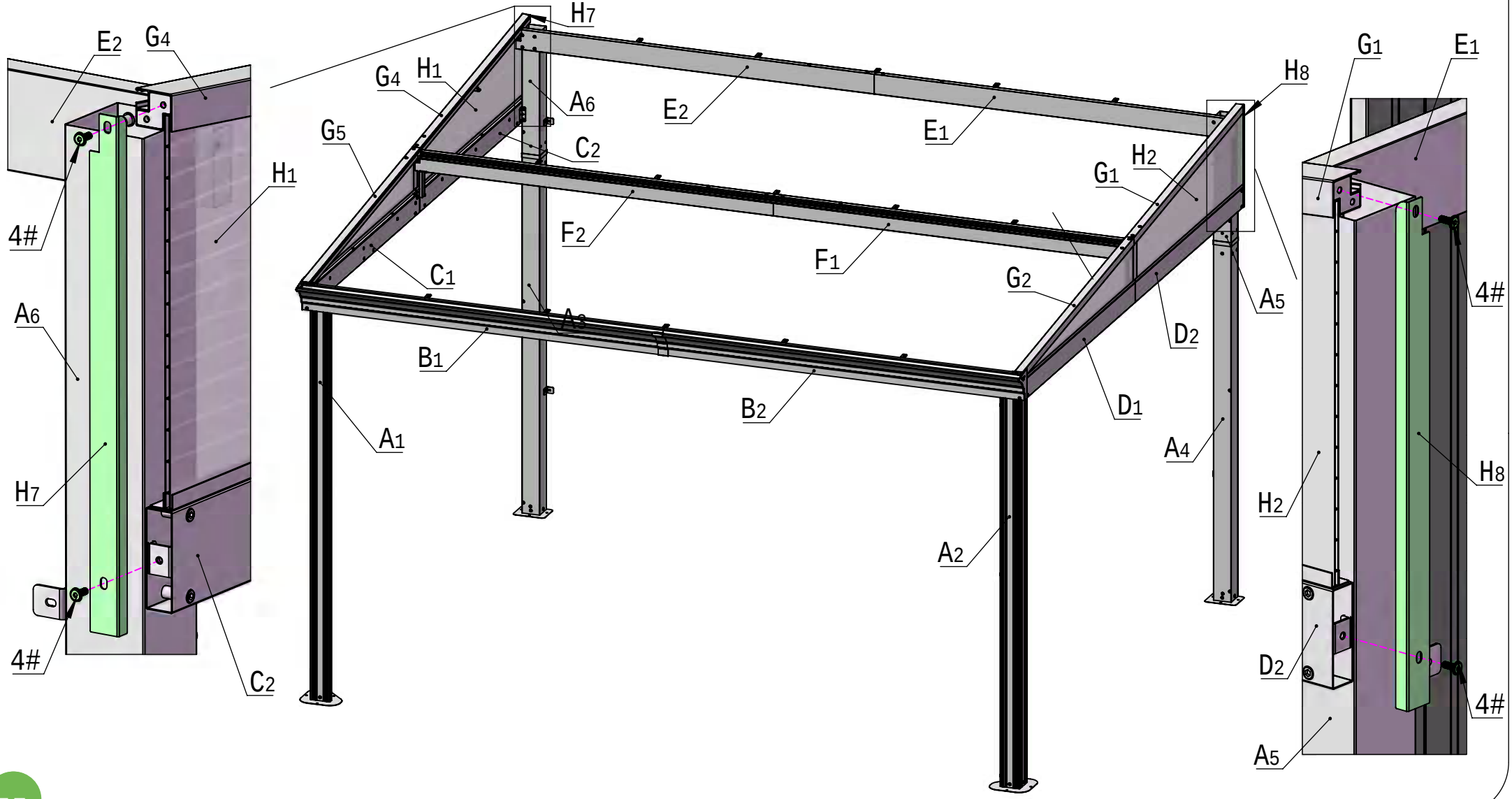

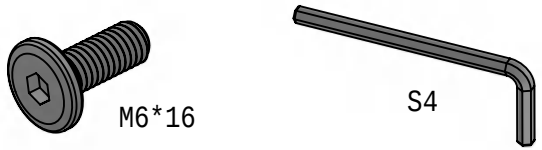
M6*16

4# 15X

S4

16# 1X

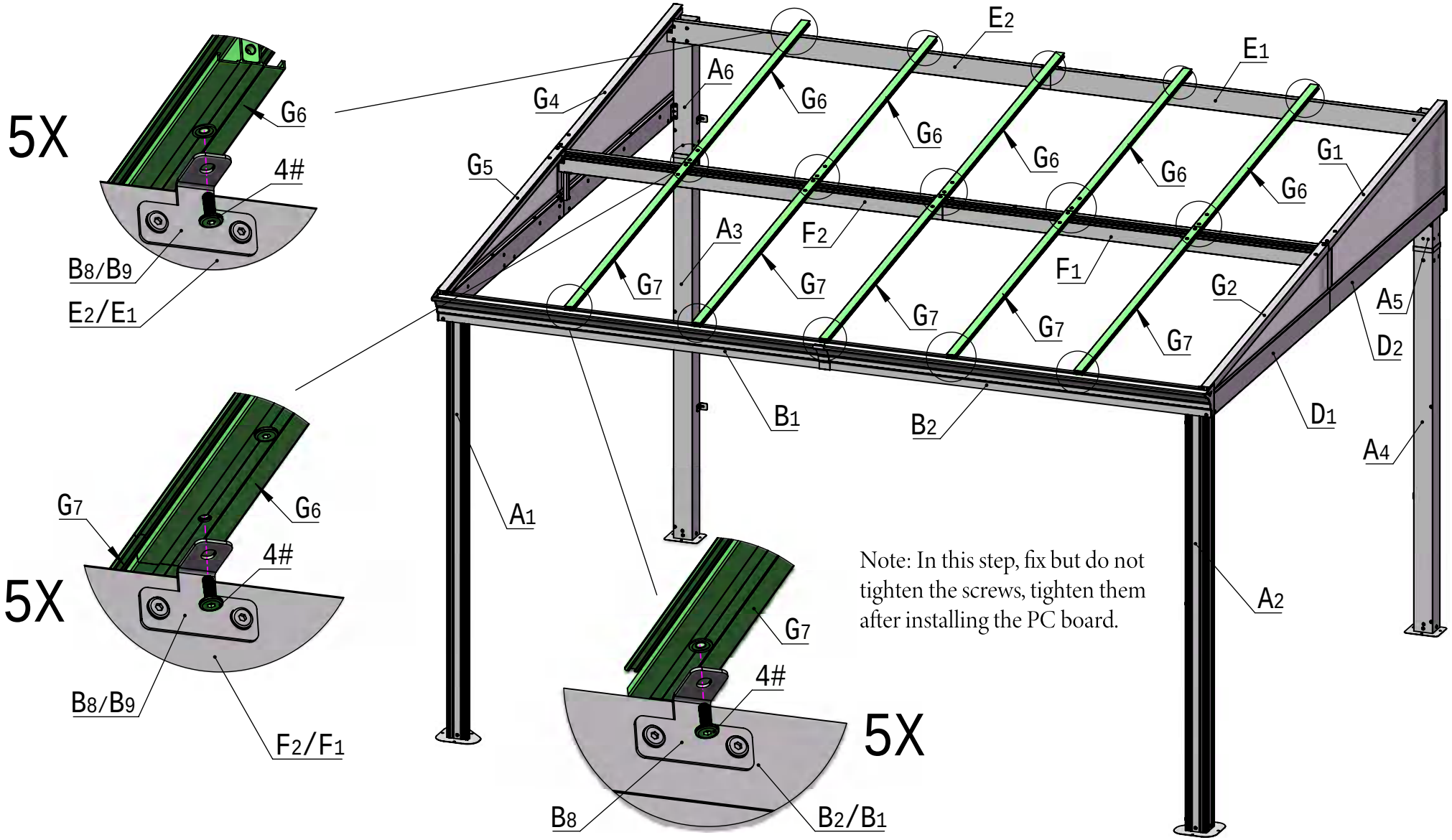
5X
G6
4#
B8/B9
E2/E1
5X
G7
G6
4#
B8/B9
F2/F1
5X
G7
4#
B8
B2/B1
E2
E1
A6
G4
G6
G5
G1
A3
F2
F1
G2
A5
D2
D1
A4
B1
B2
A1
A2
Note: In this step, fix but do not tighten the screws, tighten them after installing the PC board.

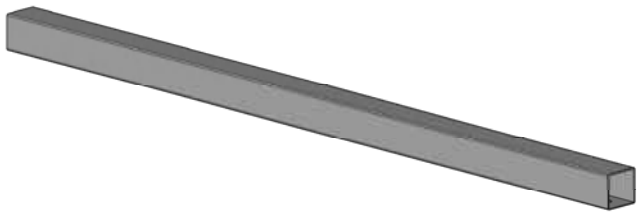

J1 2X



J2 2X



J3 2X



4# 10X

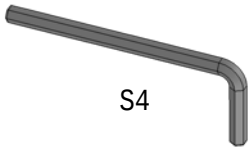

16# 1X

2X

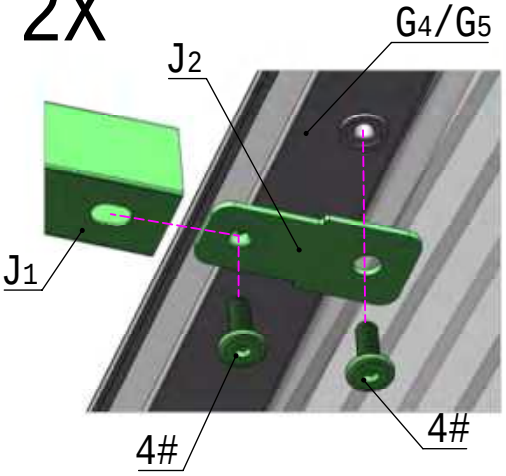

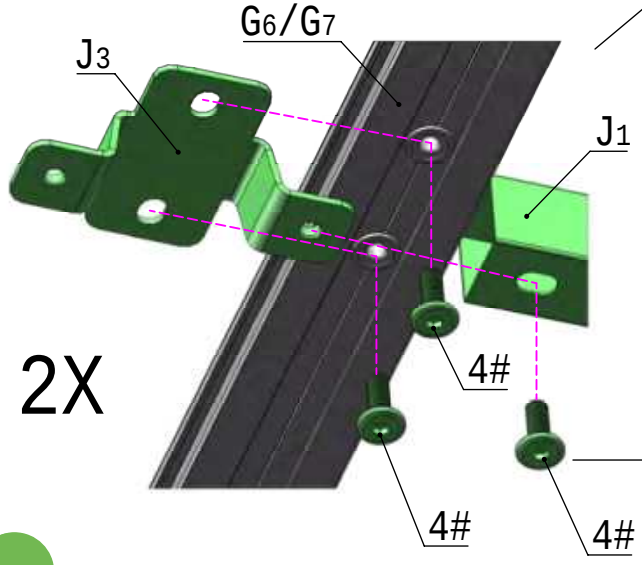

2X

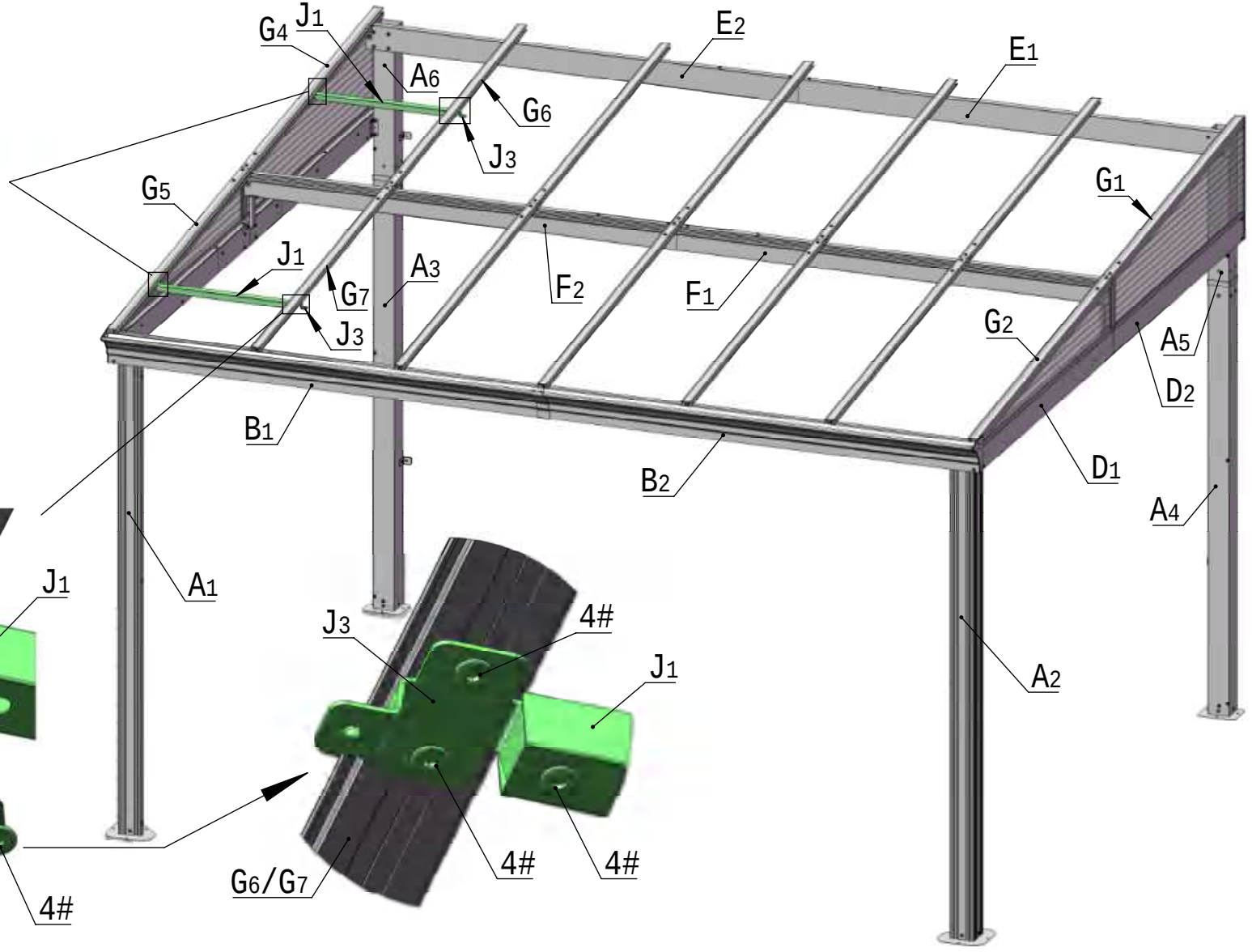

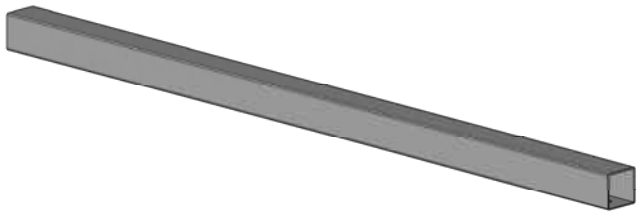

J1 10X



J2 2X



J3 8X



4# 38X

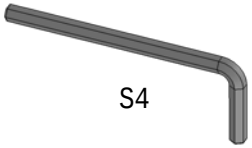

16# 1X

10X

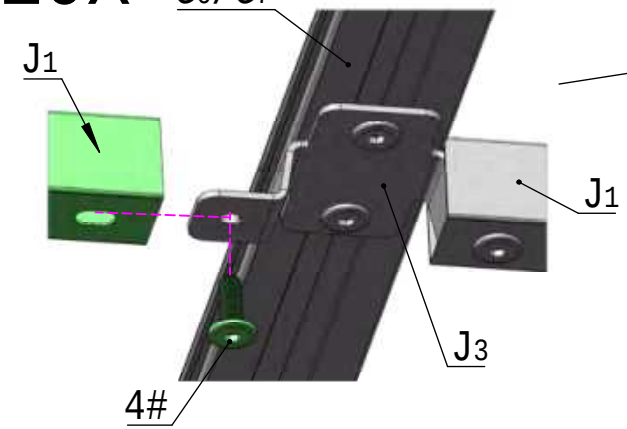

8X

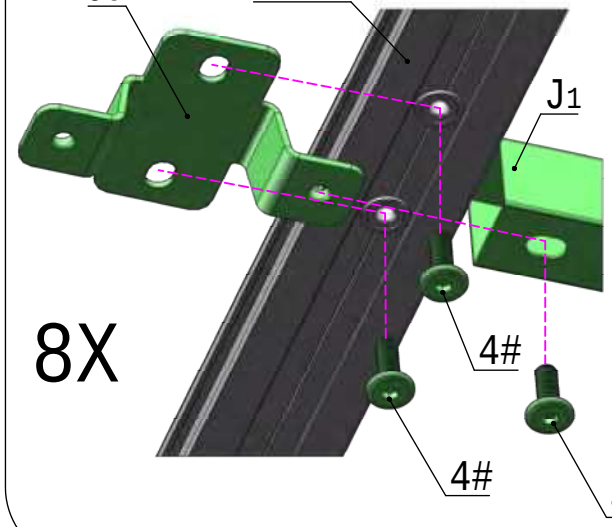

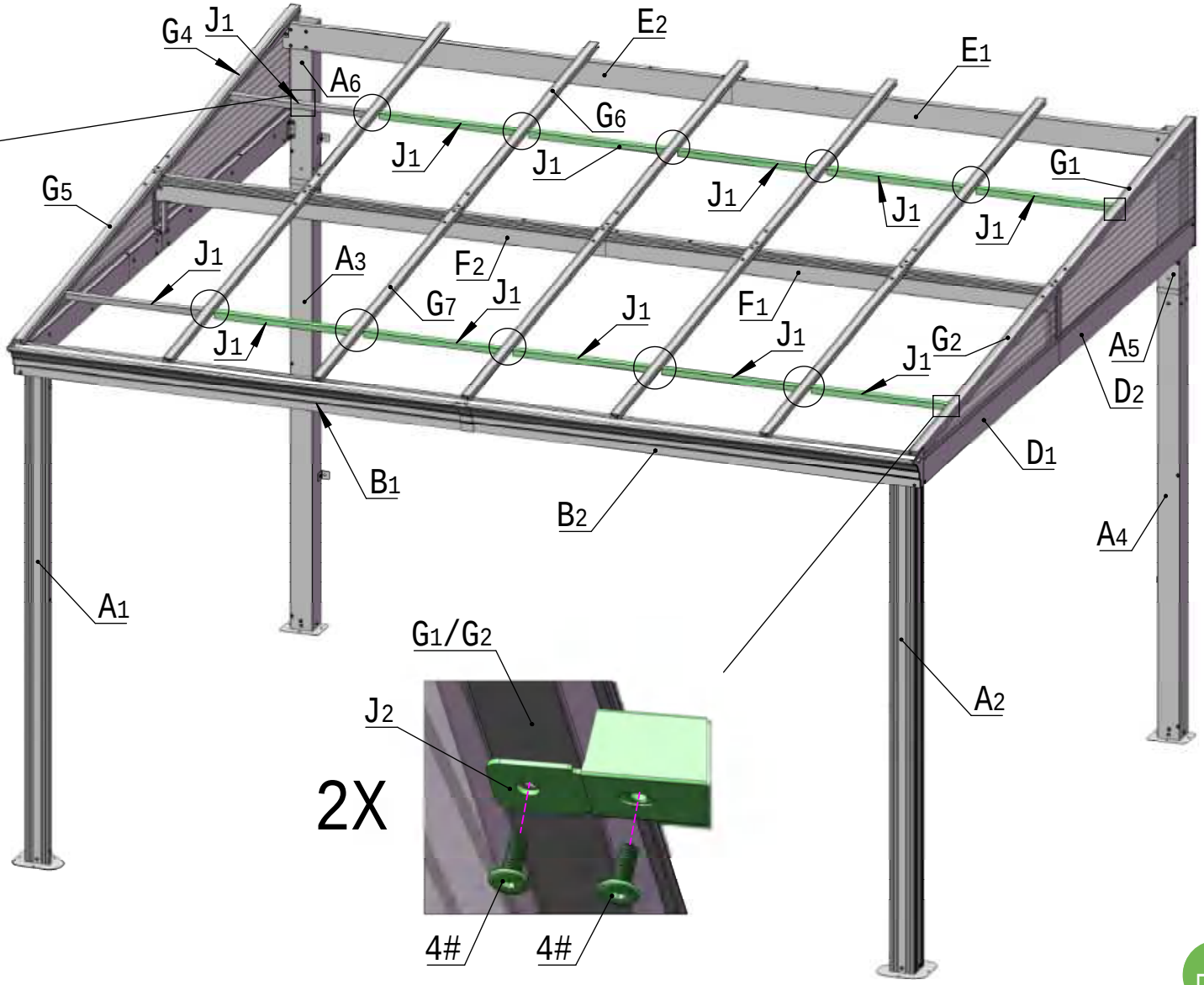

2X



28# 1X

Note: Before installing the top panel, make sure to remove the protective film.
Then centre the tape (#28) on the polycarbonate panel so it is equal on both sides.
Fold the tape around the edges and rub gently to avoid damaging the tape.

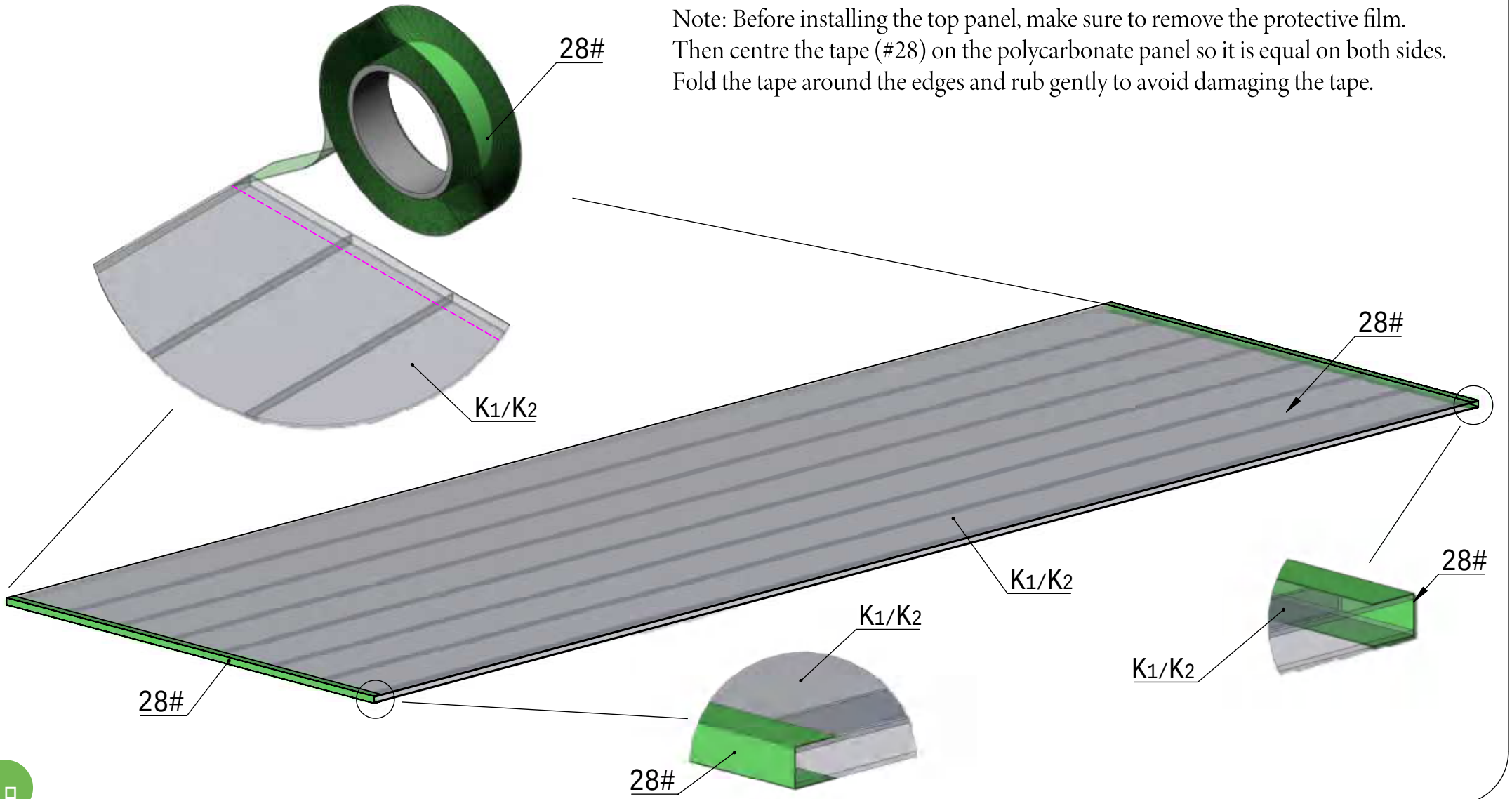

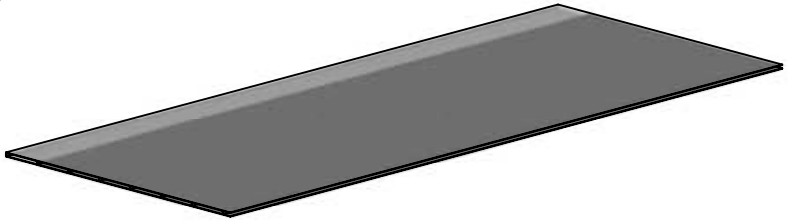

K1 1X

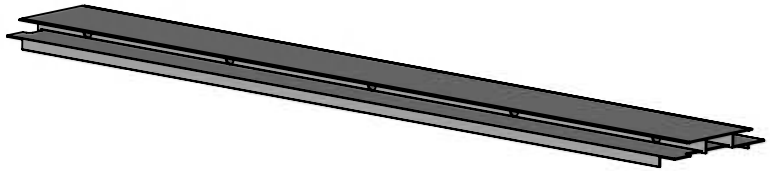

K3 1X

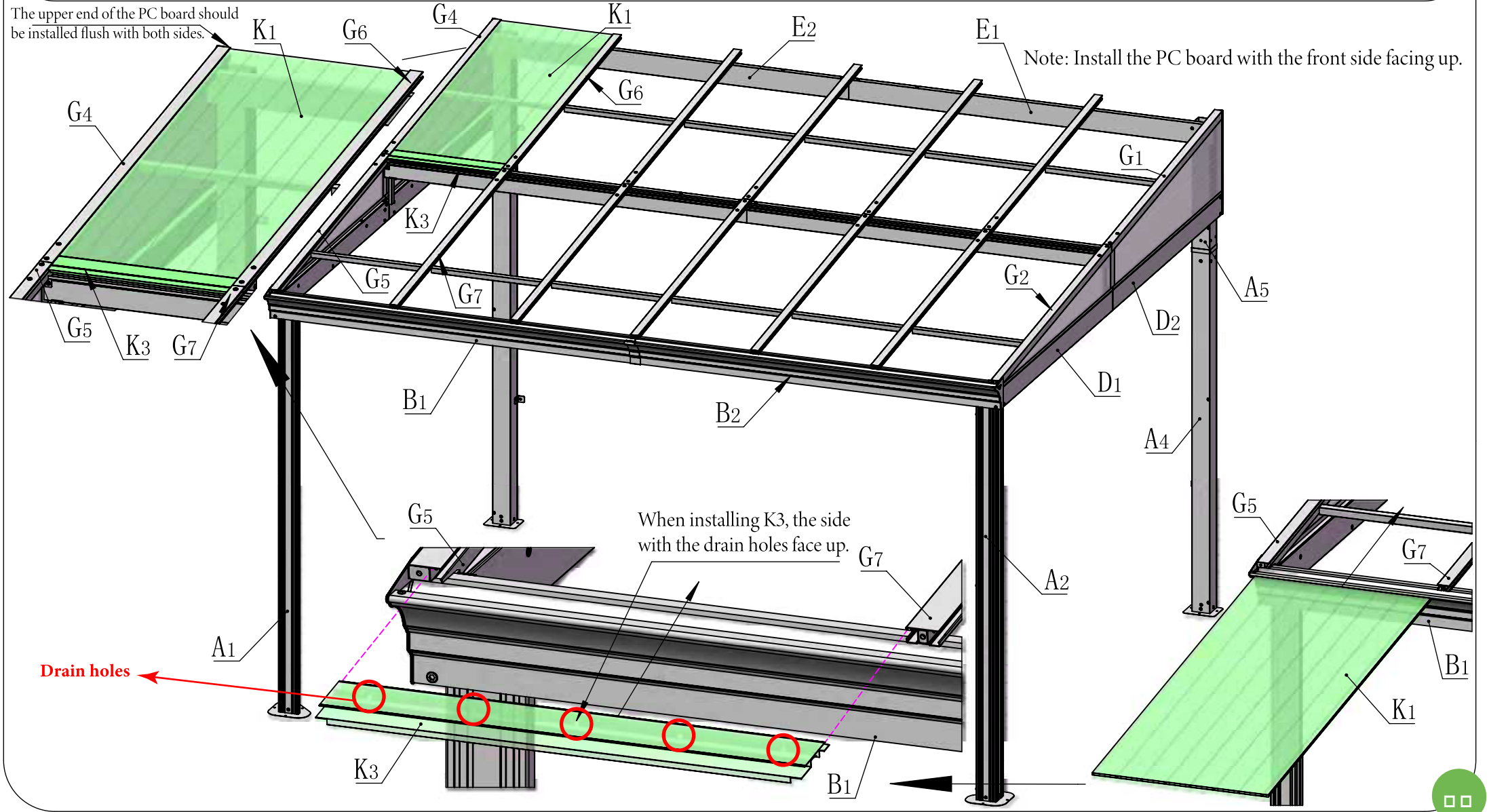
The upper end of the PC board should be installed flush with both sides.
K1
G6
G4
K1
E2
E1
Note: Install the PC board with the front side facing up.
G6
G4
G1
K3
G5
G7
G2
A5
D2
G5
K3
G7
D1
B1
B2
A4
G5
When installing K3, the side with the drain holes face up.
G7
A2
G5
G7
A1
Drain holes
B1
K1
K3
B1

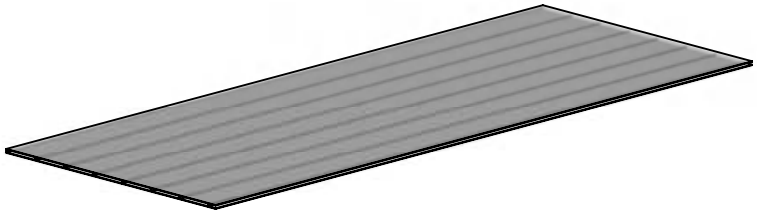

K2 1X



15# 1X

Note: Install the PC board with the front side facing up.

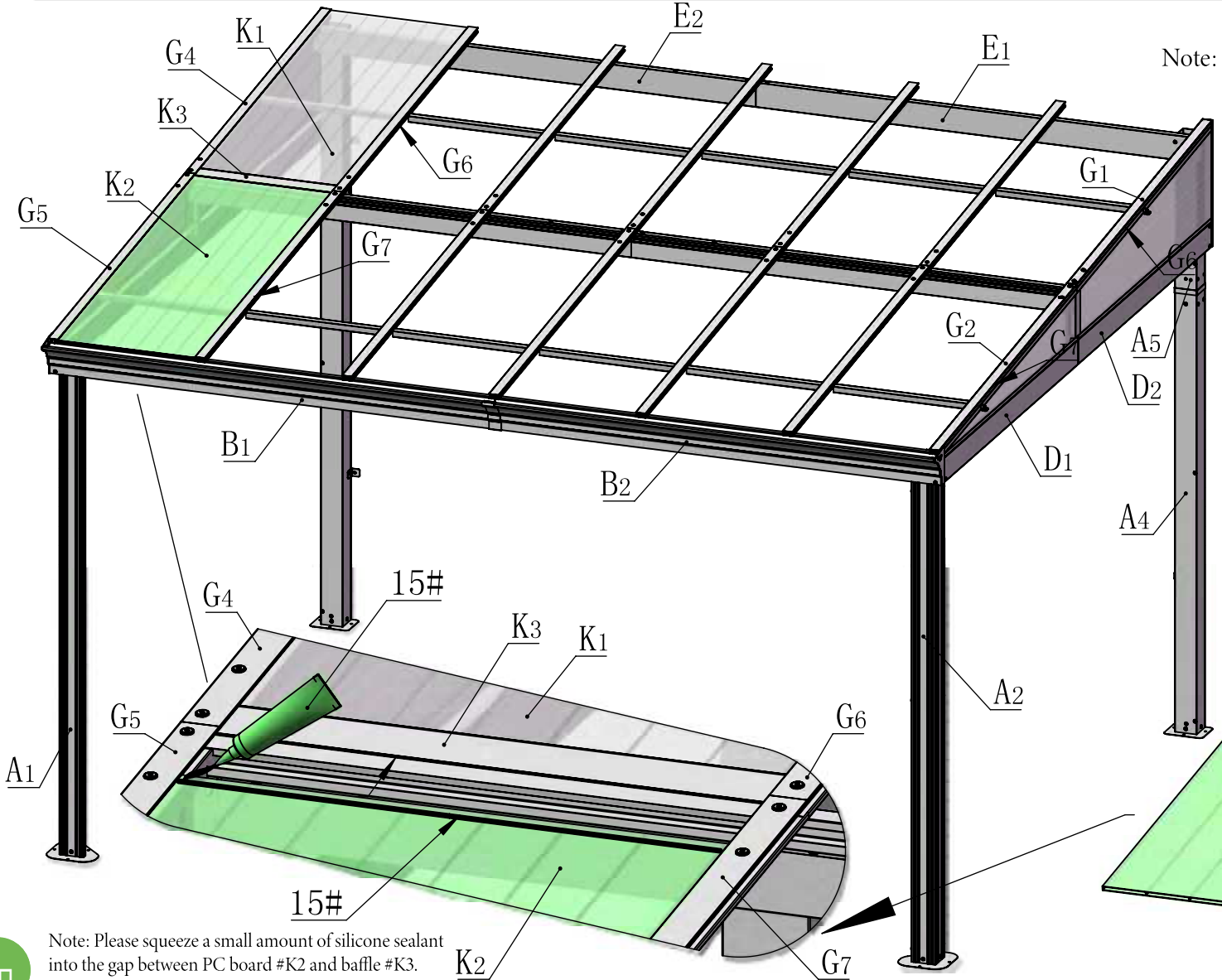

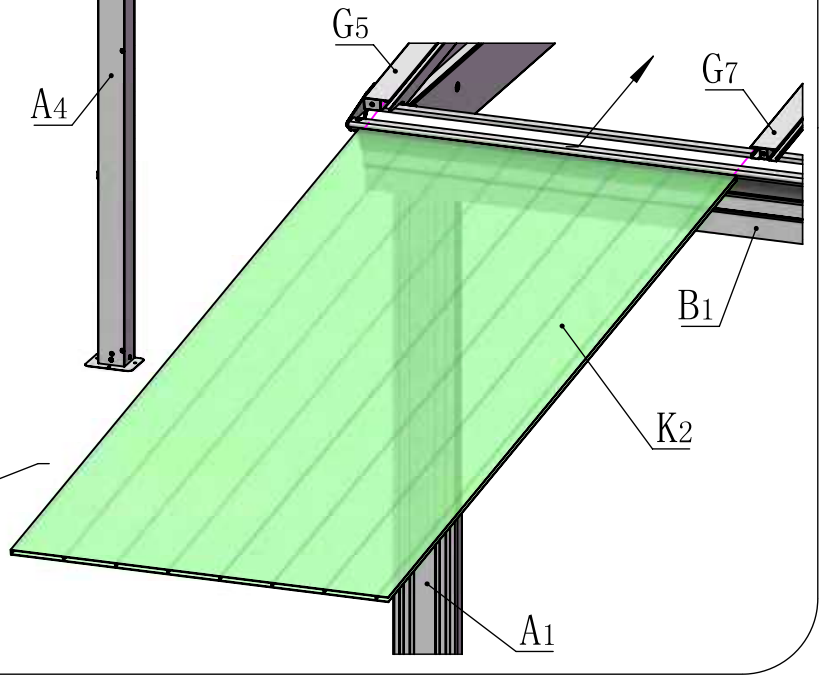

Note: Please squeeze a small amount of silicone sealant into the gap between PC board #K2 and baffle #K3.

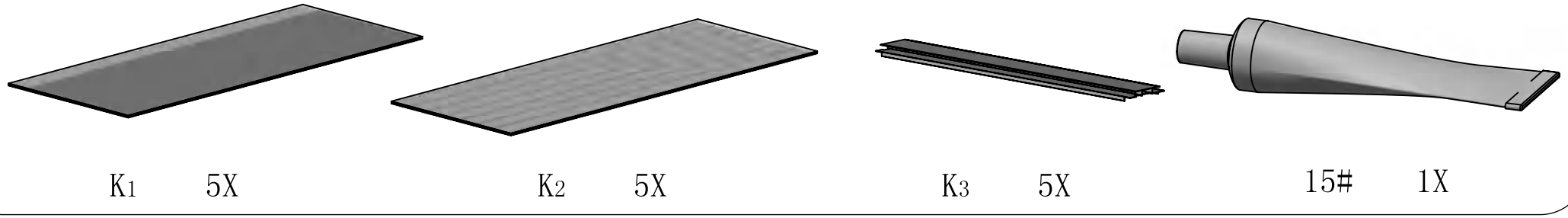

K1 5X K2 5X K3 5X 15# 1X

Note: Install the PC board with the front side facing up.

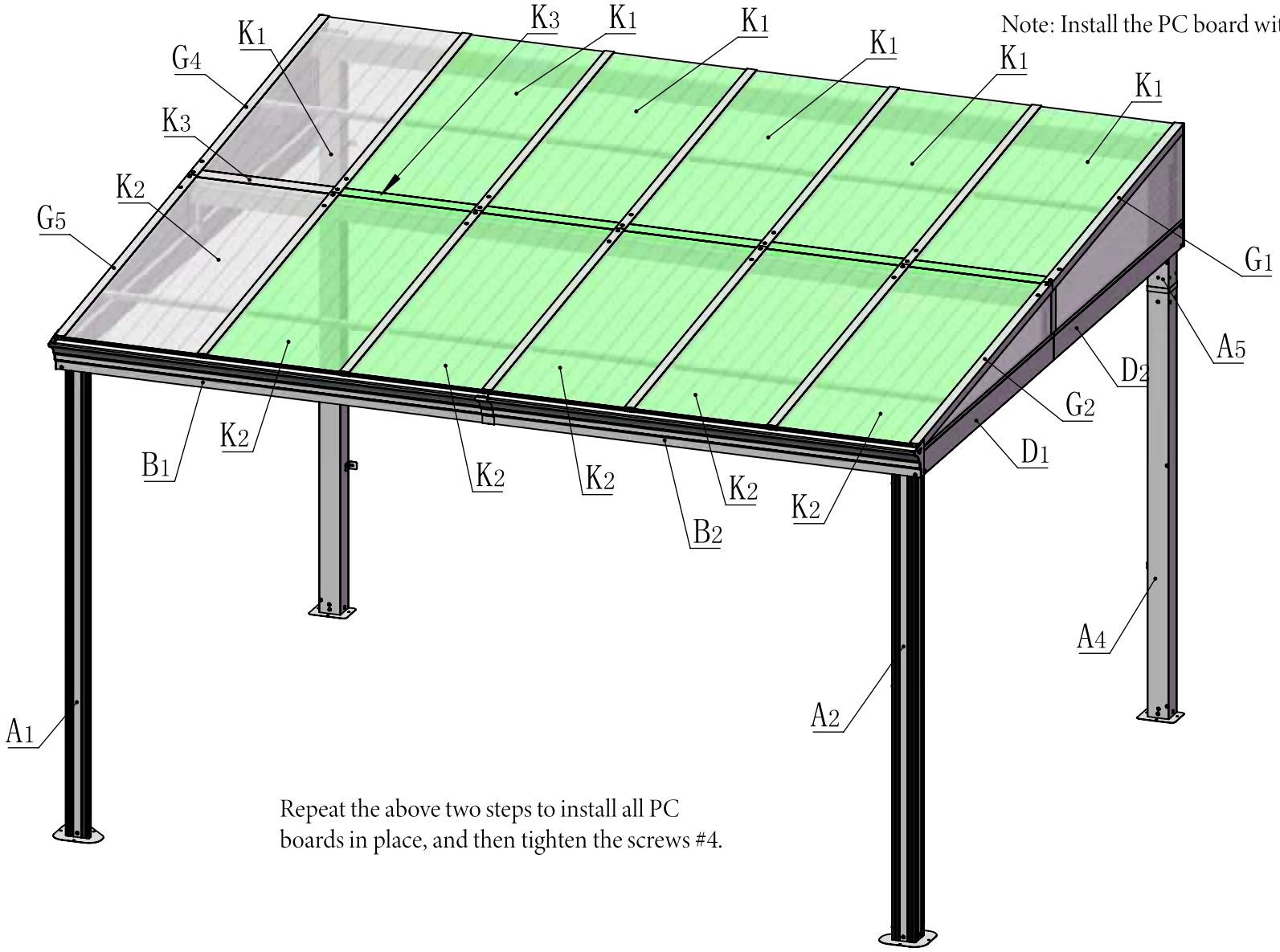

Repeat the above two steps to install all PC boards in place, and then tighten the screws #4.

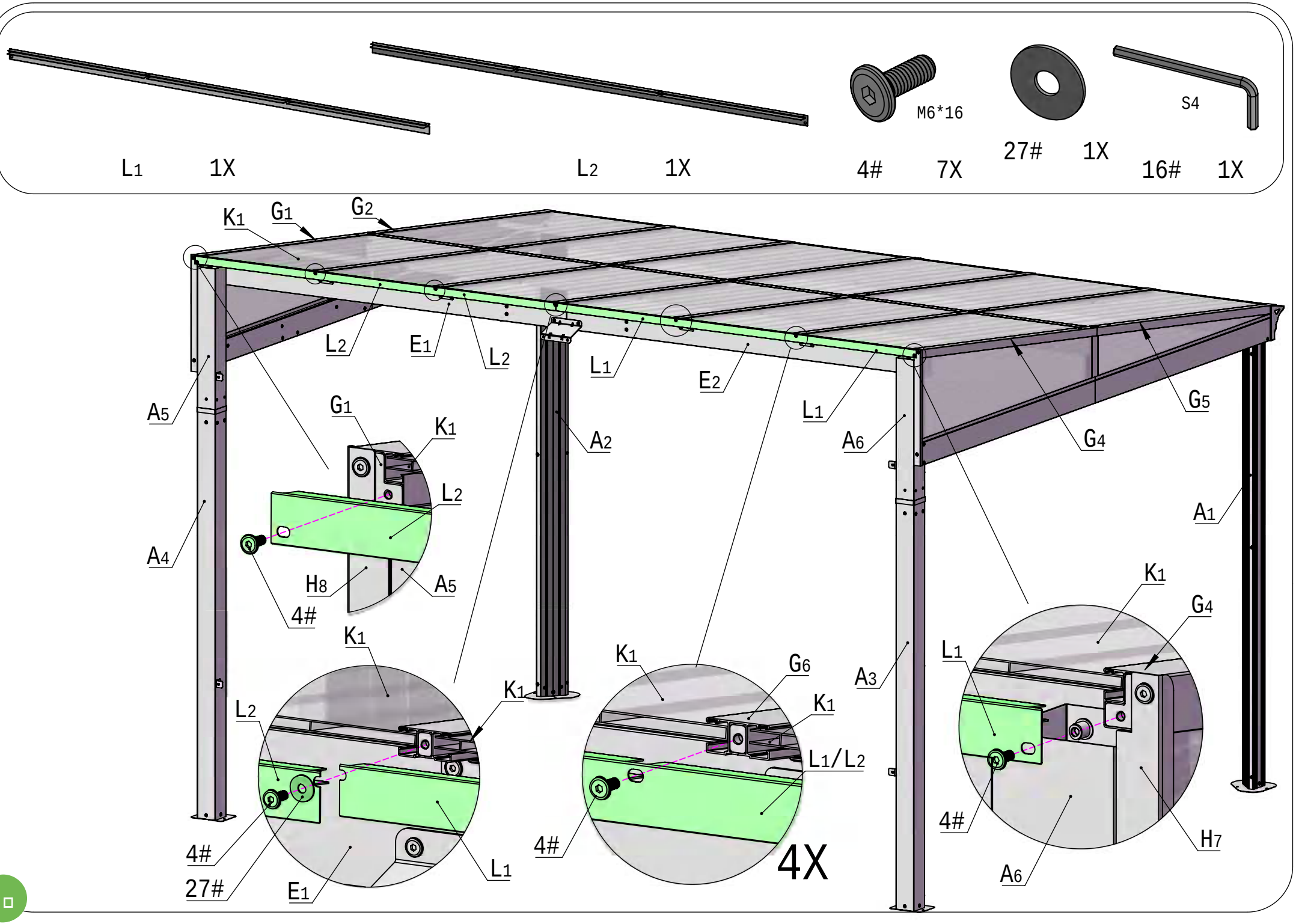
L1 1X
L2 1X
M6*16
4# 7X
27# 1X
S4
16# 1X
K1
G1
G2
L2
E1
L2
L1
E2
L1
G5
G4
A5
A2
A6
A1
A4
H8
A5
4#
K1
L2
4#
27#
E1
L1
K1
K1
G6
K1
L1/L2
4#
4X
A3
K1
G4
L1
4#
A6
H7

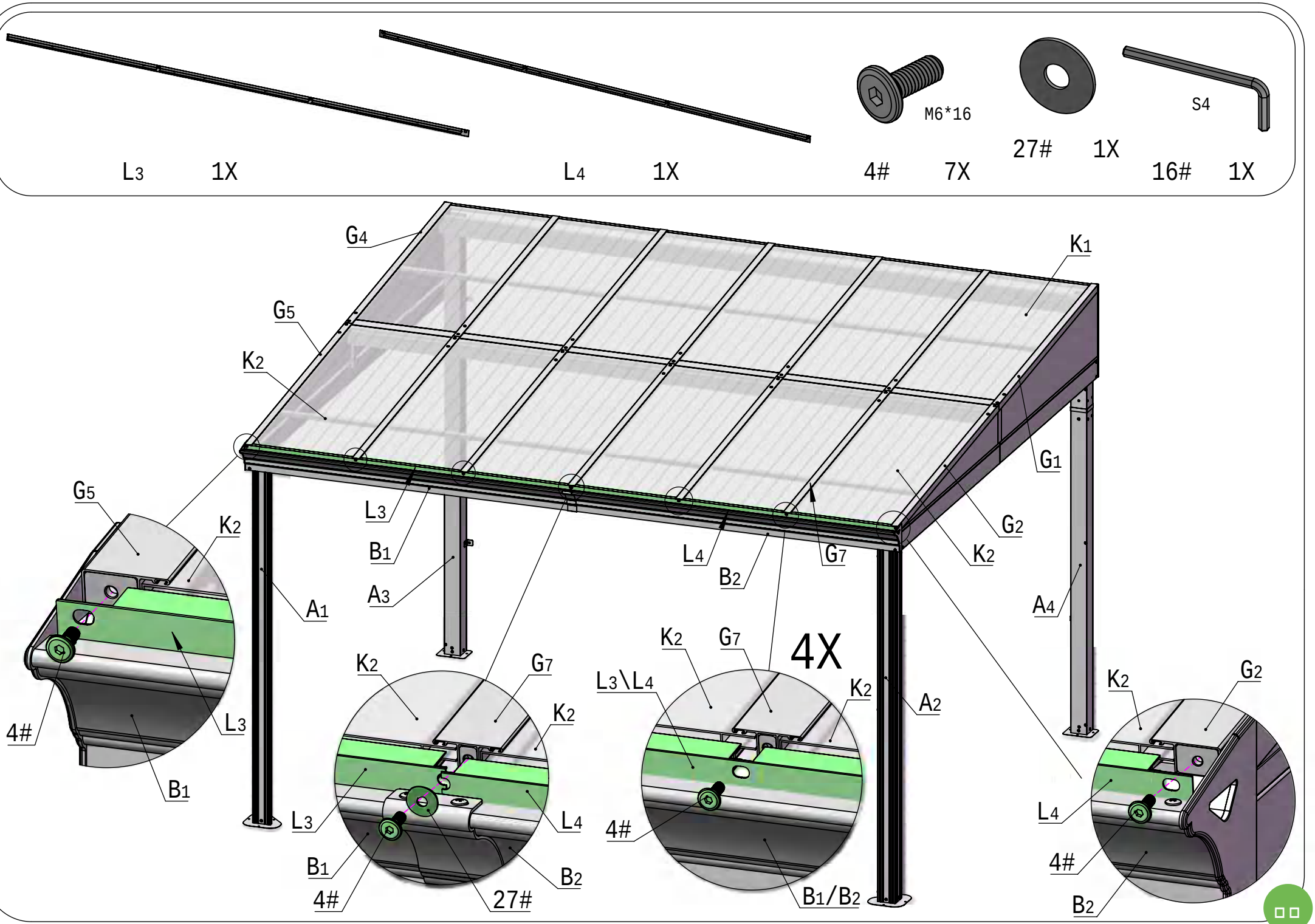
L3 1X
L4 1X
M6*16
4# 7X
27# 1X
S4
16# 1X
G4
G5
K2
K1
G1
G2
K2
A4
L3
B1
A3
A1
L4
B2
G7
4X
K2
G7
K2
L3\L4
K2
A2
G5
K2
4#
L3
B1
L3
B1
4#
27#
L4
B2
4#
B1/B2
K2
G2
L4
4#
B2

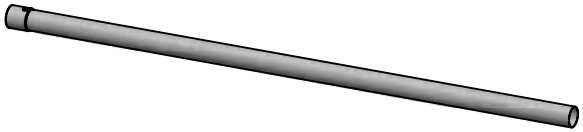

M1 1X

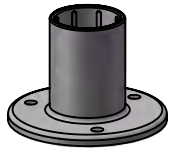

M3 1X

Support Tube Assembly

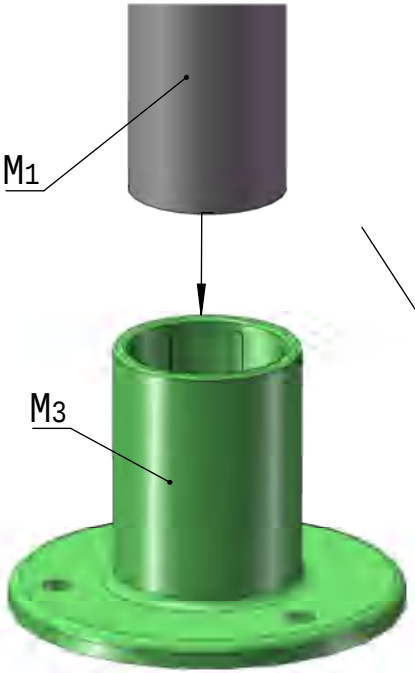

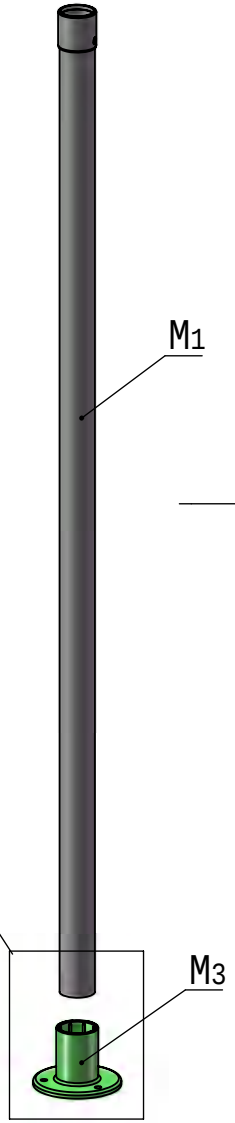

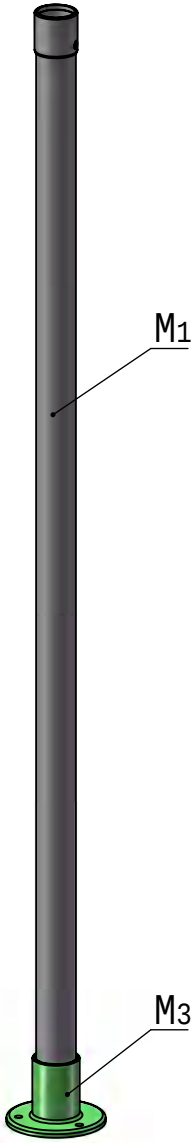



M2 1X

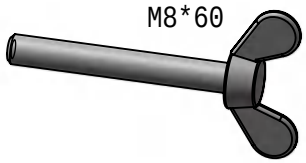

12# 1X



13# 1X

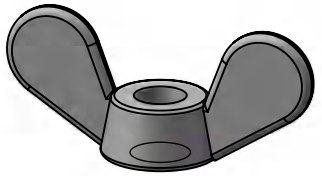

14# 1X

Adjust the length of the support tubes according to the slope.

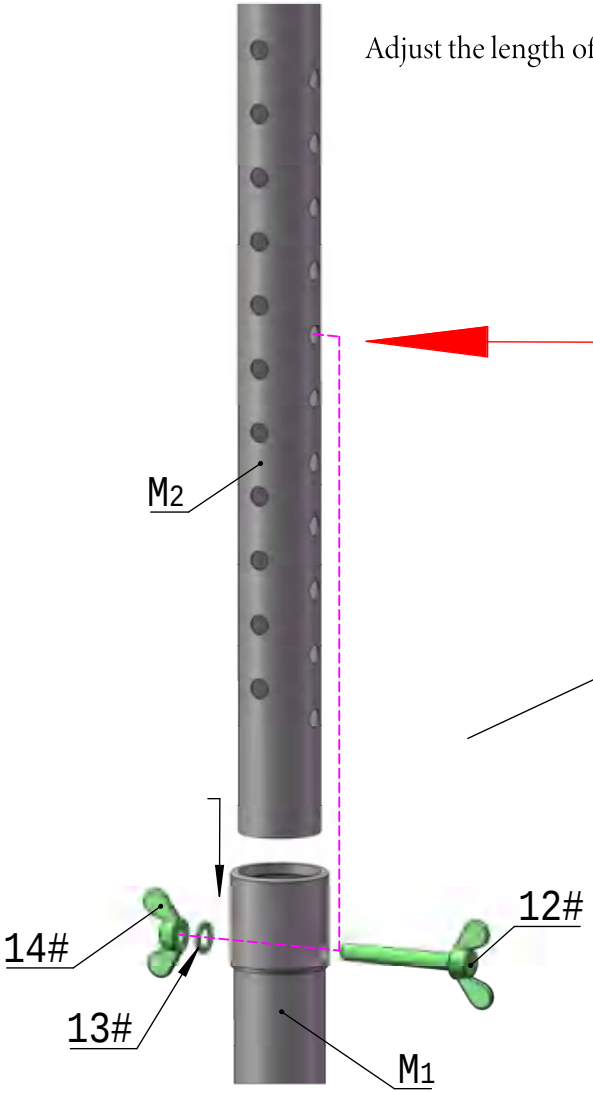

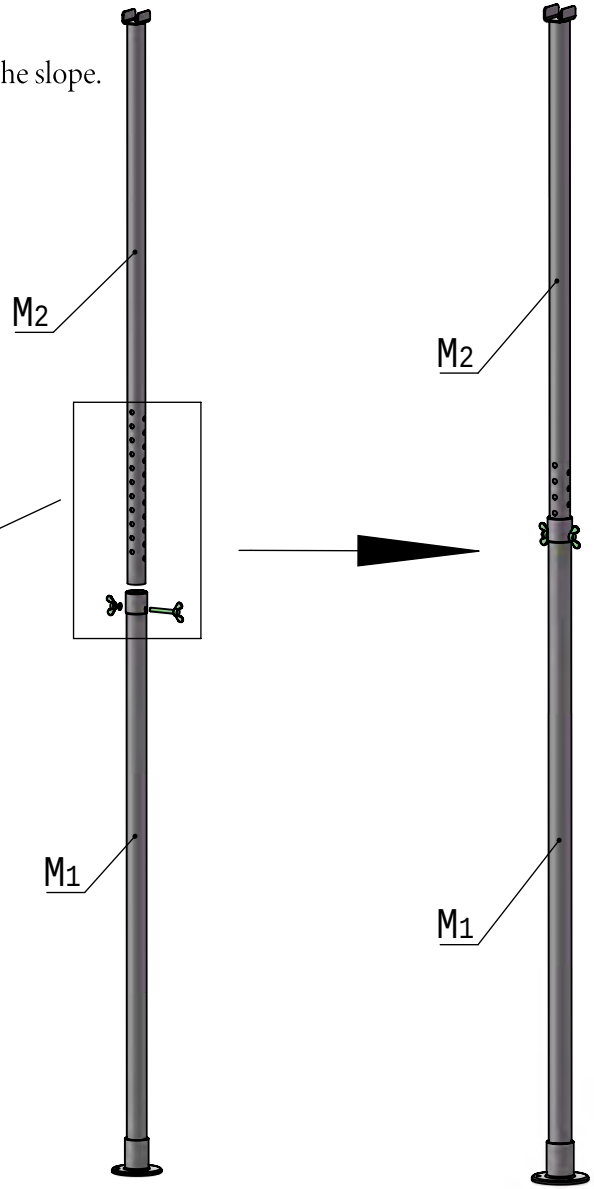

The support tube can strengthen the weight capacity of the roof. In bad weather, especially snowstorm, the support tube is essentially need to prevent the roof from collapsing under heavy snow. In daily life, you can put it away.



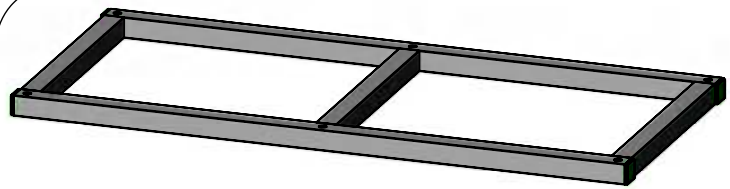

N1 6X

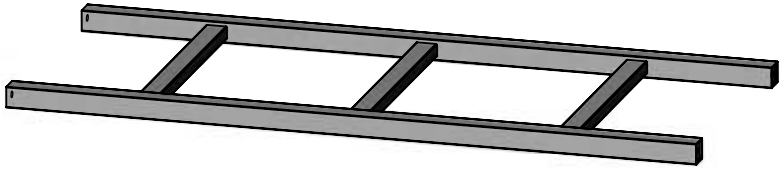

N2 3X



3# 12X

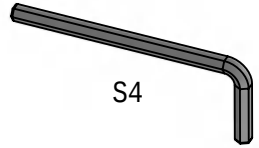

16# 1X

3X

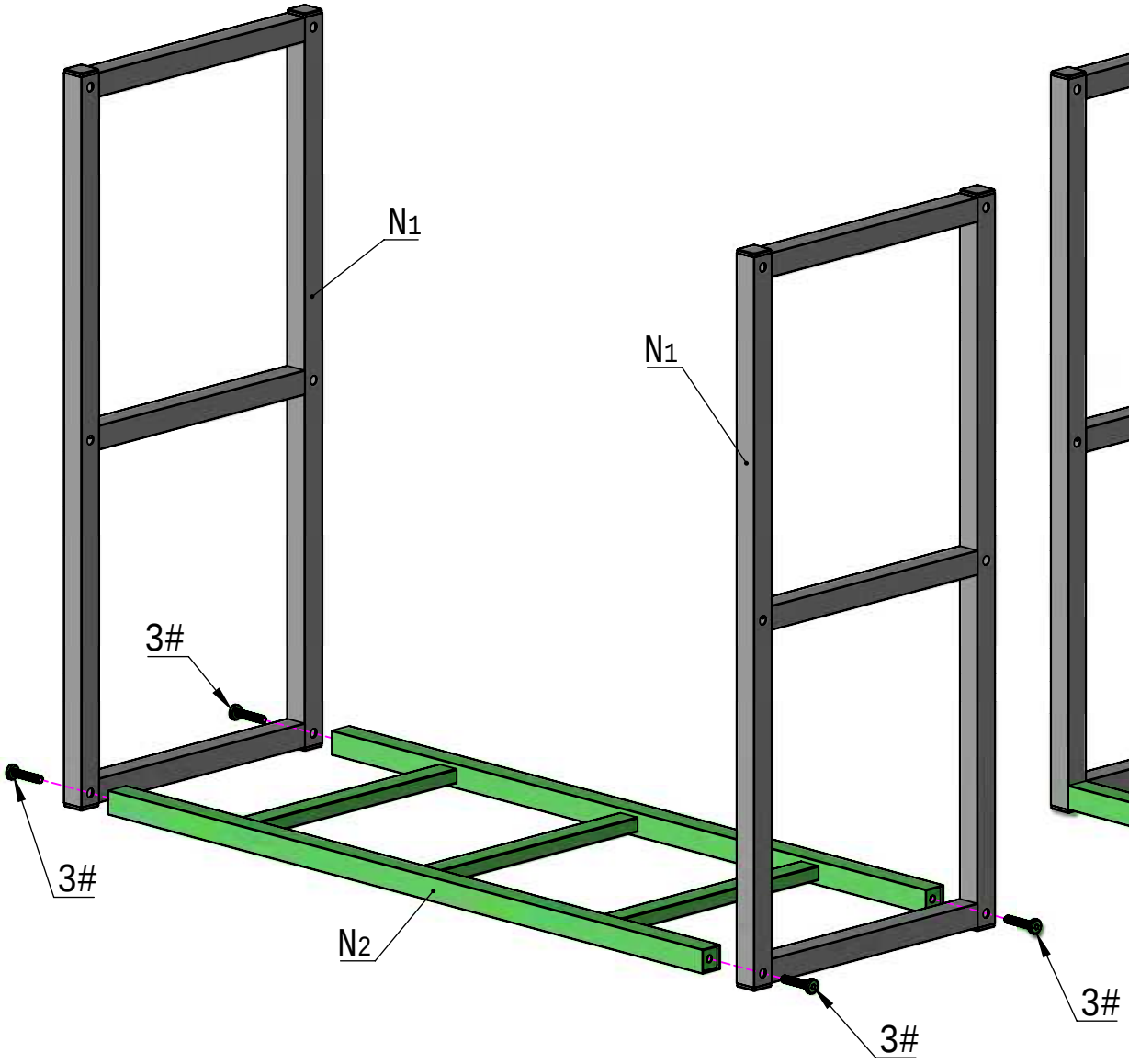

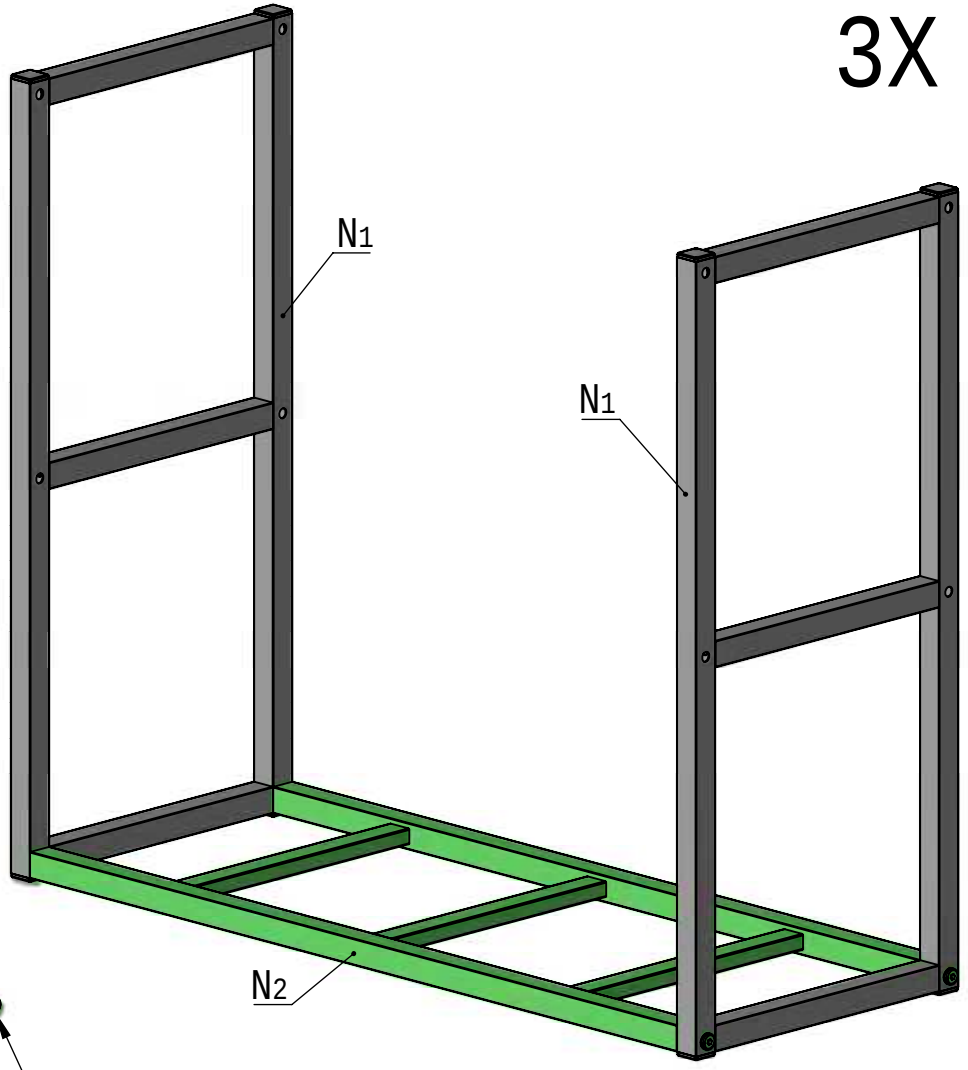

Position the screws, but do not tighten them.

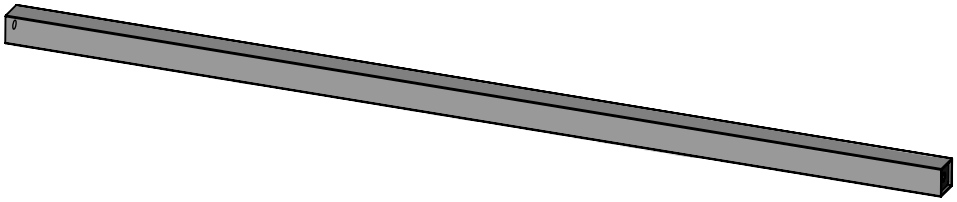

N3 12X

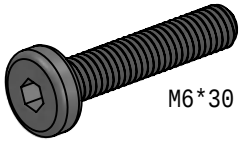

3# 24X

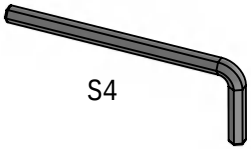

16# 1X

3X

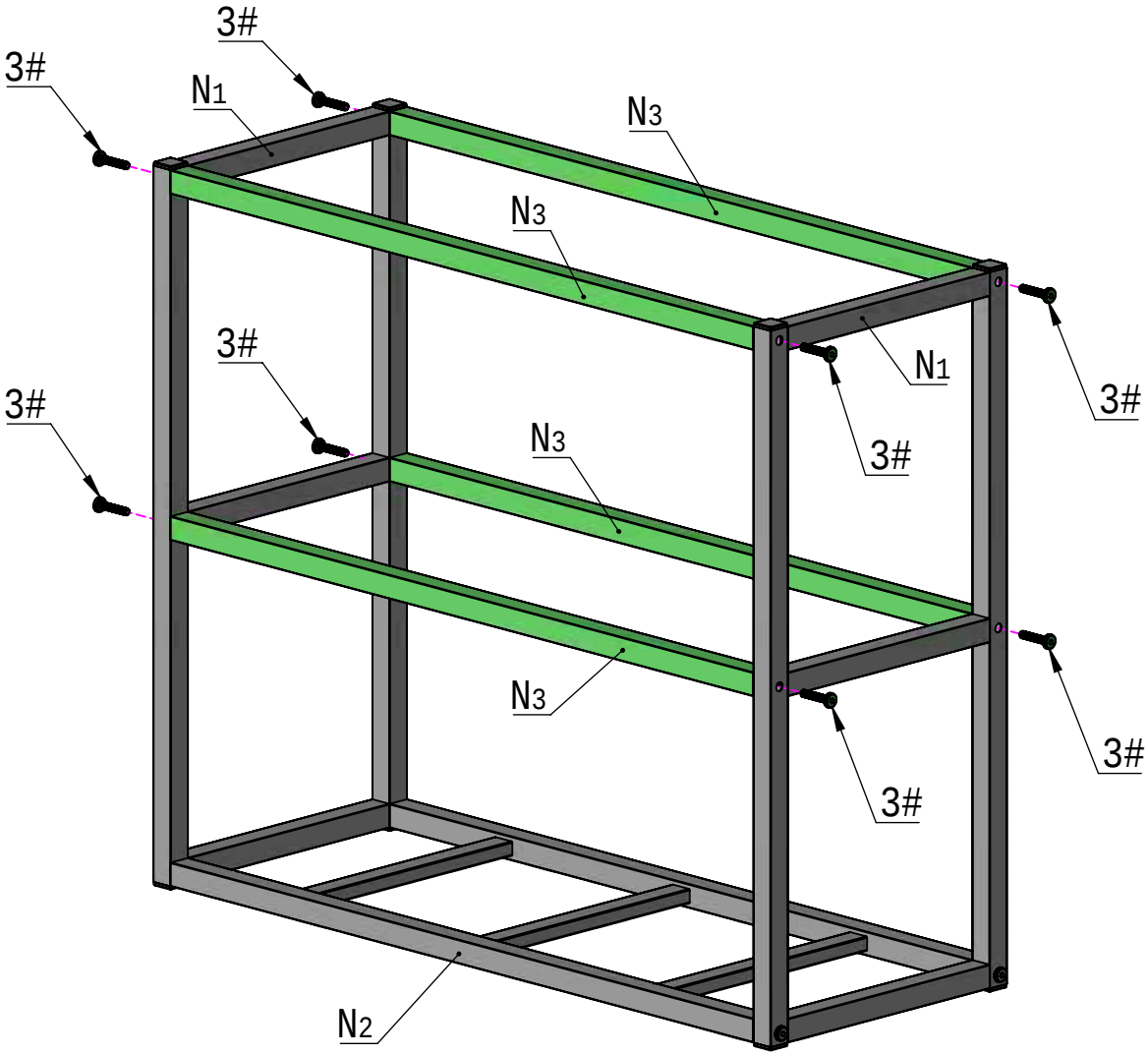

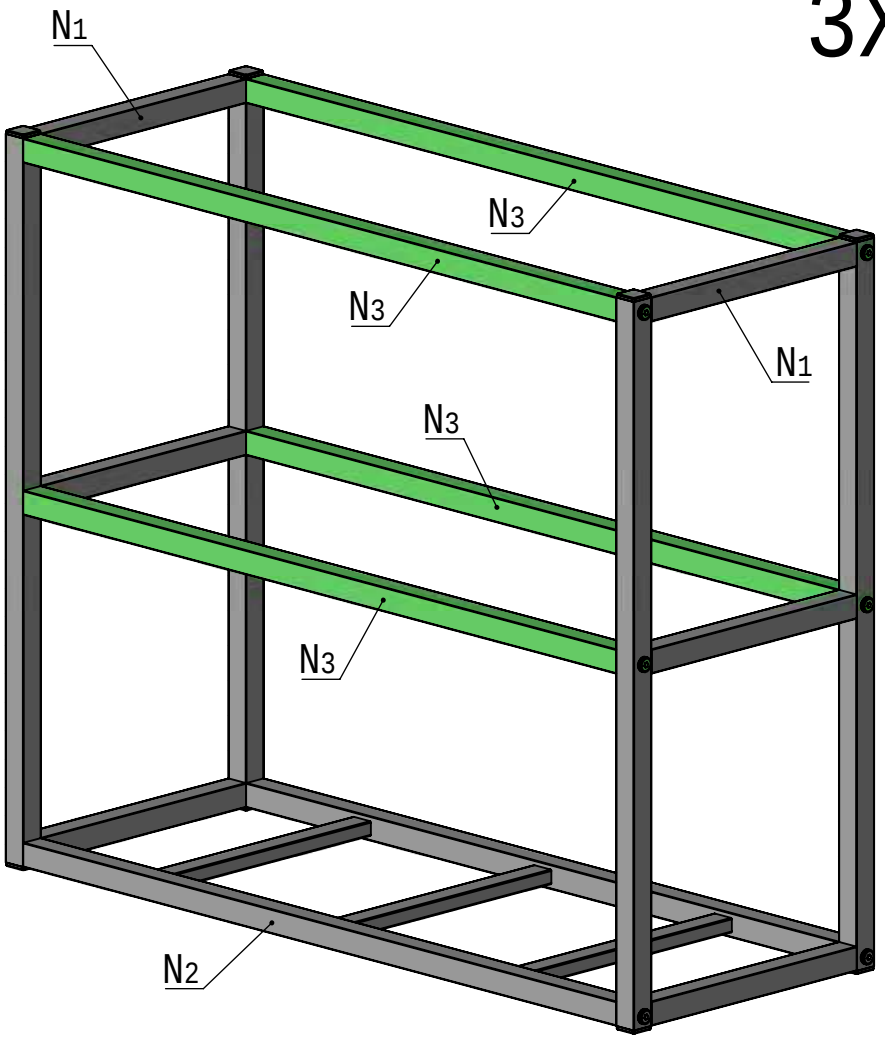

Tighten all screws after they are positioned.

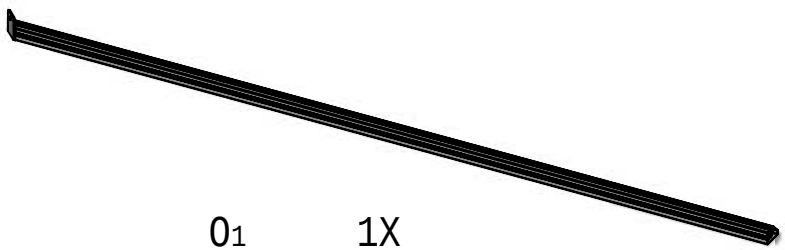

01 1X

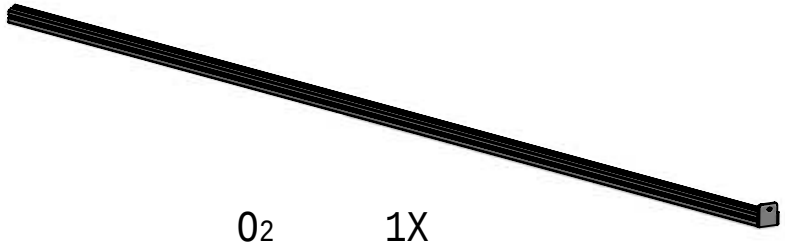

02 1X



24# 8X

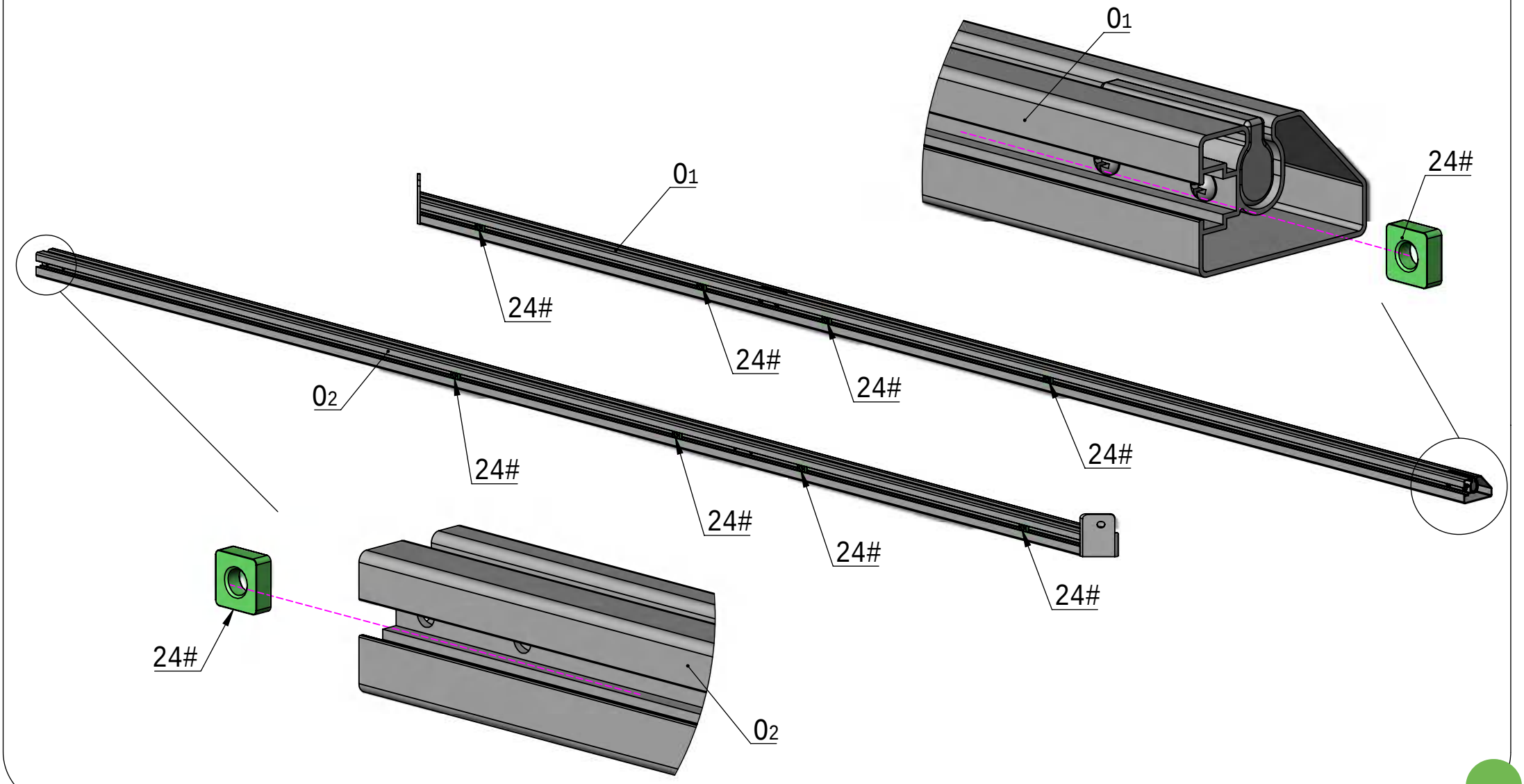

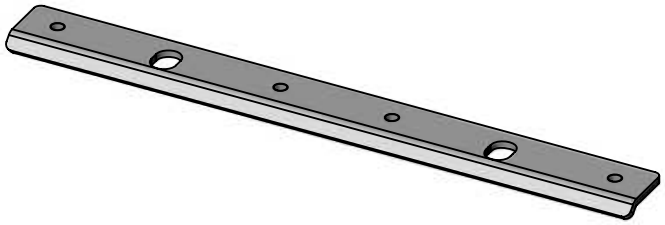

03 1X

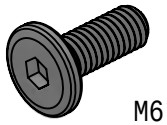

M6*16

4# 4X

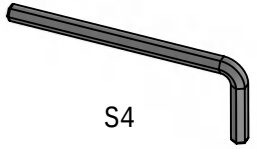

S4

16# 1X

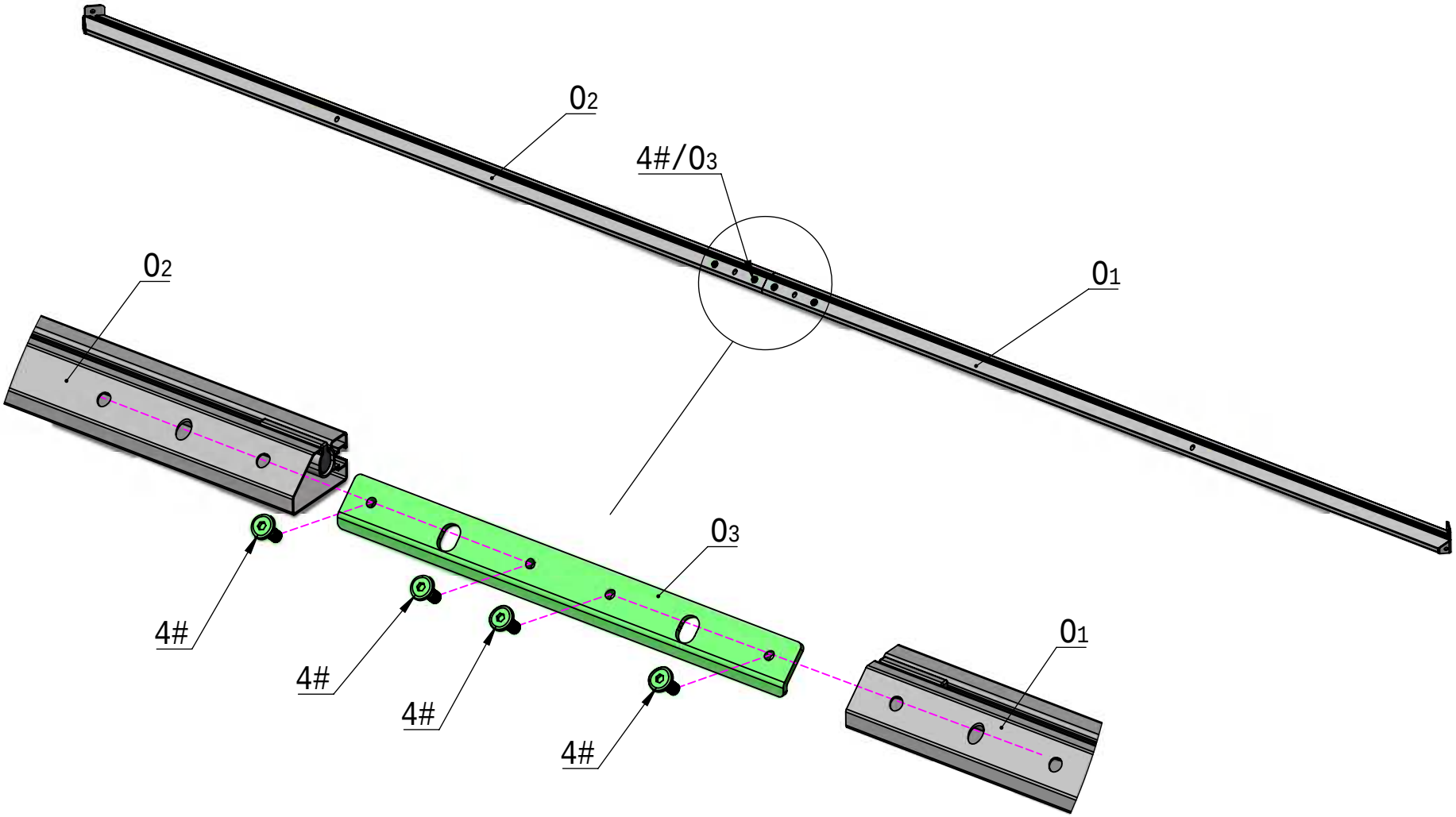



04 1X

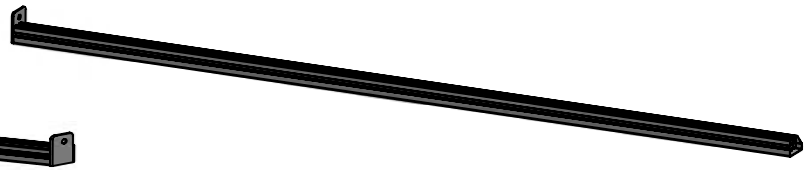

05 1X

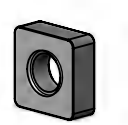

24# 6X

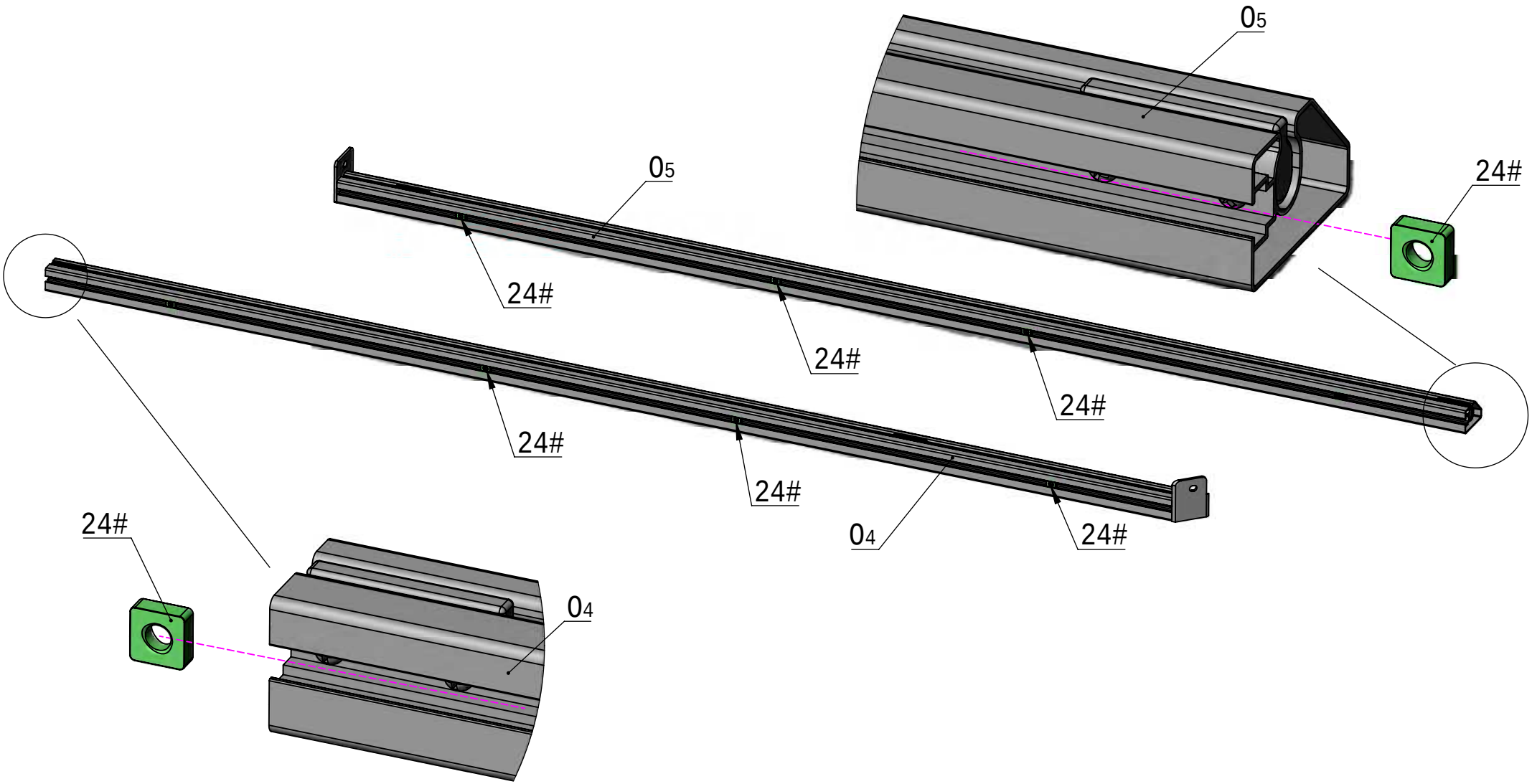

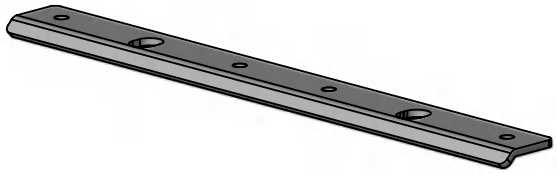

03 1X

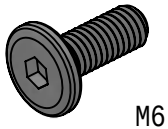

M6*16

4# 4X

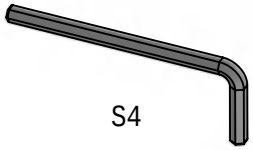

S4

16# 1X

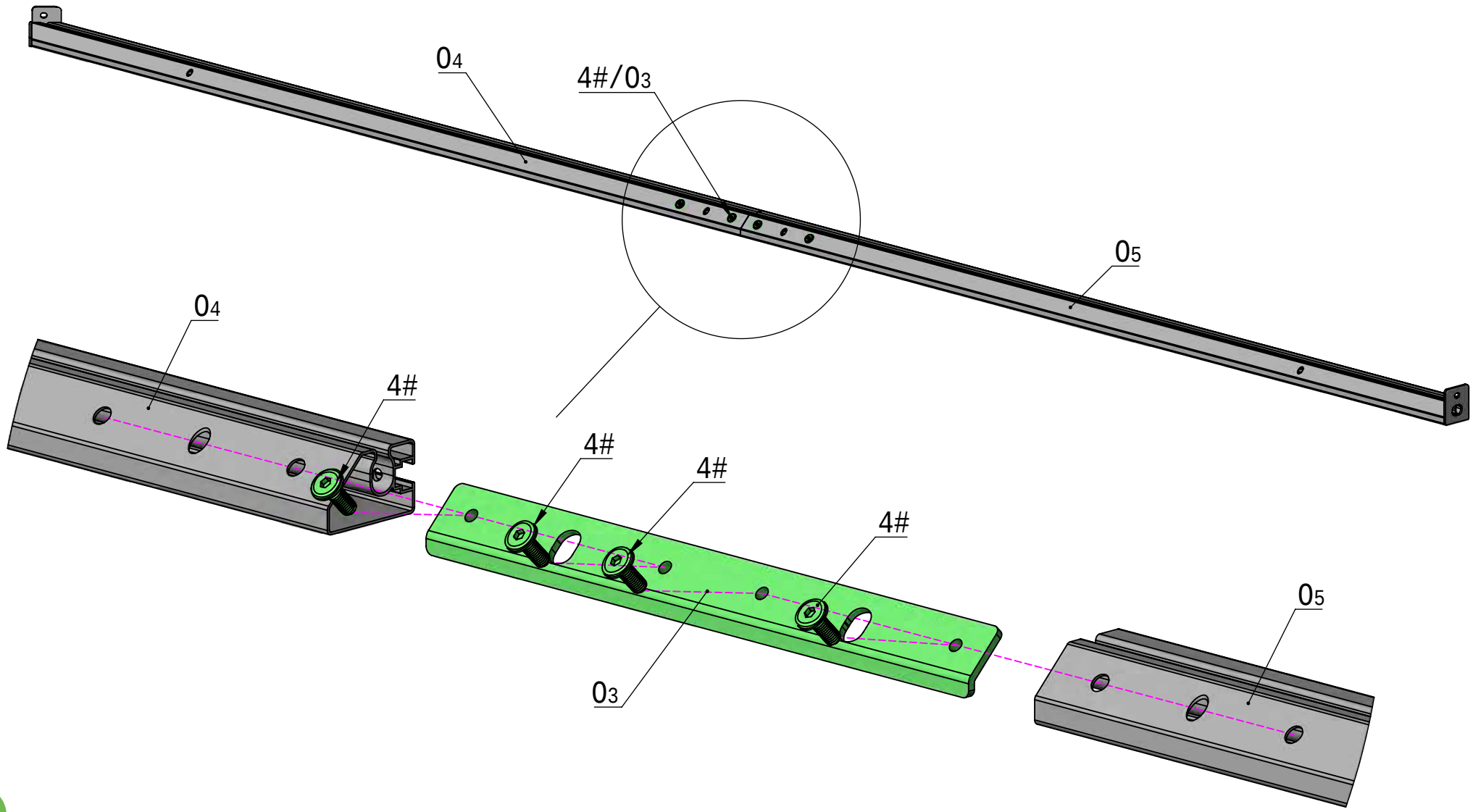

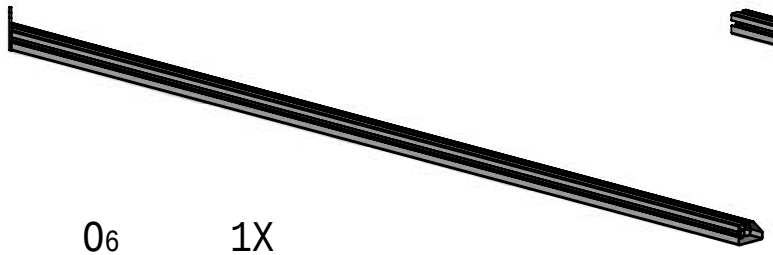

06 1X

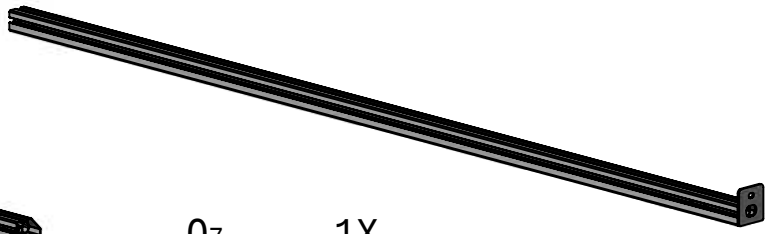

07 1X



24# 6X

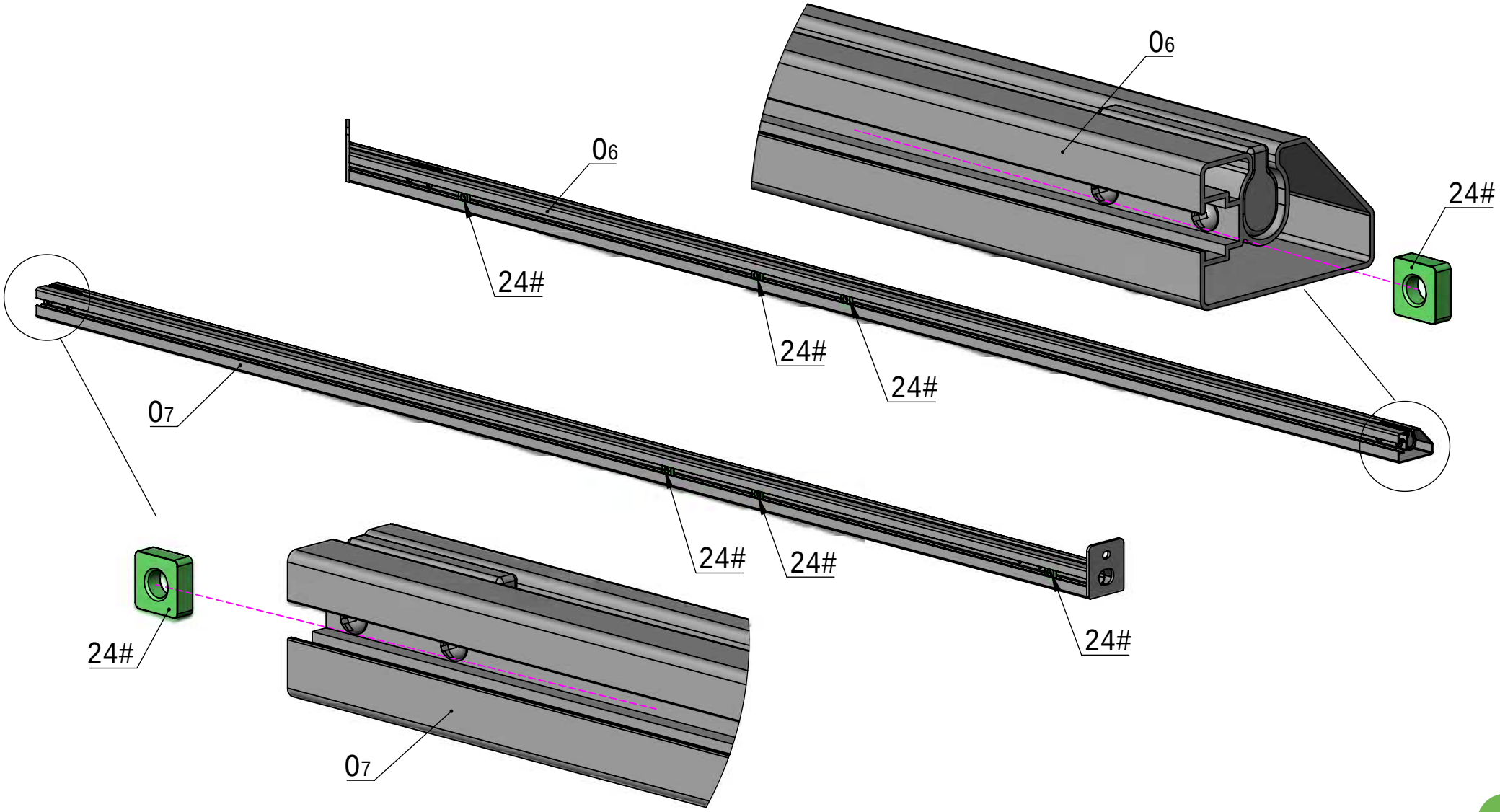

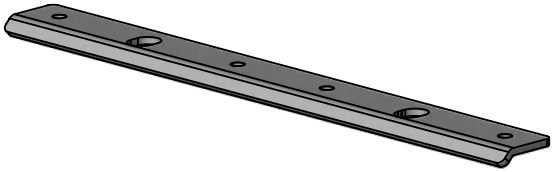

03 1X

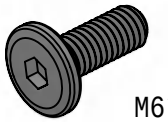

4# 4X

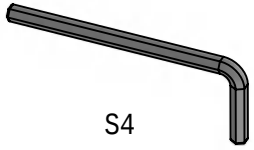

16# 1X

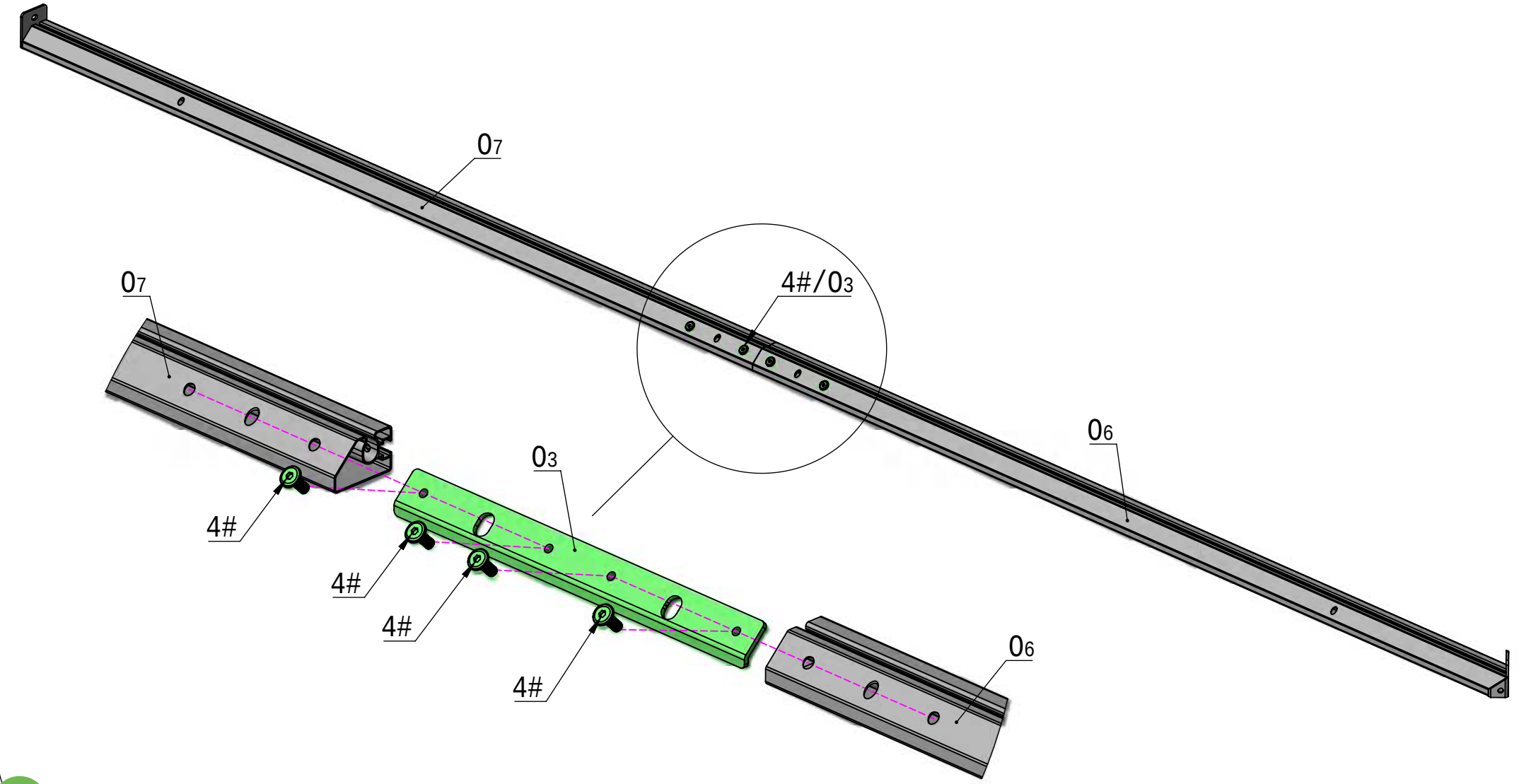



4# 2X

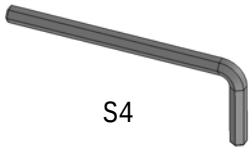

16# 1X

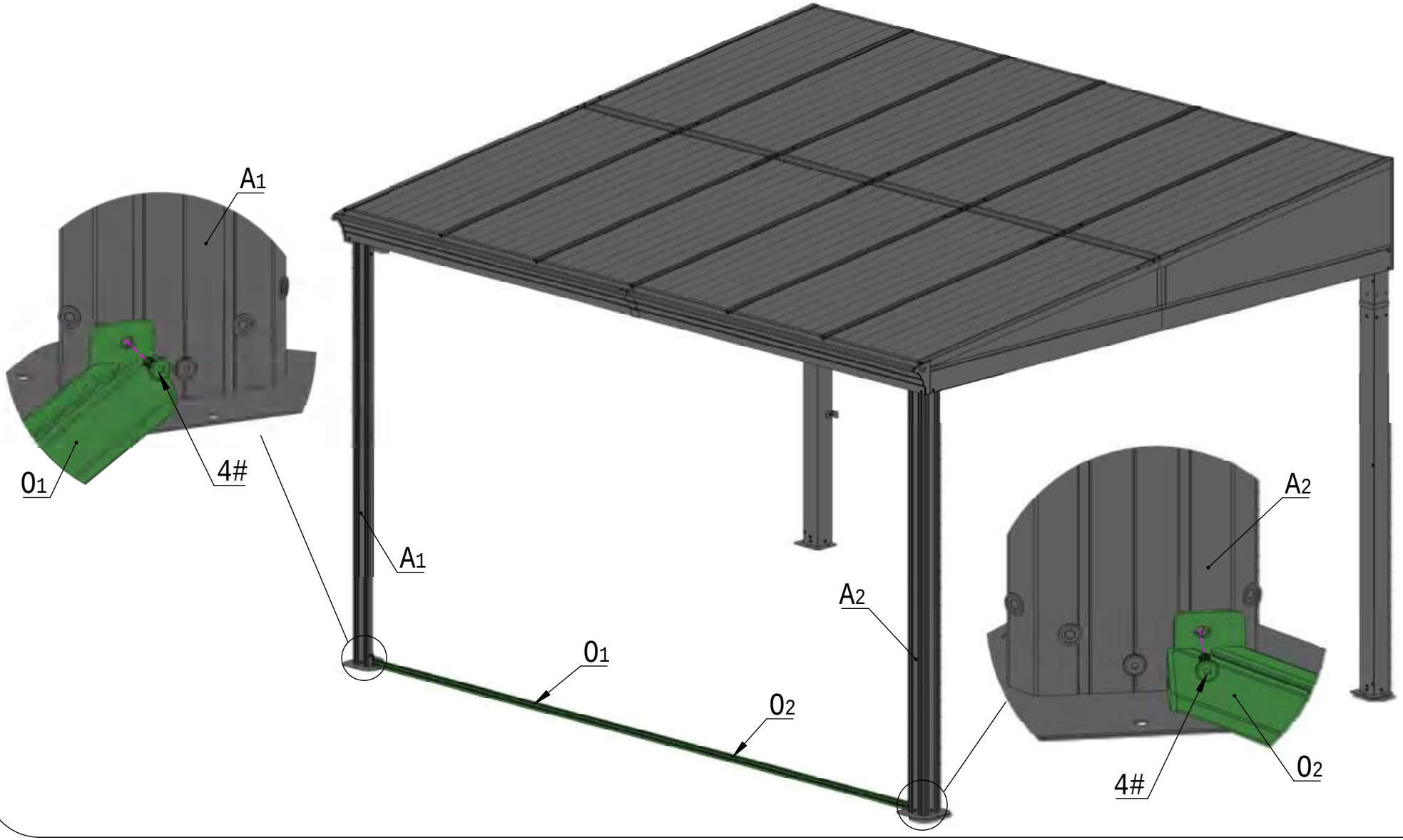

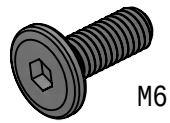

4# 4X

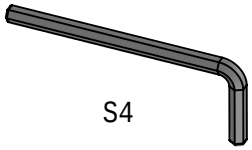

16# 1X

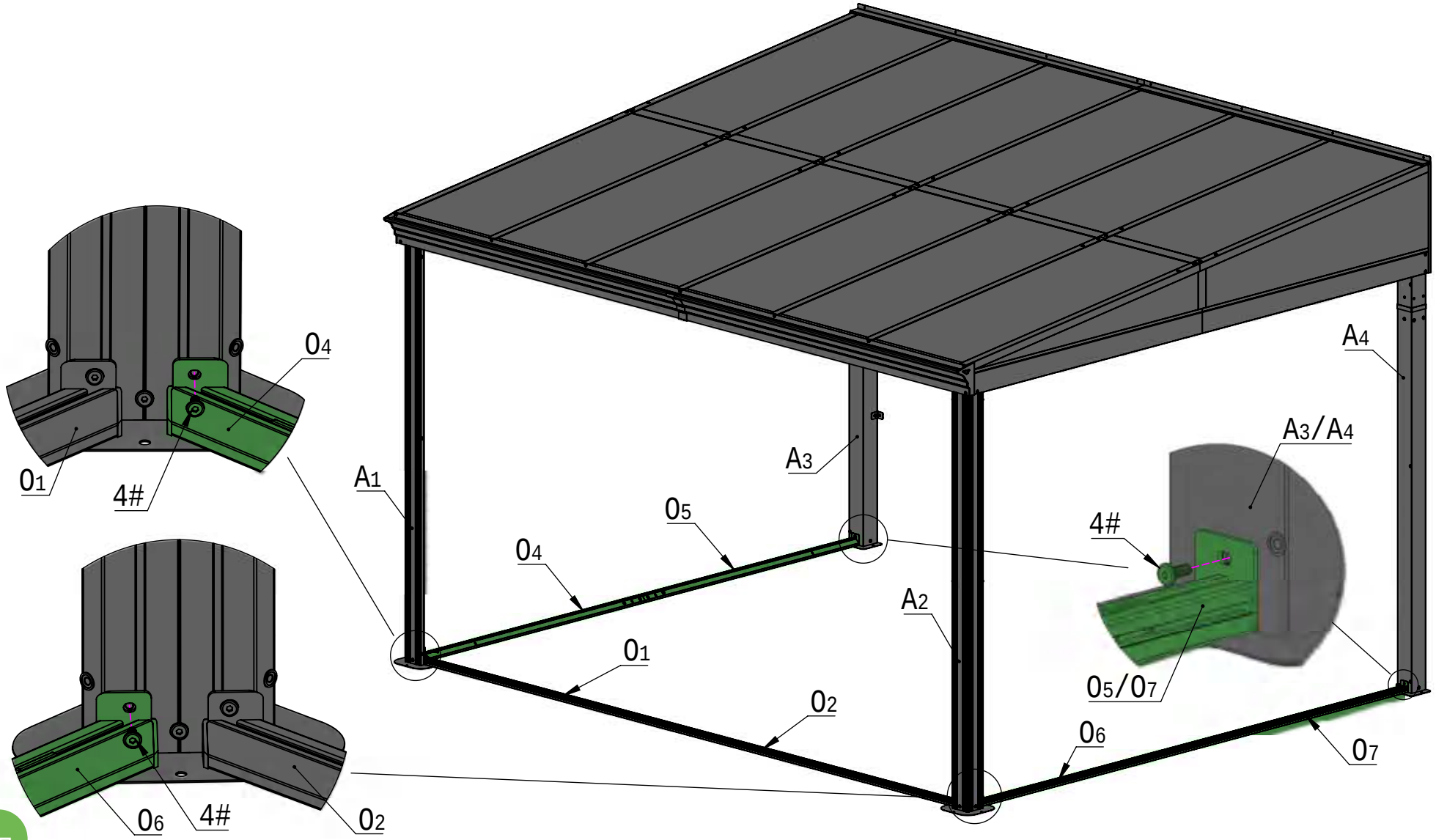

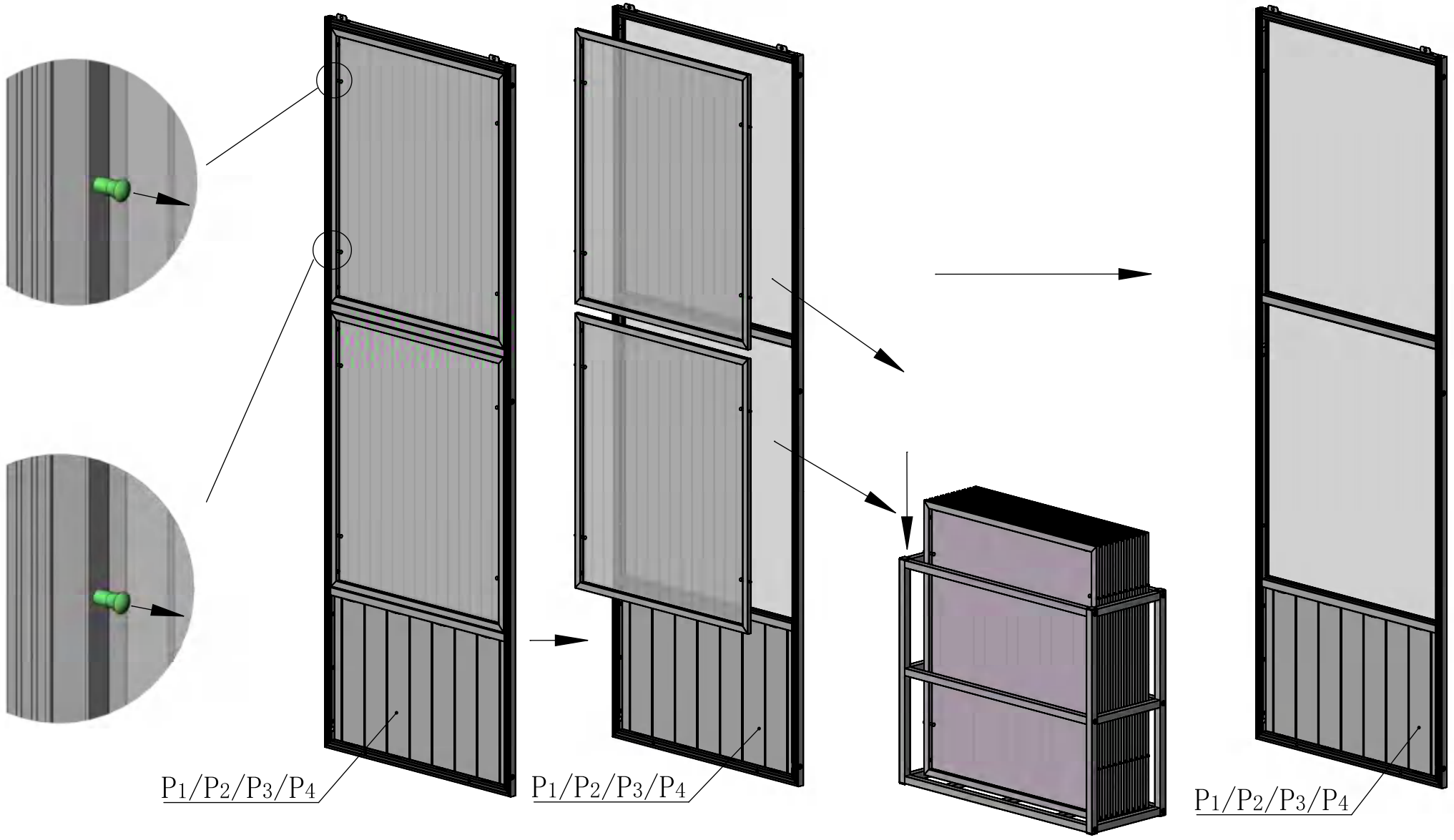
P1/P2/P3/P4
P1/P2/P3/P4
P1/P2/P3/P4

Inside View

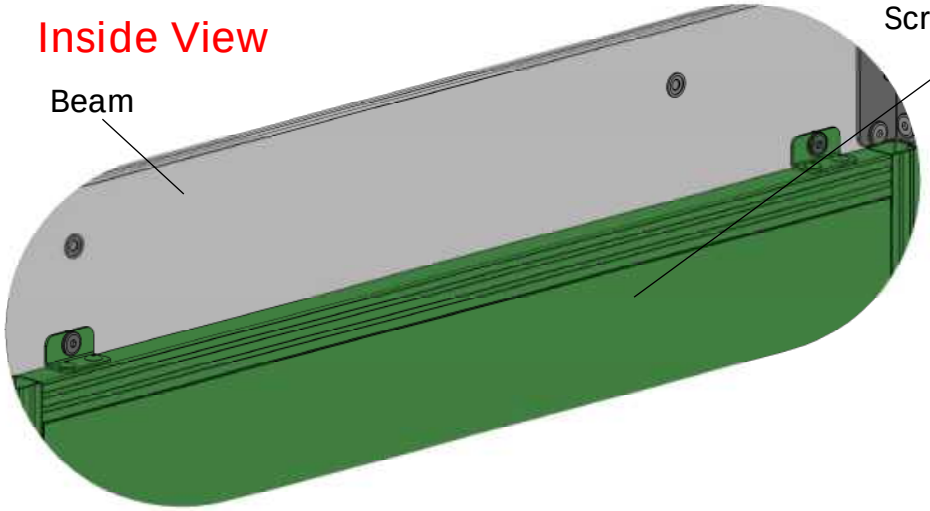
Beam
Screen Panel

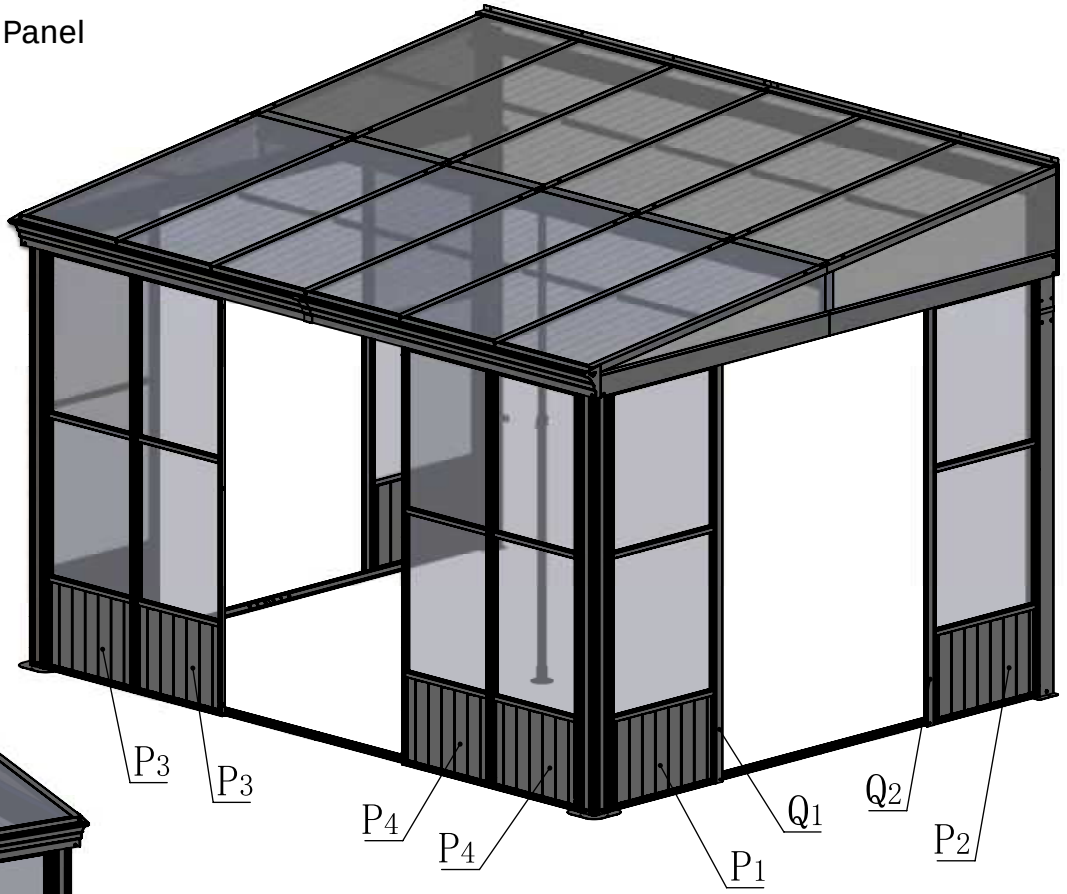
P3
P3
P4
P4
Q1
Q2
P1
P2

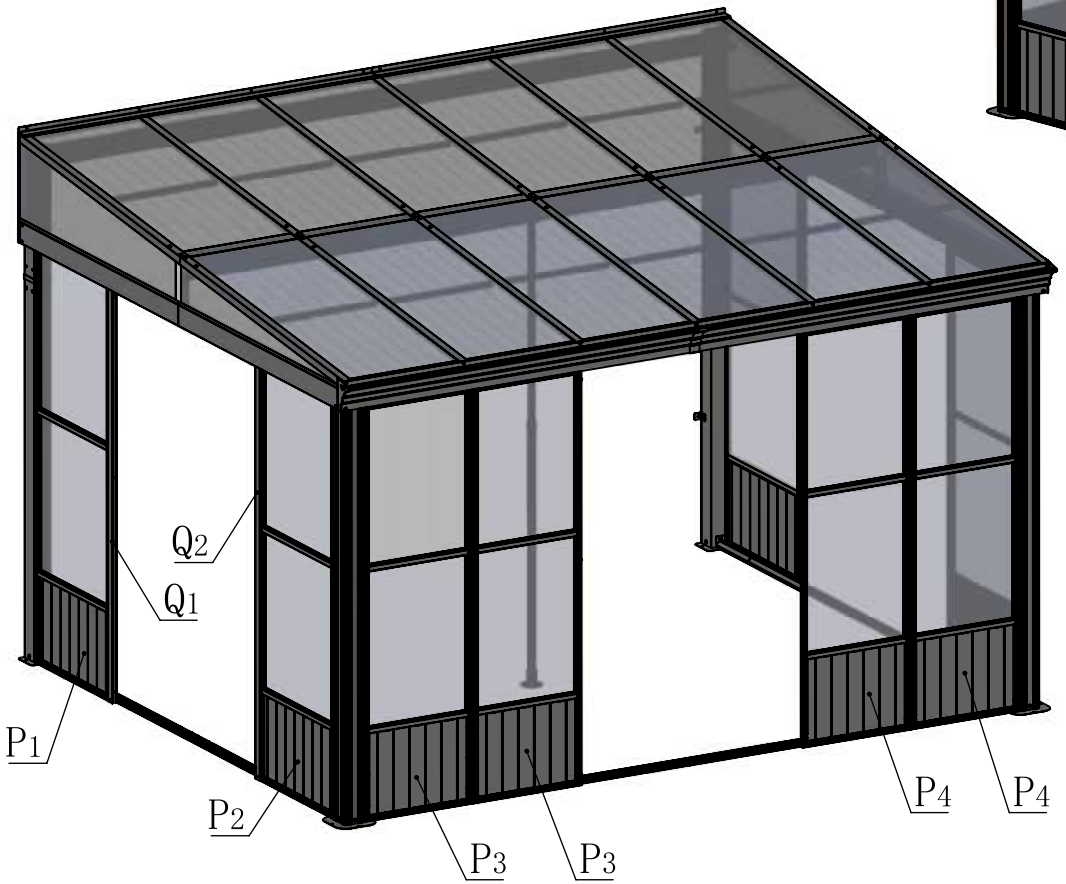
Q2
Q1
P1
P2
P3
P3
P4
P4

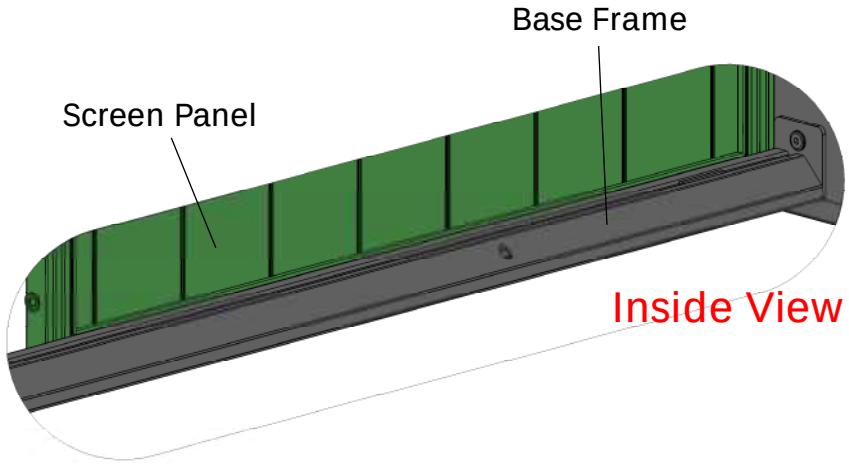
Base Frame
Screen Panel
Inside View

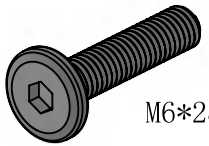

5# 2X

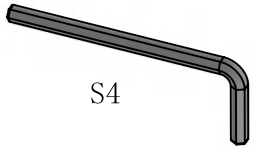

16# 1X

Use 2 bolts #5 to secure the wall panel to the base frame #O1, correspond and position the screws #5 with the square nuts #24 inside the track.

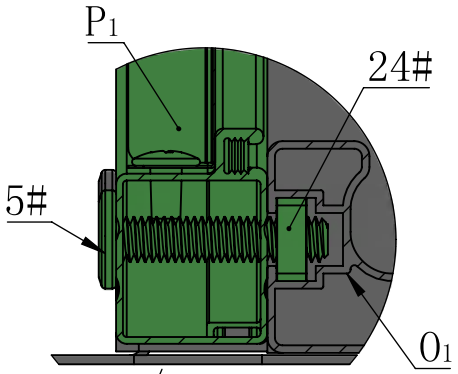

Section View

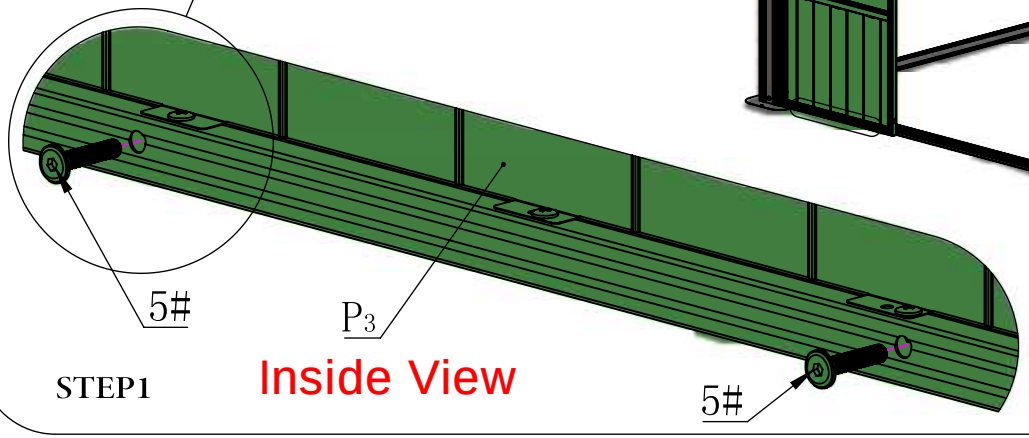

Inside View

STEP1

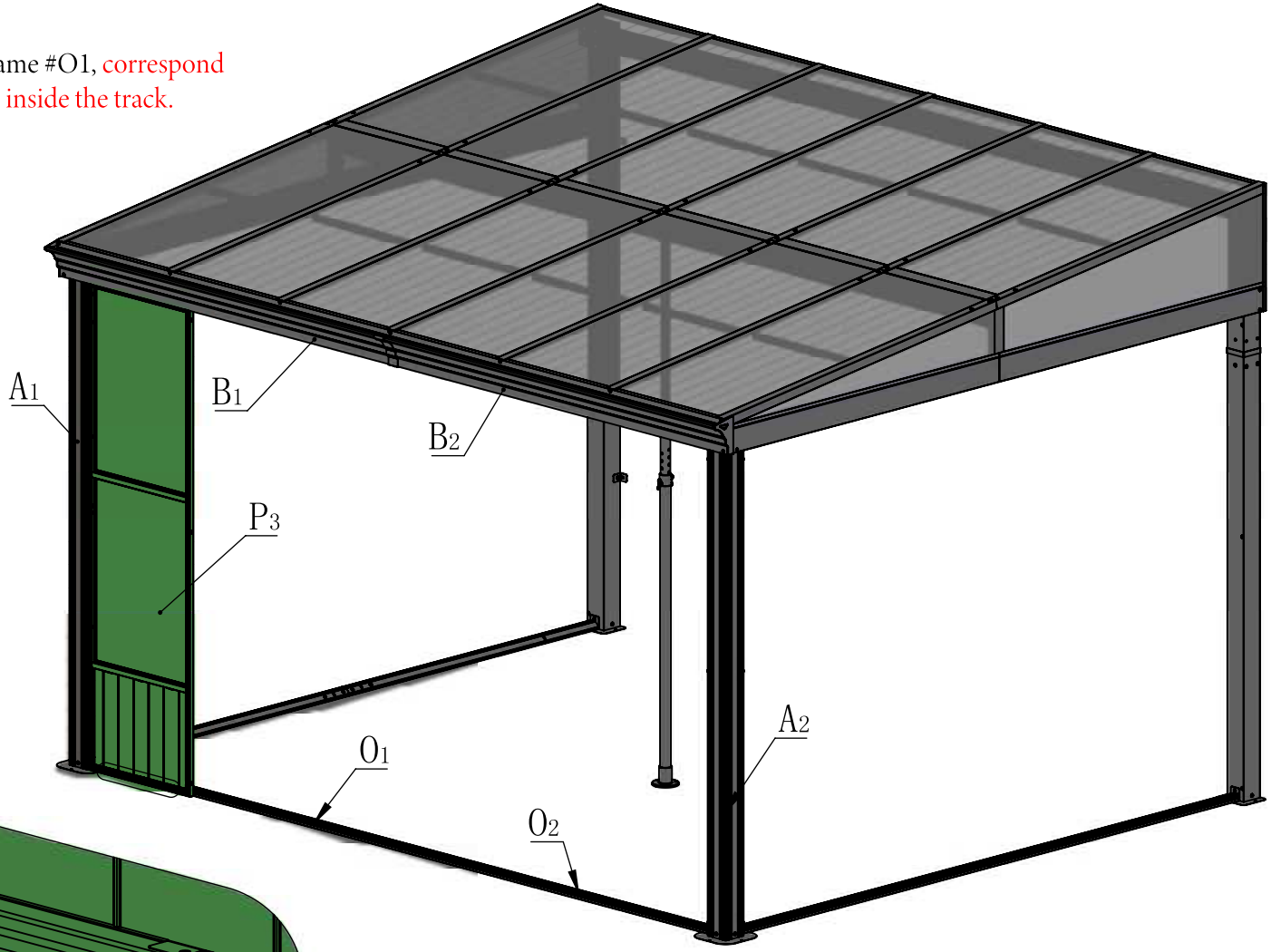

Note: Assemble according to the sequence of steps. Tighten each screen after all screws are positioned. (Align the holes, tighten screw #5 to metal square nuts #24 first)



M6*30

19# 3X



20# 3X



S5

25# 1X

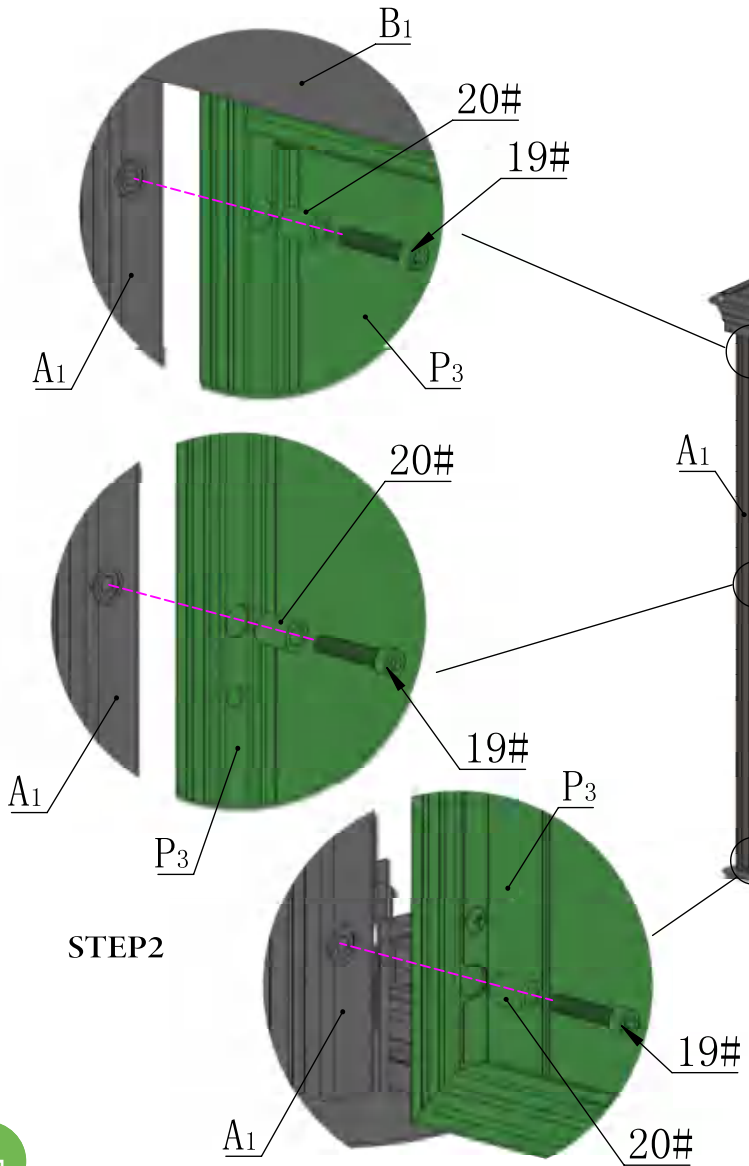

STEP2

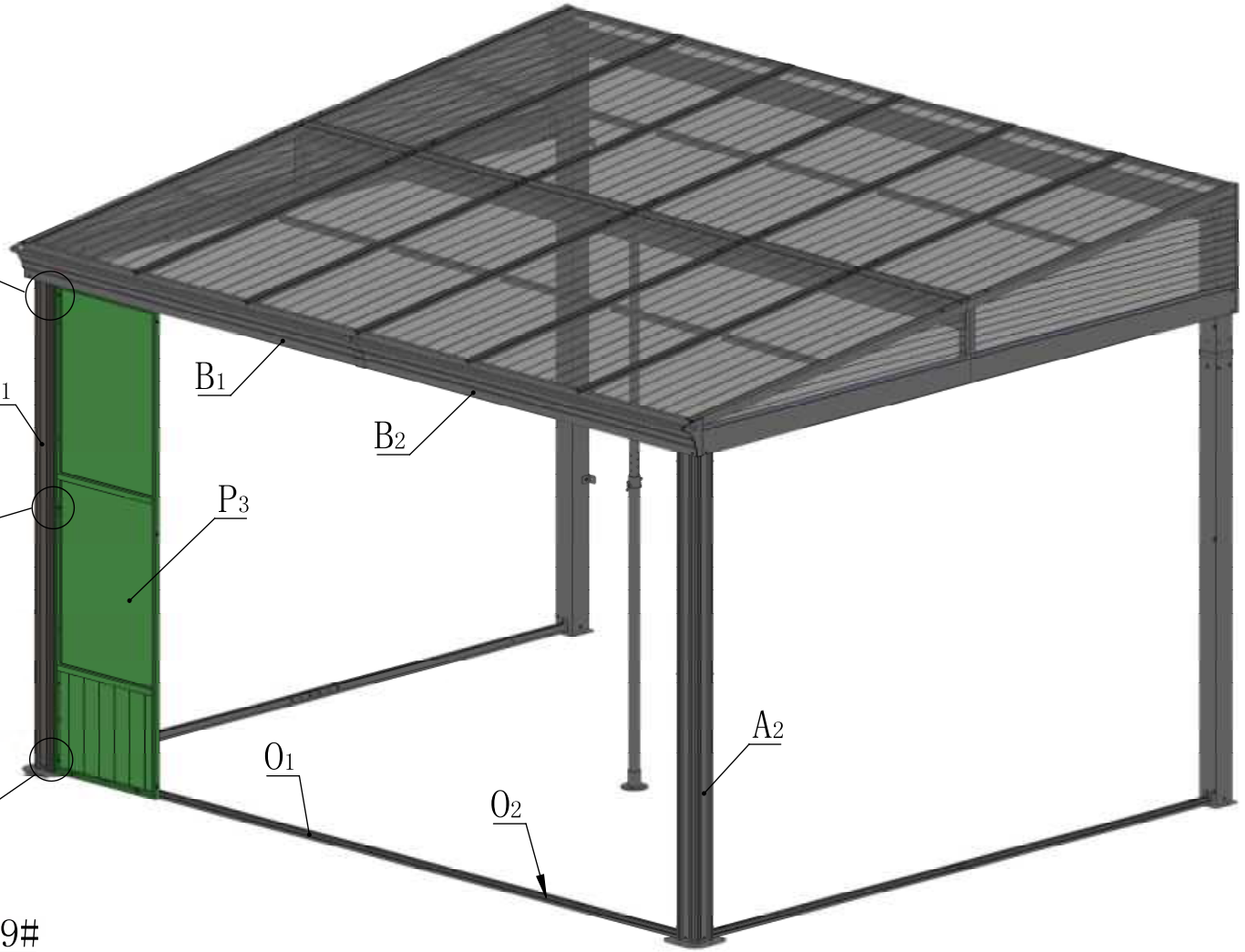

Note: Assemble according to the sequence of steps. Tighten each screen after all screws are positioned. (Align the holes, tighten screw 5# to metal square nuts 24# first.)

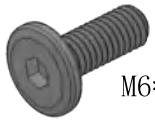

4# 2X



16# 1X

STEP3

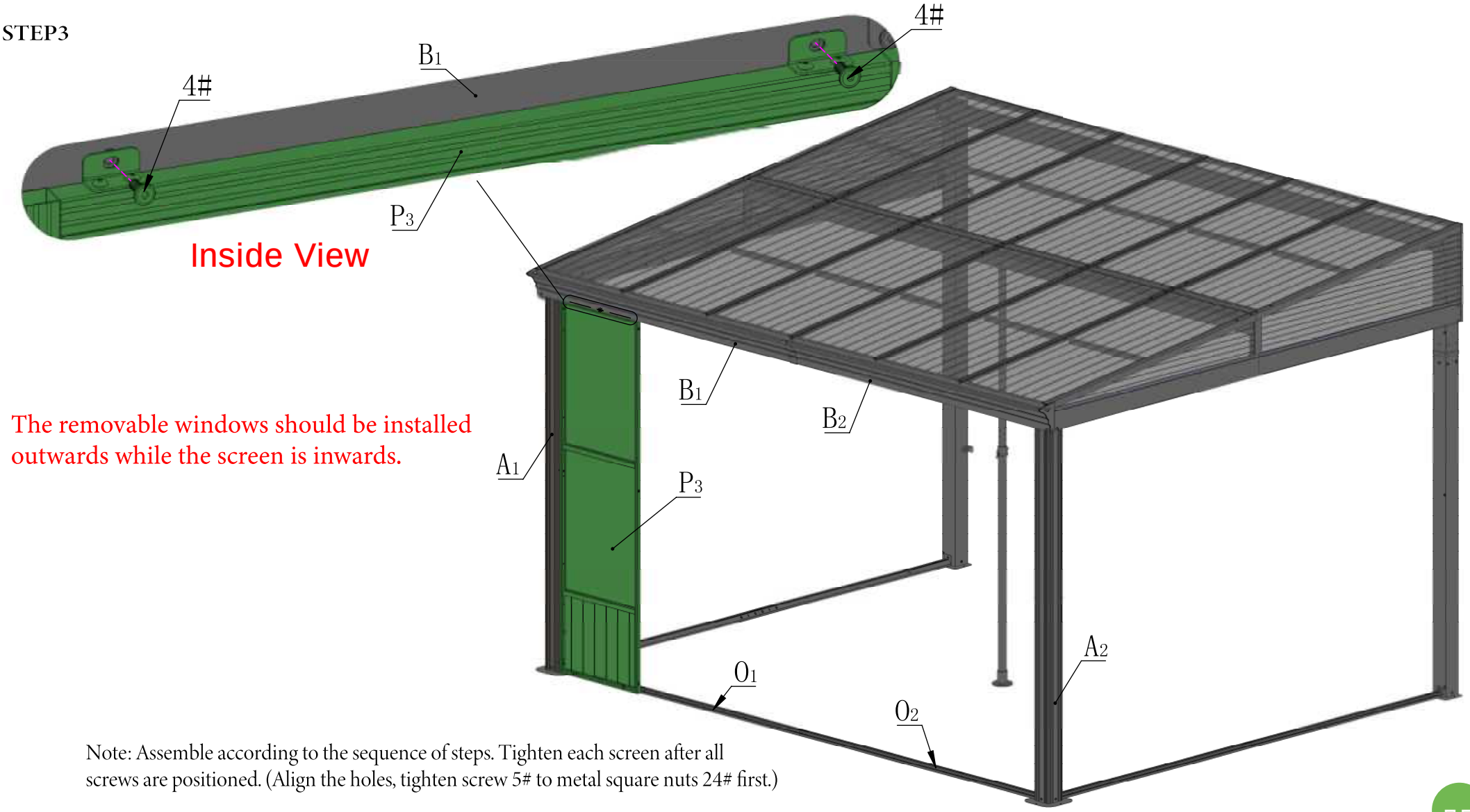

Note: Assemble according to the sequence of steps. Tighten each screen after all screws are positioned. (Align the holes, tighten screw 5# to metal square nuts 24# first.)

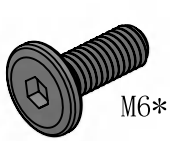

4# 2X

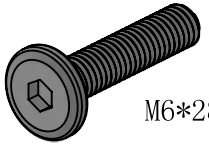

5# 2X

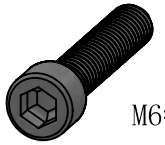

19# 3X

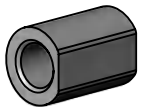

20# 3X

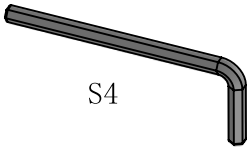

16# 1X

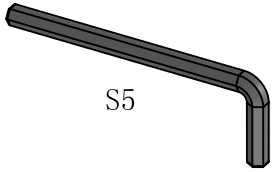

25# 1X

STEP3

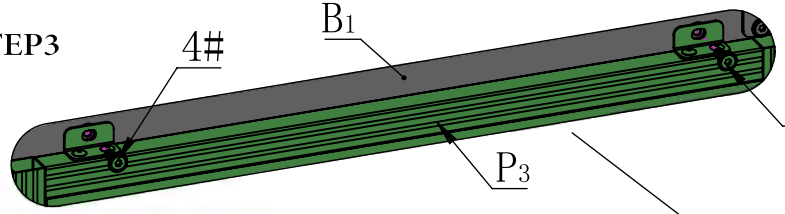

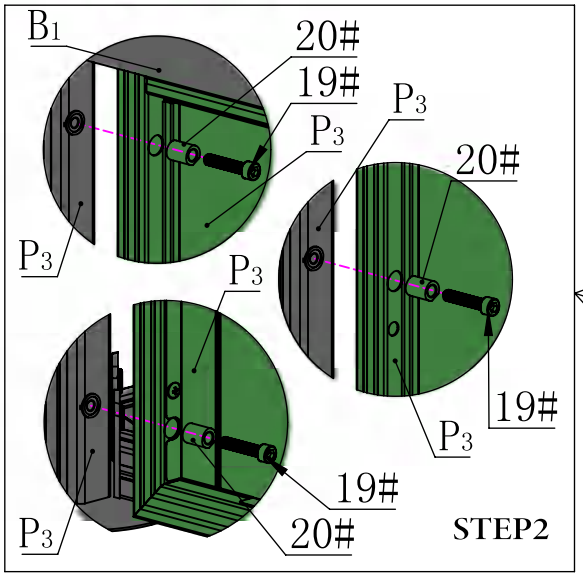

STEP2

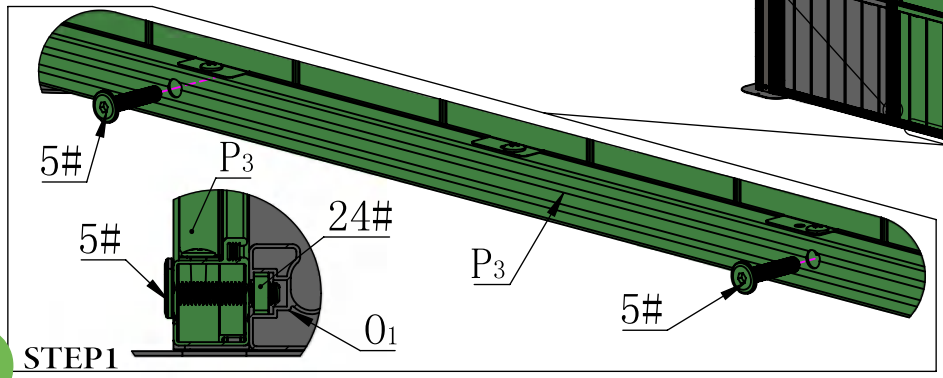

STEP1

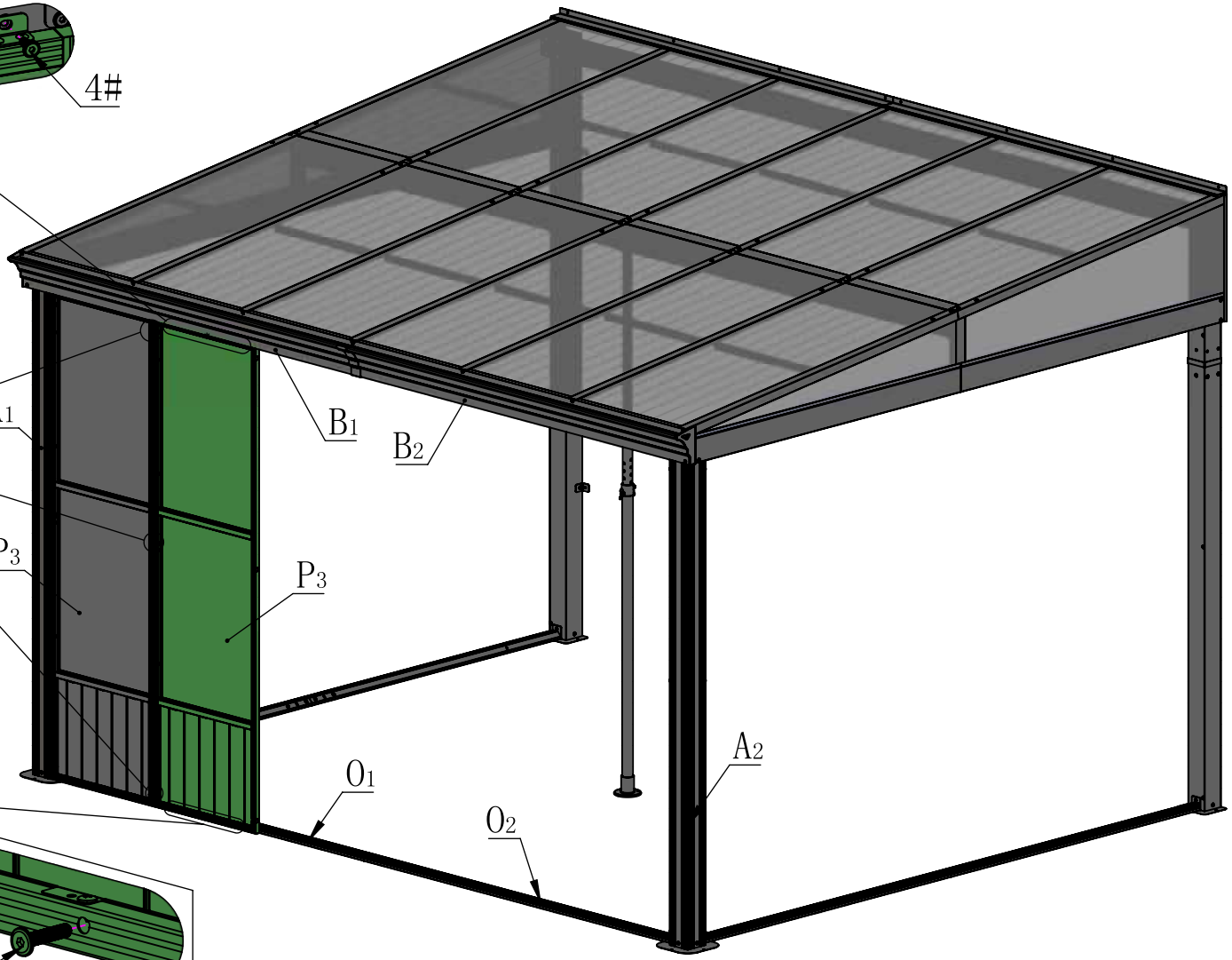

Note: Assemble according to the sequence of steps. Tighten each screen after all screws are positioned. (Align the holes, tighten screw 5# to metal square nuts 24# first.)

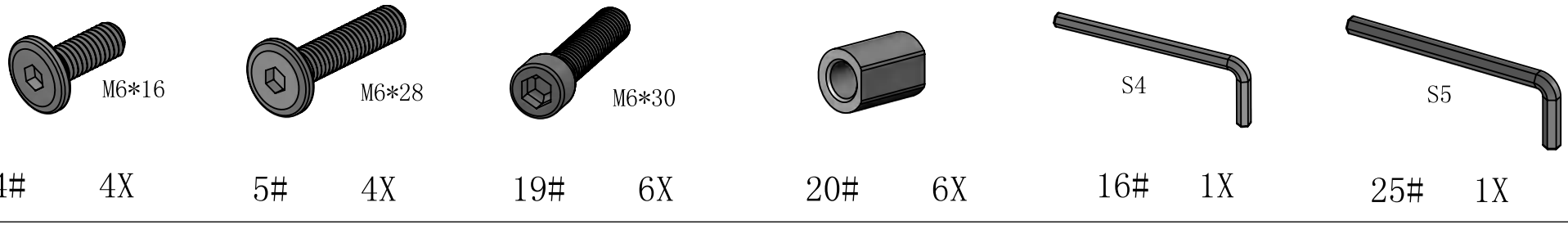

4#	4X	5#	4X	19#	6X	20#	6X	16#	1X	25#	1X

STEP3

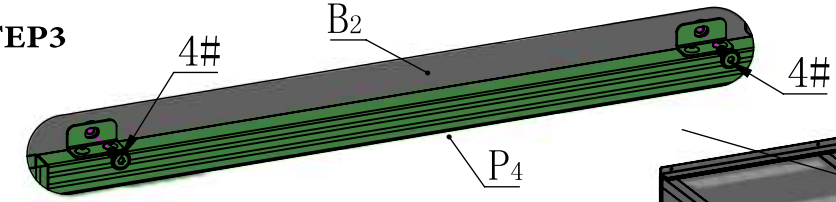

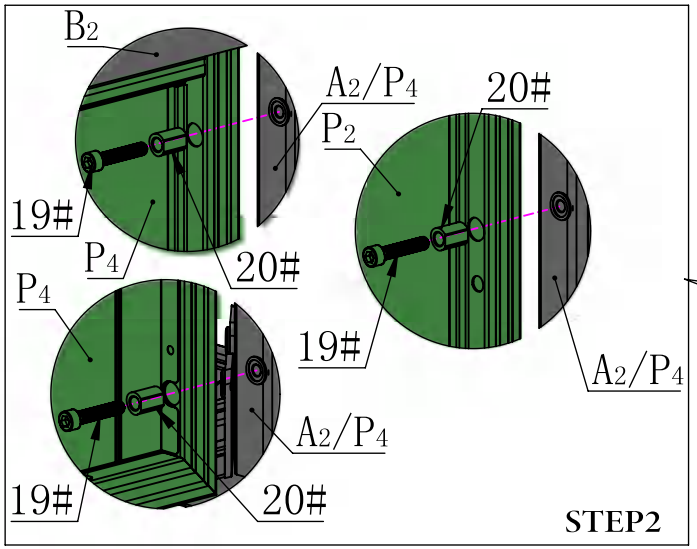

STEP2

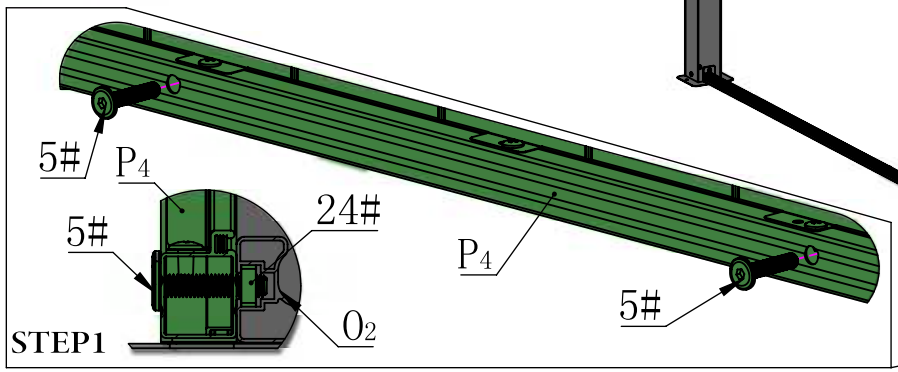

STEP1

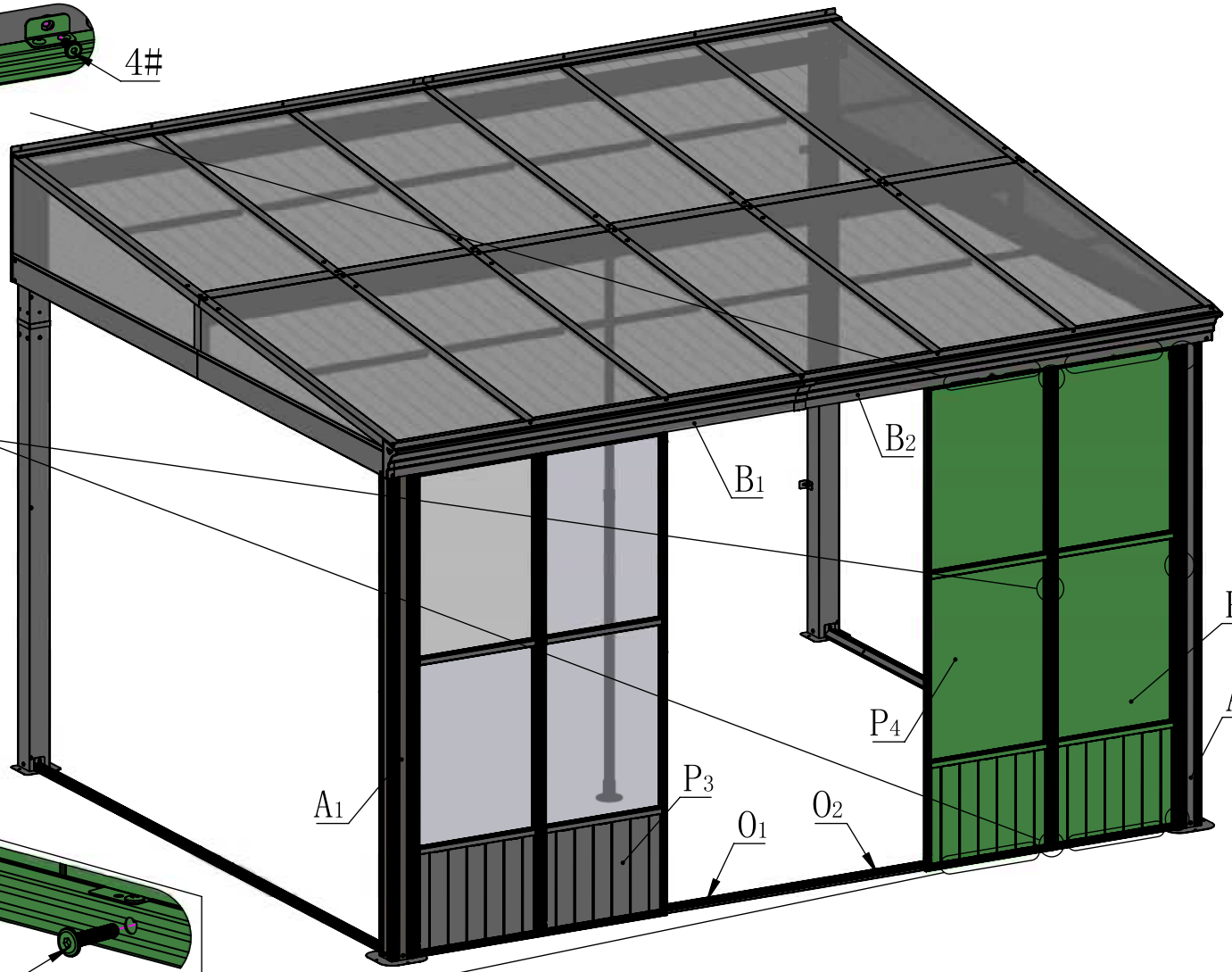

Note: Assemble according to the sequence of steps. Tighten each screen after all screws are positioned. (Align the holes, tighten screw 5# to metal square nuts 24# first.)

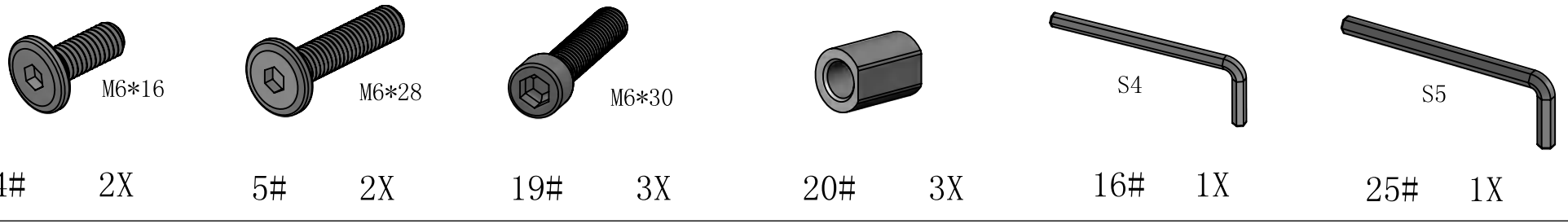

4#	2X	5#	2X	19#	3X	20#	3X	16#	1X	25#	1X

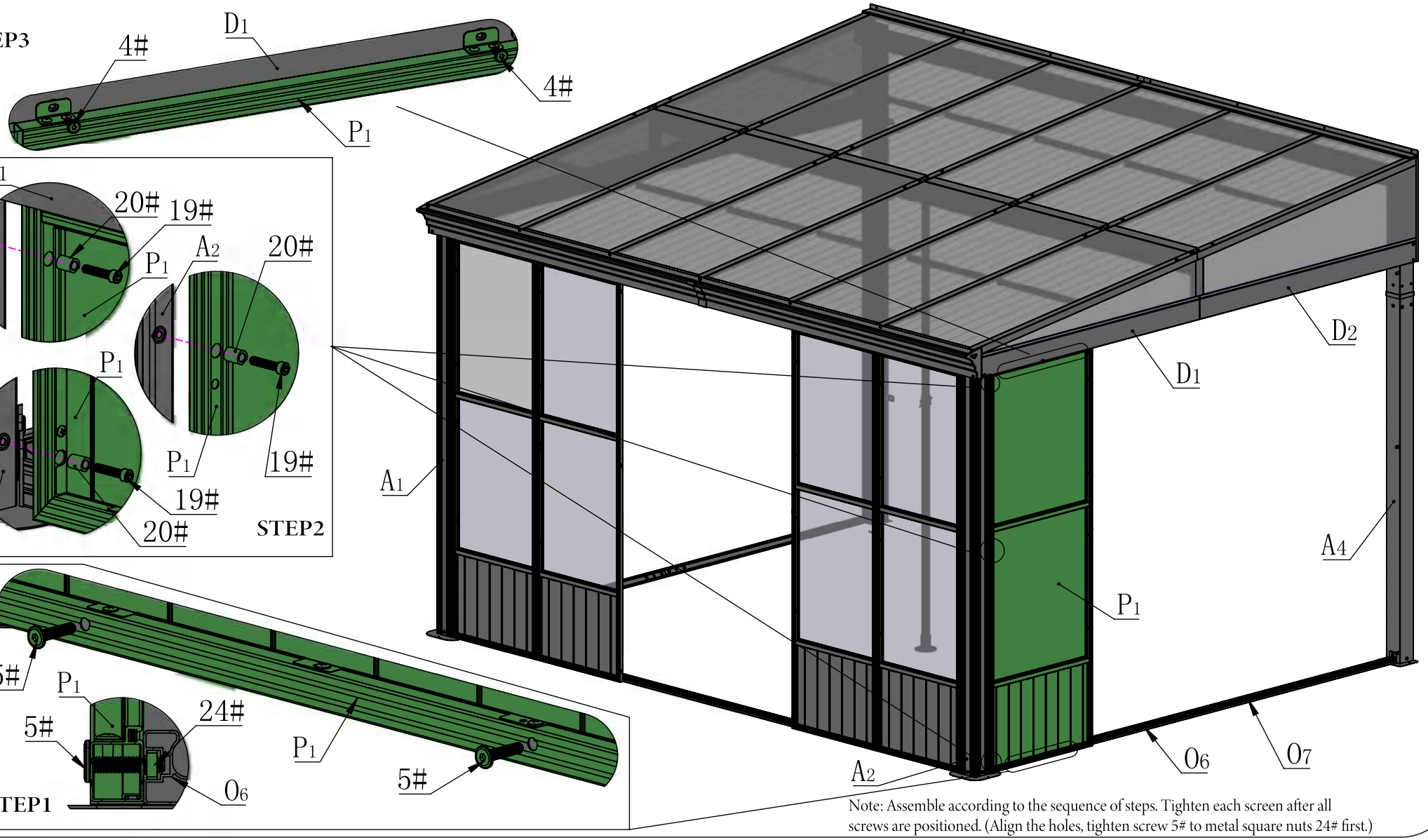

Note: Assemble according to the sequence of steps. Tighten each screen after all screws are positioned. (Align the holes, tighten screw 5# to metal square nuts 24# first.)

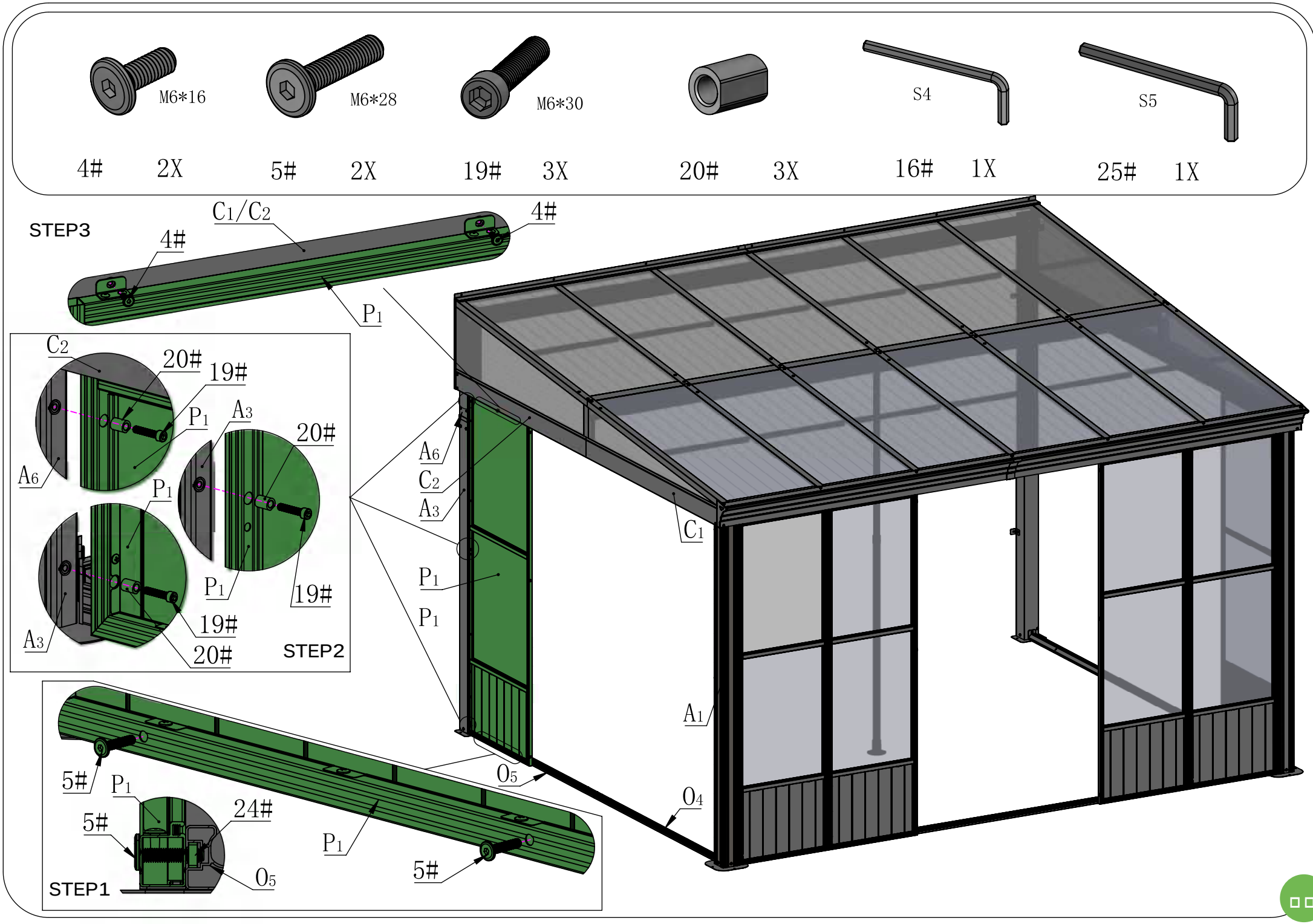
M6*16
M6*28
M6*30
S4
S5
4# 2X
5# 2X
19# 3X
20# 3X
16# 1X
25# 1X
STEP3
C1/C2
4#
4#
P1
C2
20#
19#
P1
A3
20#
A6
P1
P1
19#
19#
A3
20#
STEP2
5#
P1
5#
24#
O5
P1
5#
STEP1
A6
C2
A3
P1
P1
C1
A1
O5
O4

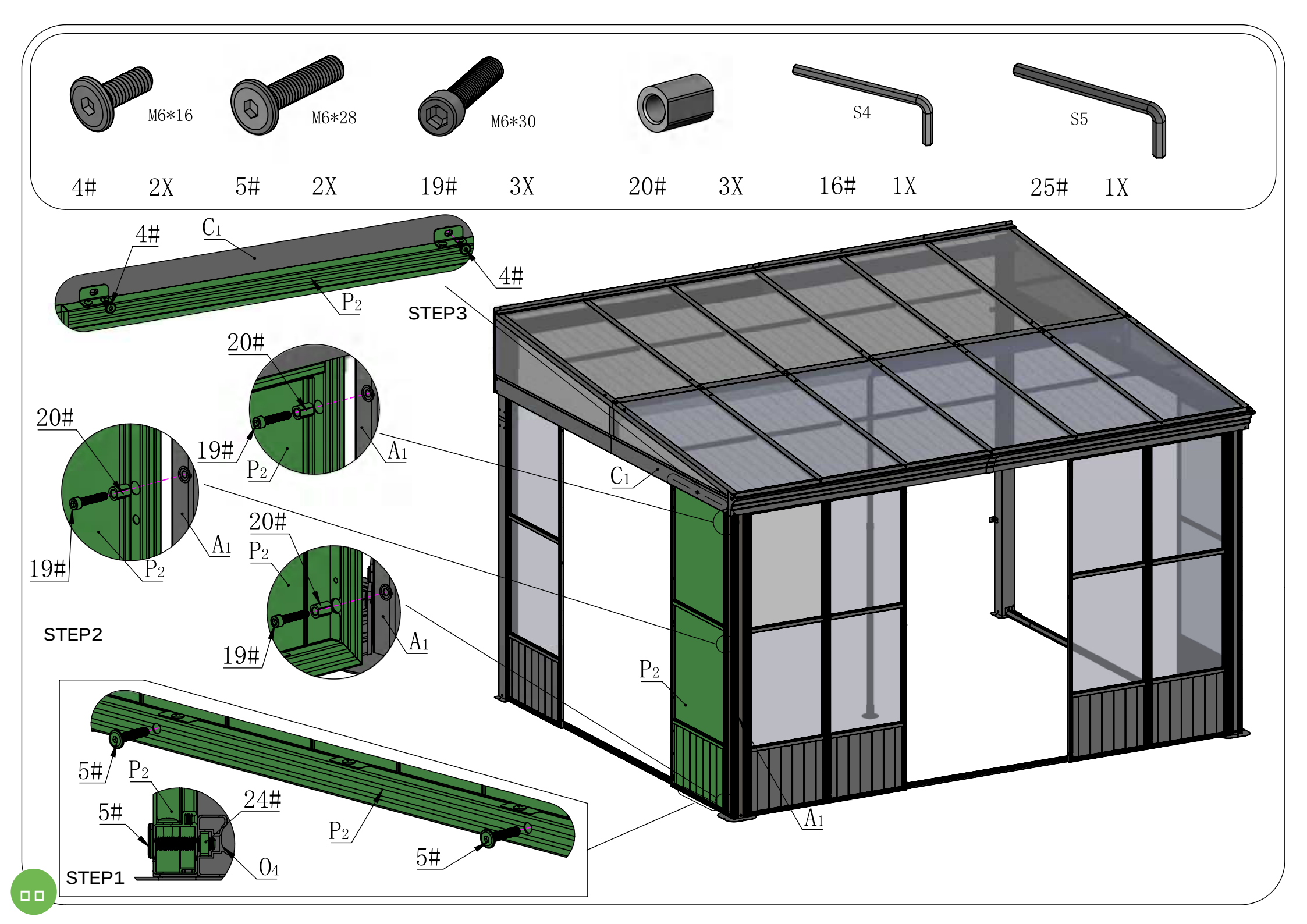
M6*16
M6*28
M6*30
S4
S5
4# 2X
5# 2X
19# 3X
20# 3X
16# 1X
25# 1X
4#
C1
P2
4#
STEP3
20#
19#
P2
A1
20#
19#
P2
A1
20#
P2
19#
A1
STEP2
C1
P2
A1
5#
P2
5#
24#
O4
P2
5#
STEP1

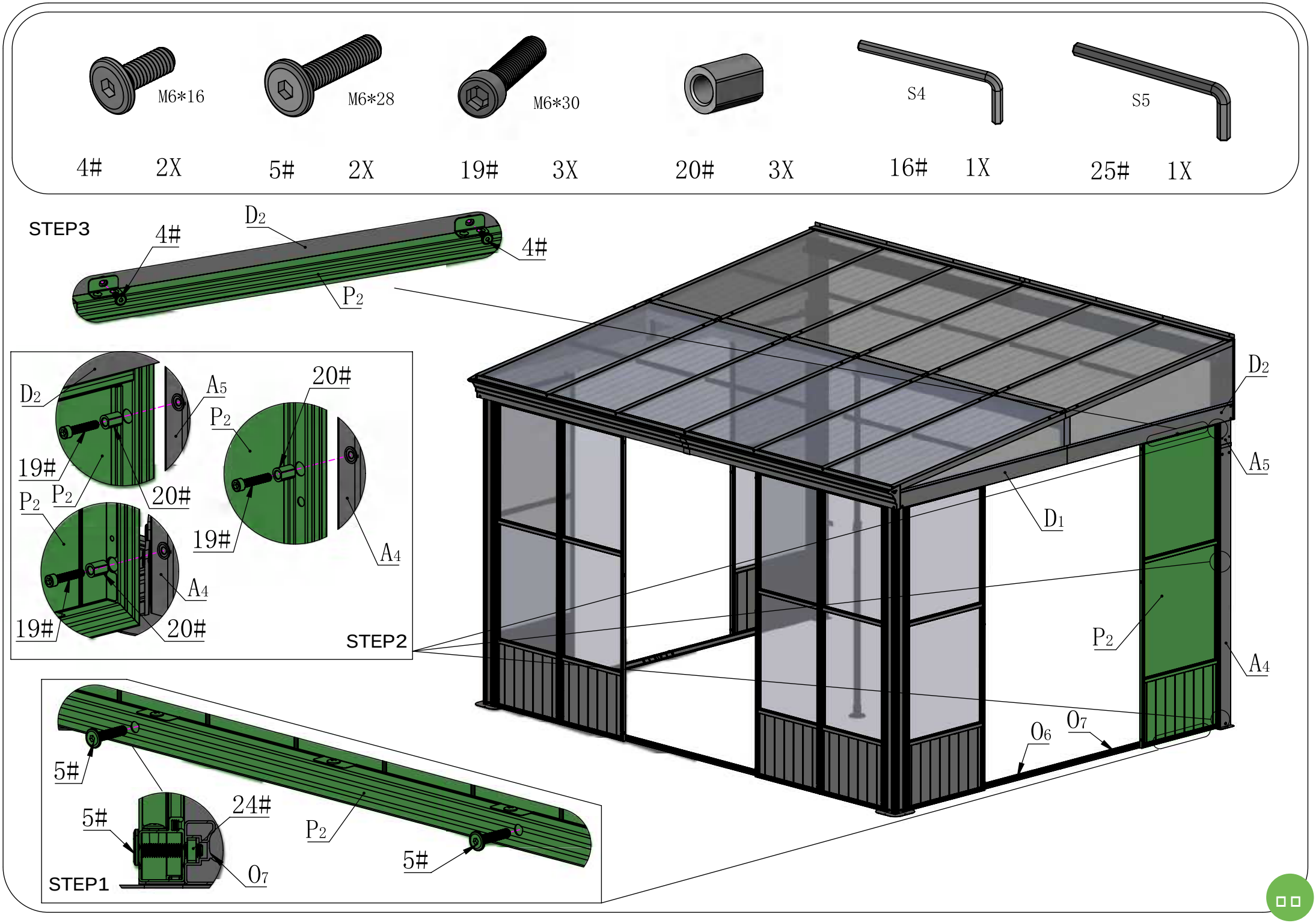
M6*16
M6*28
M6*30
S4
S5
4# 2X
5# 2X
19# 3X
20# 3X
16# 1X
25# 1X
STEP3
4#
D2
4#
P2
D2
A5
20#
P2
19#
P2
20#
P2
19#
A4
A4
19#
20#
STEP2
D2
A5
D1
P2
A4
O6
O7
5#
24#
P2
5#
5#
O7
STEP1

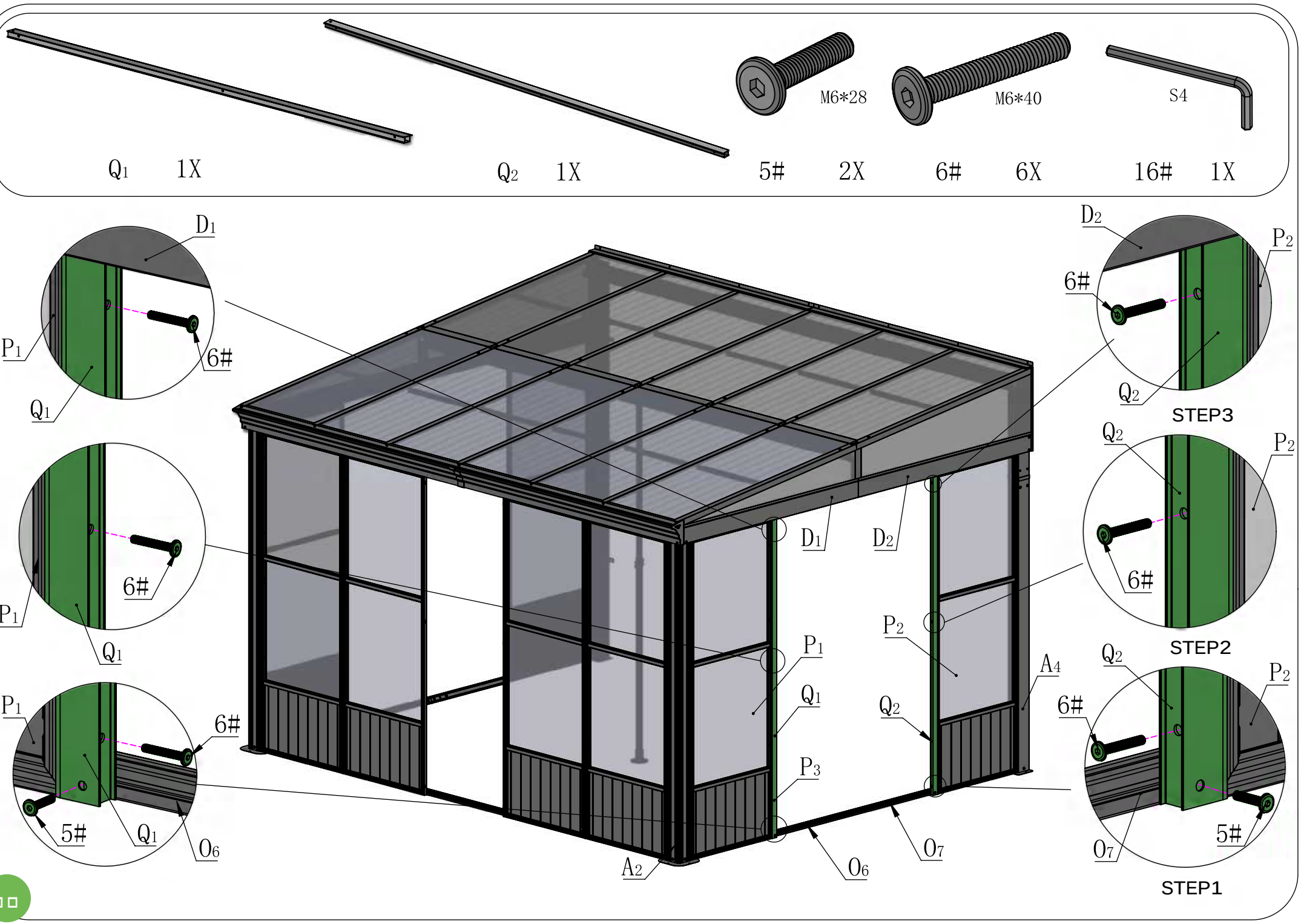
Q1 1X
Q2 1X
M6*28
5# 2X
M6*40
6# 6X
S4
16# 1X
D1
P1
6#
Q1
D2
P2
STEP3
STEP2
STEP1
A2
A4
P3
O6
O7
5#

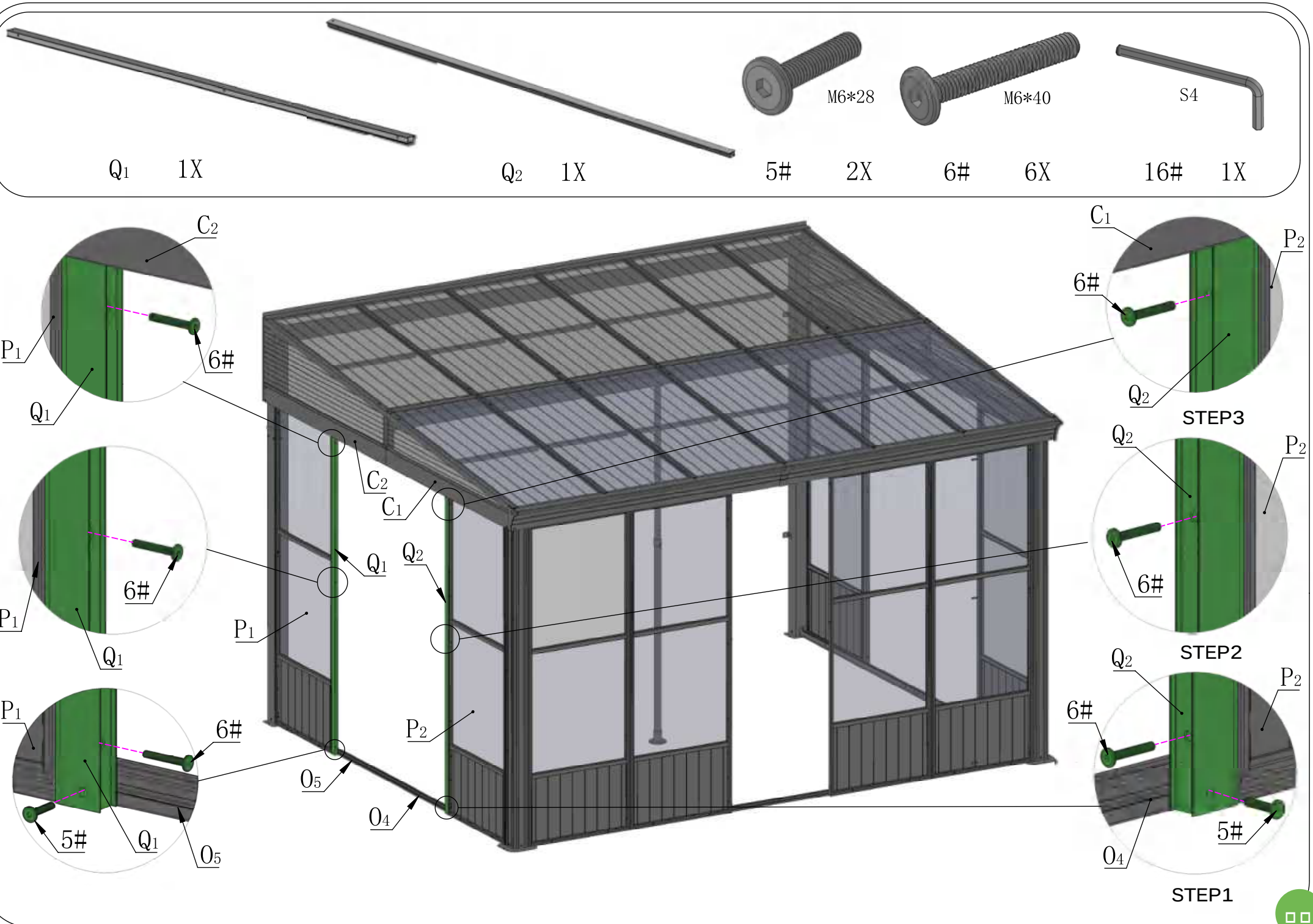
Q1 1X
Q2 1X
M6*28
5# 2X
M6*40
6# 6X
S4
16# 1X
C2
P1
6#
Q1
C1
P2
Q2
STEP3
STEP2
STEP1
O5
O4
5#



26# 6X

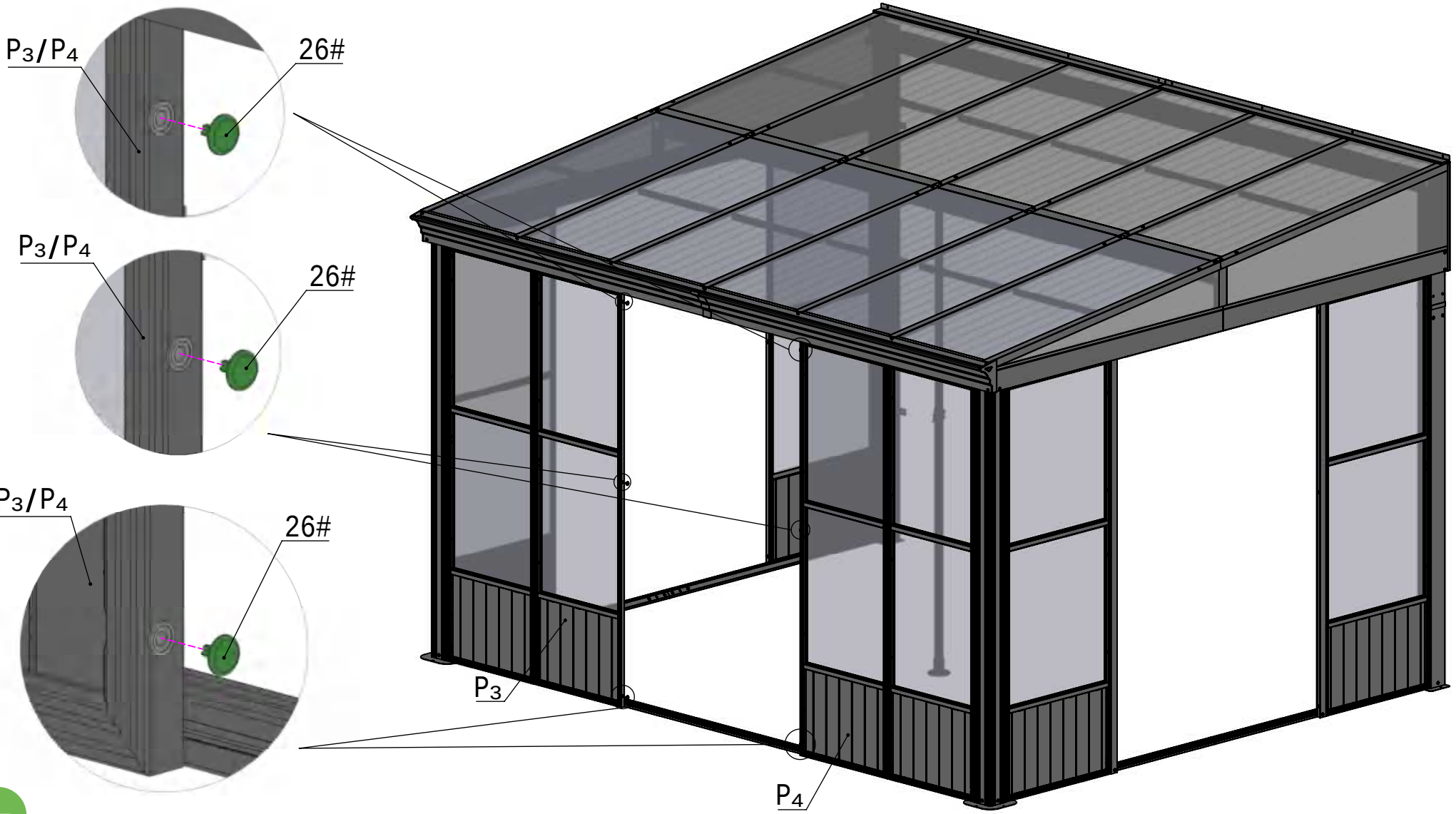

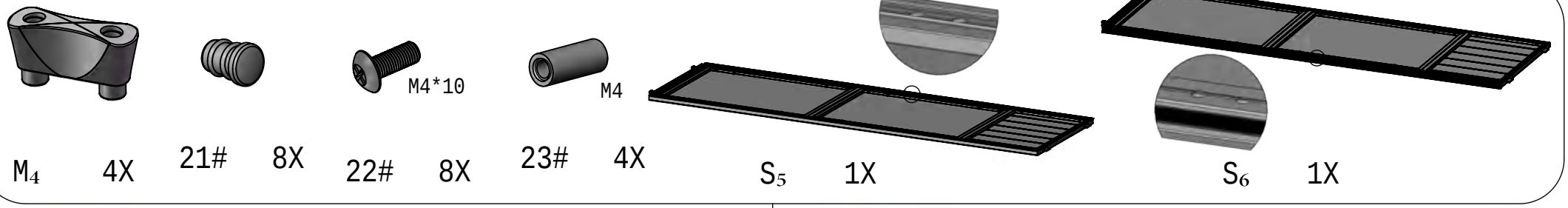
M4*10
M4
M4 4X
21# 8X
22# 8X
23# 4X
S5 1X
S6 1X

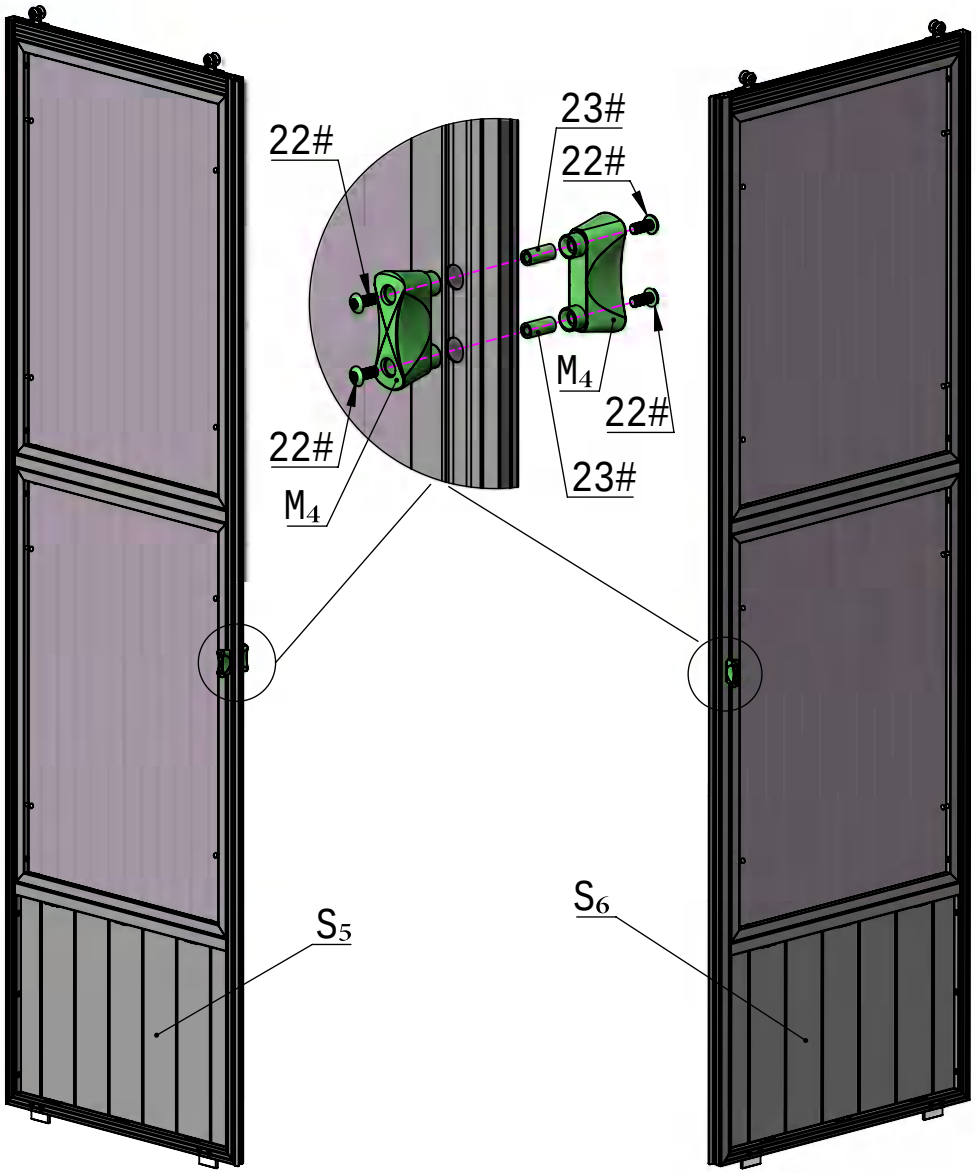
22#
23#
22#
M4
22#
22#
23#
S5
S6

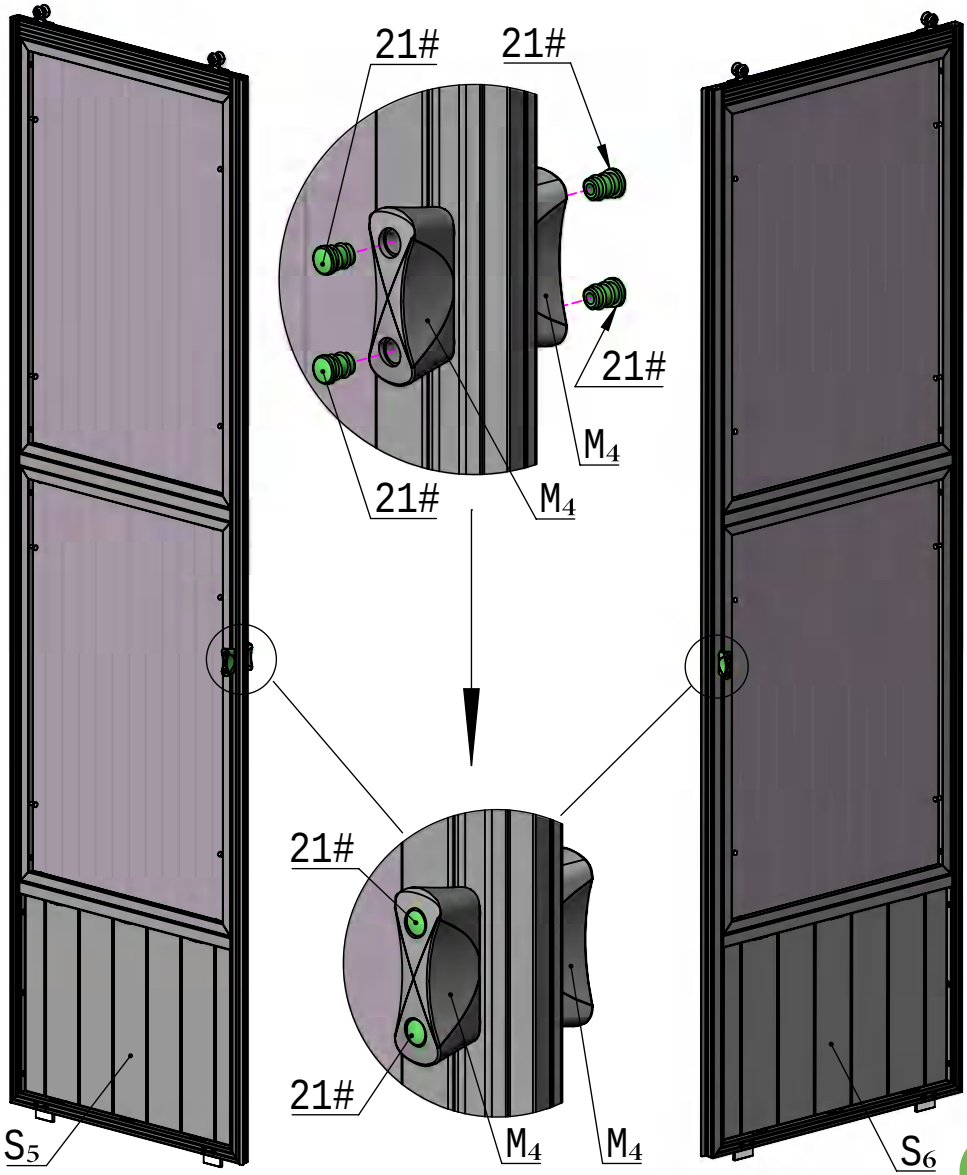
21#
21#
21#
M4
21#
M4
21#
21#
M4
M4
S5
S6

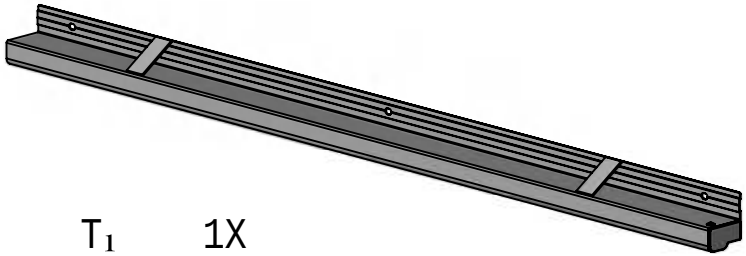

T_1 1X

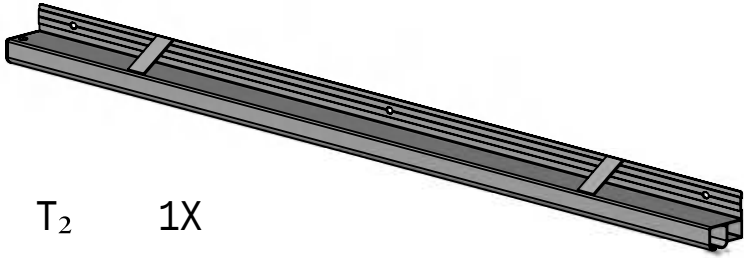

T_2 1X

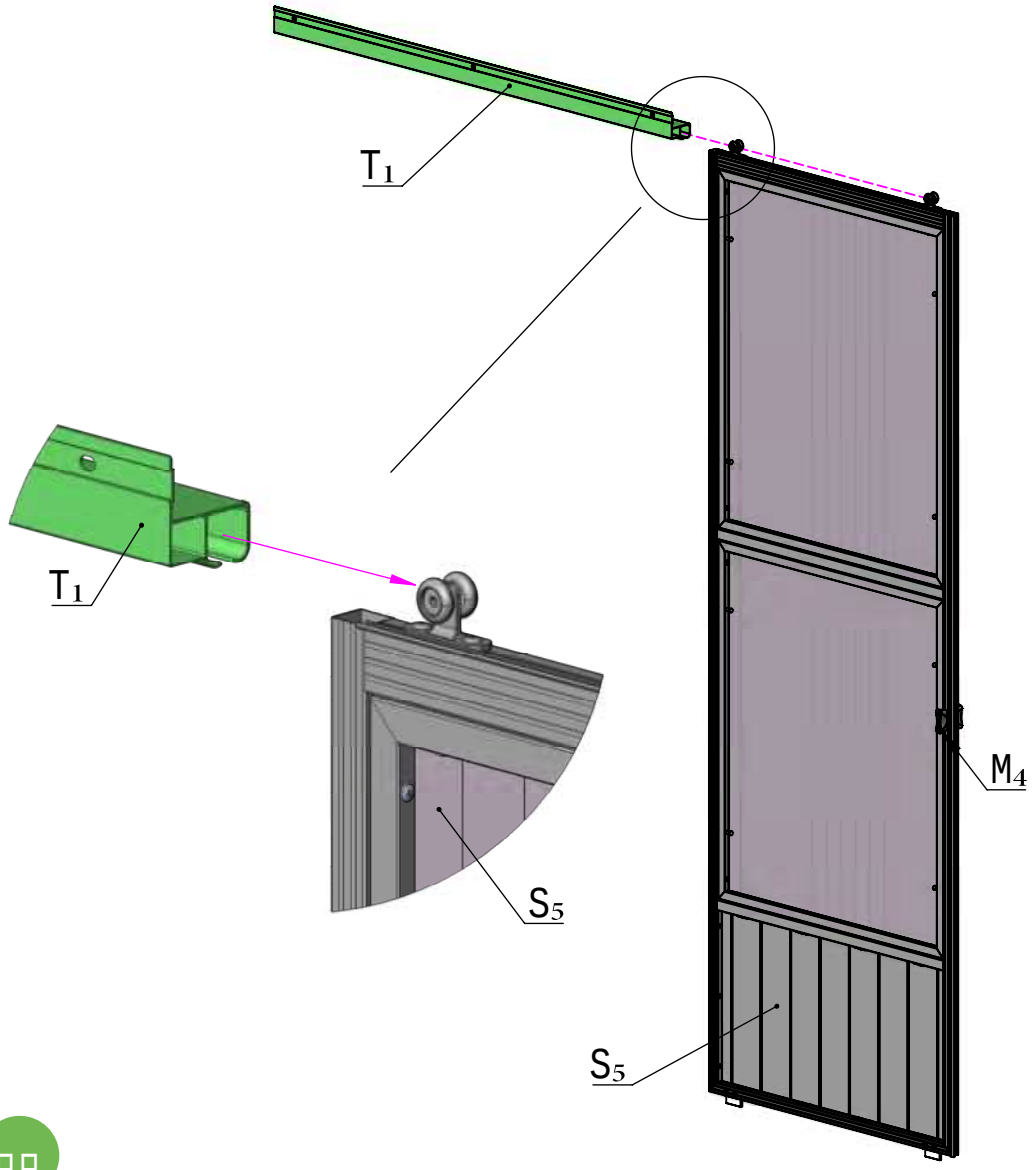

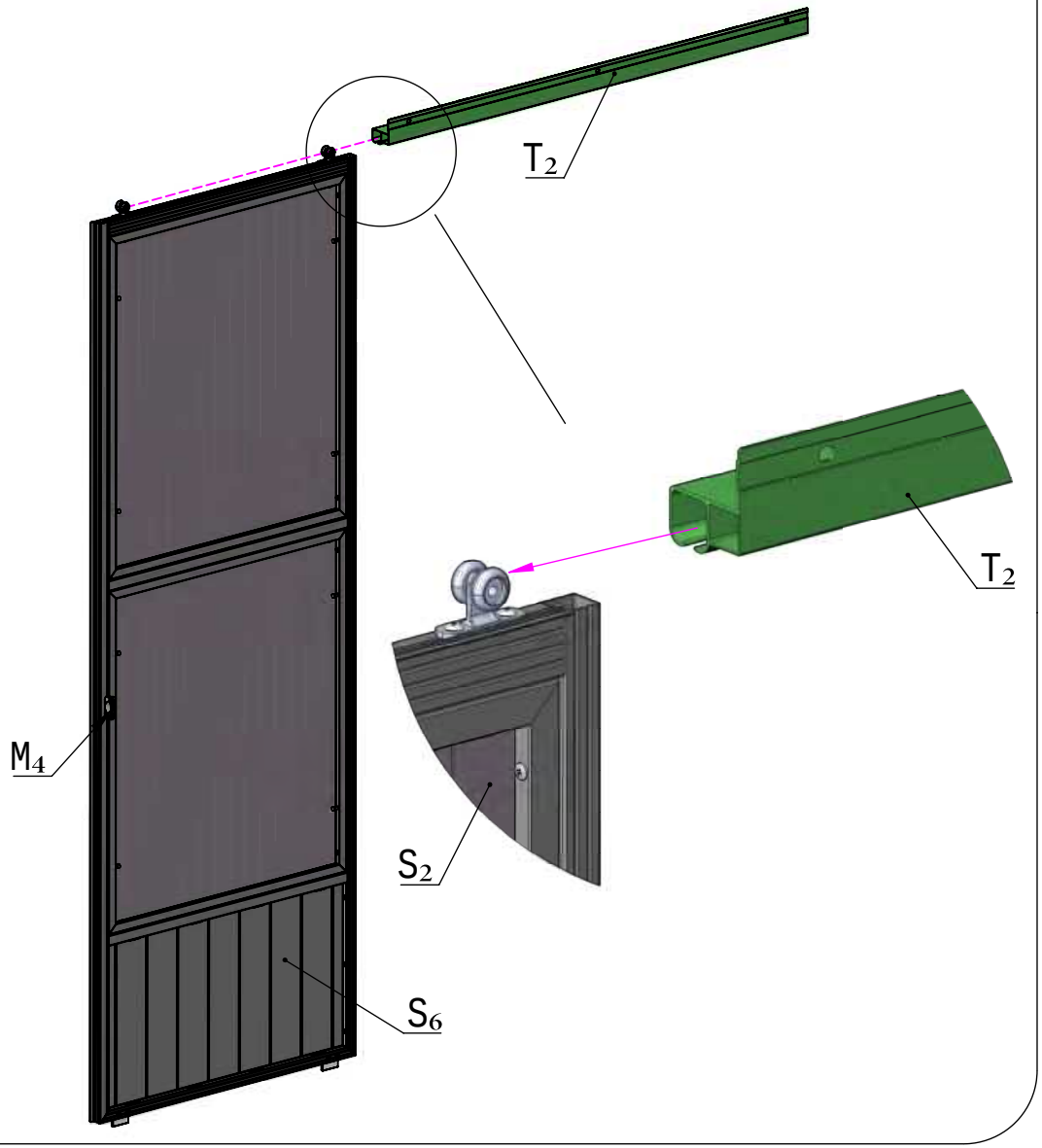

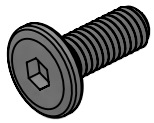

M6*16

4# 3X

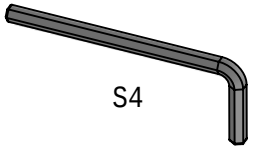

S4

16# 1X

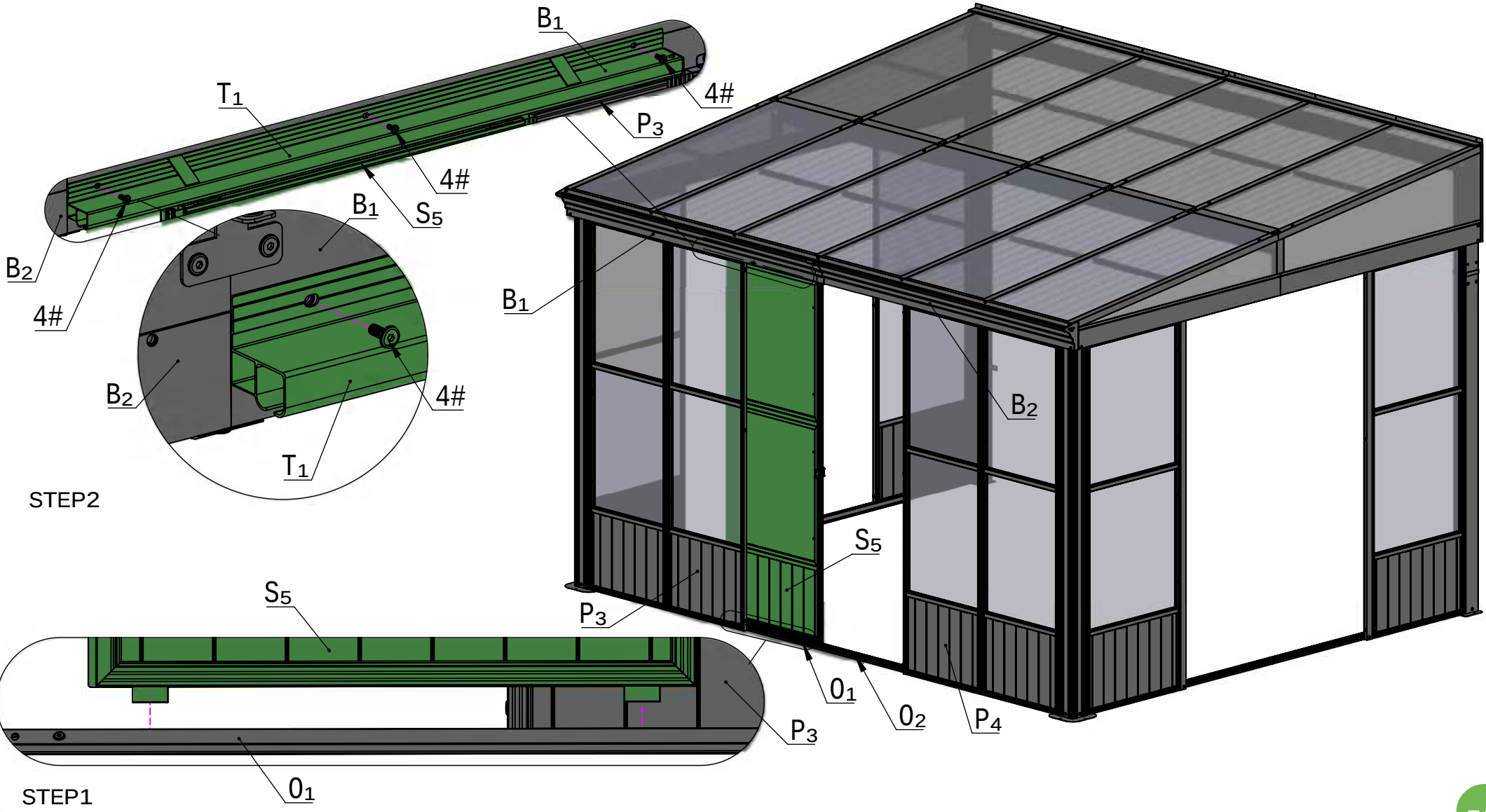



M6*16

4# 3X



S4

16# 1X

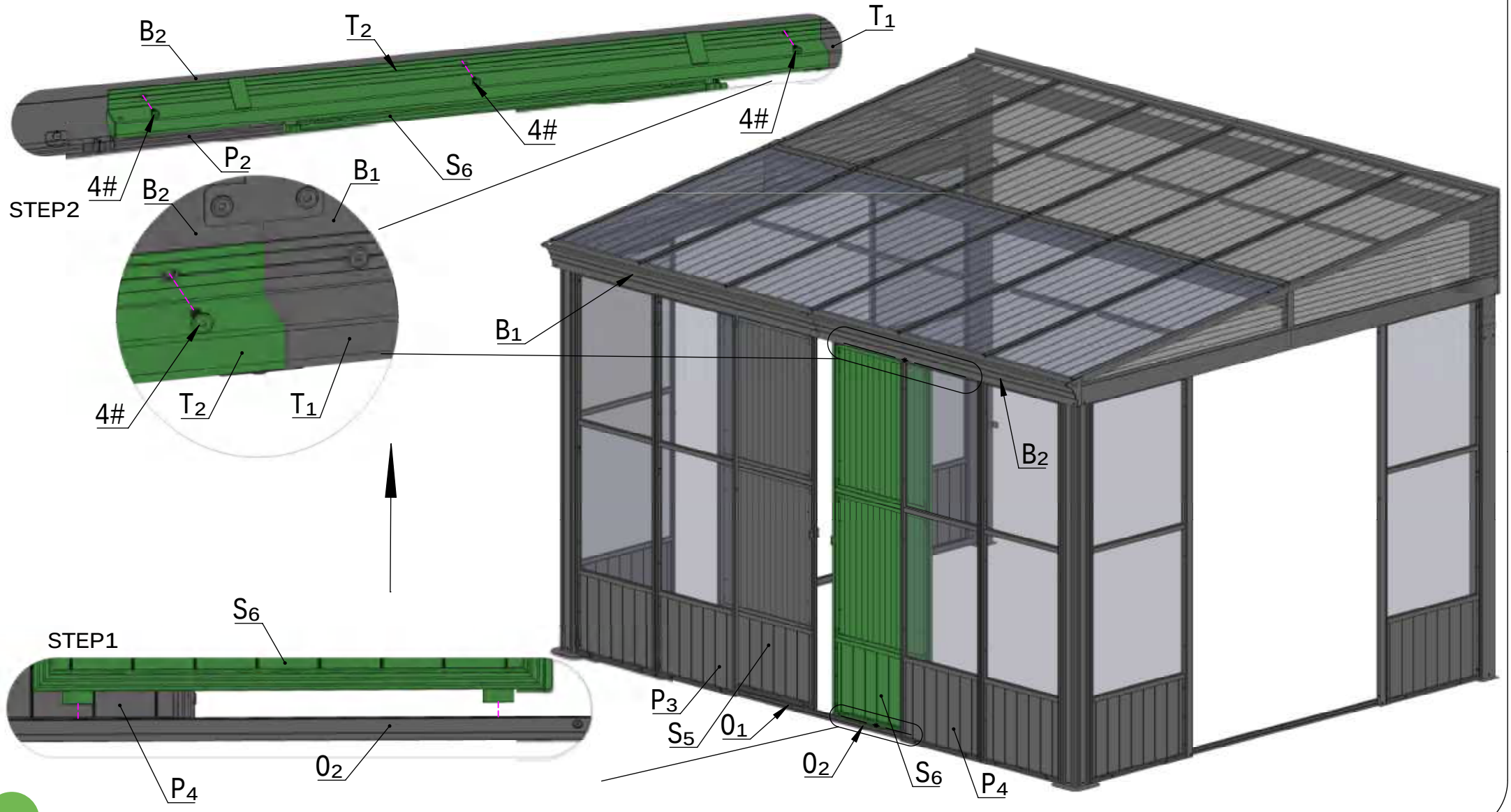

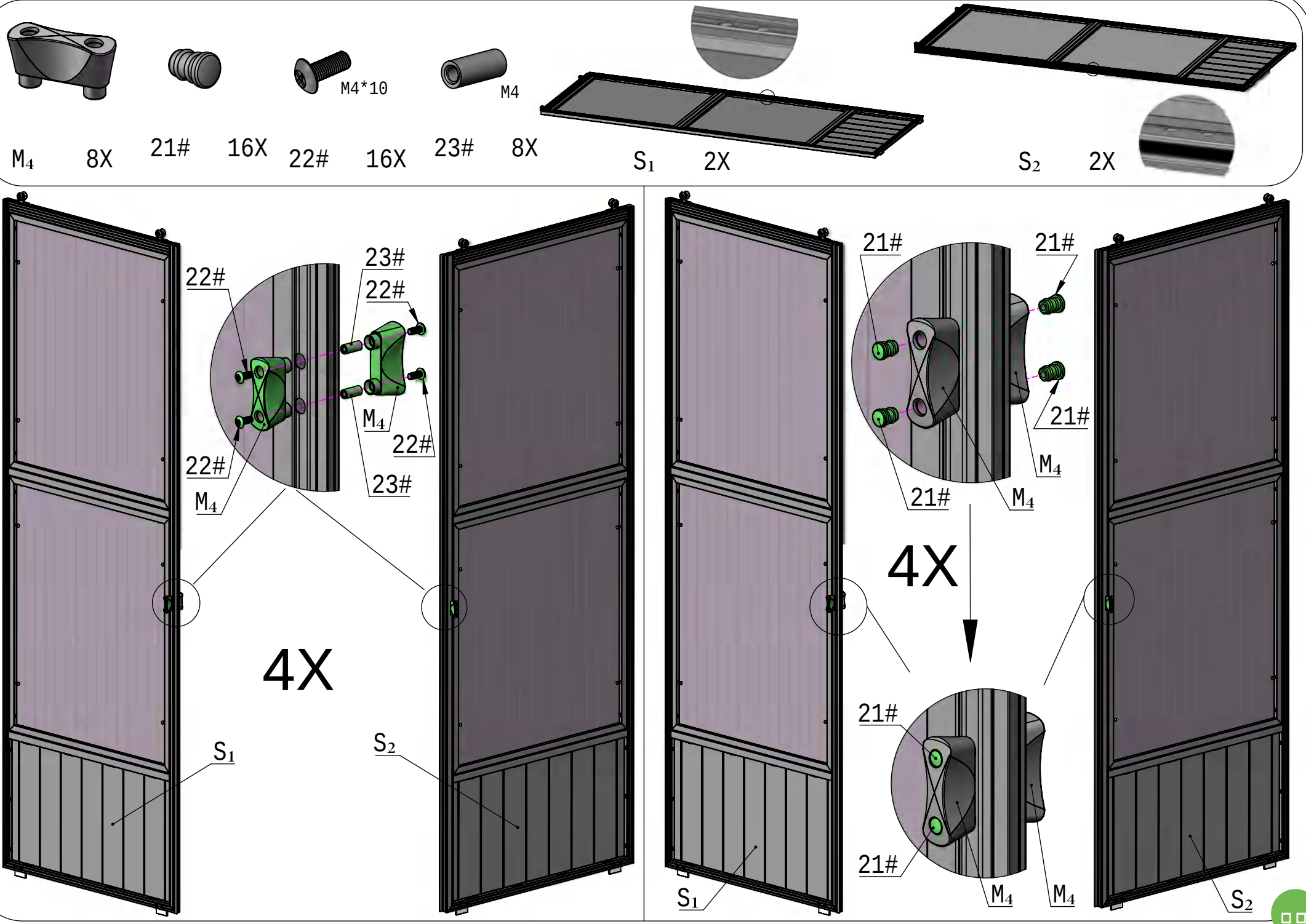
M4*10
M4
M4 8X
21# 16X
22# 16X
23# 8X
S1 2X
S2 2X
22#
23#
22#
M4
22#
22#
23#
4X
S1
S2
21#
21#
21#
M4
M4
4X
21#
21#
M4
M4
S1
S2

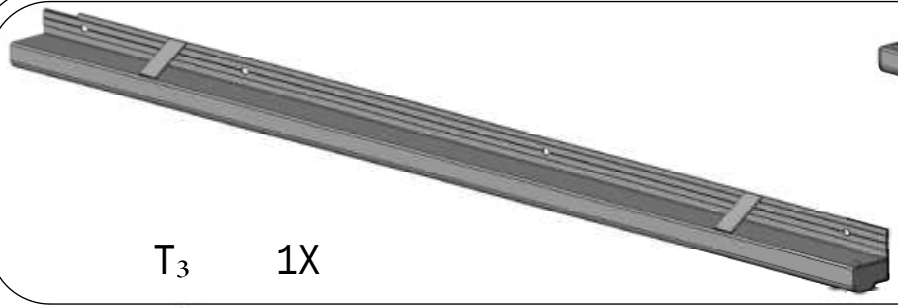

T_3 1X

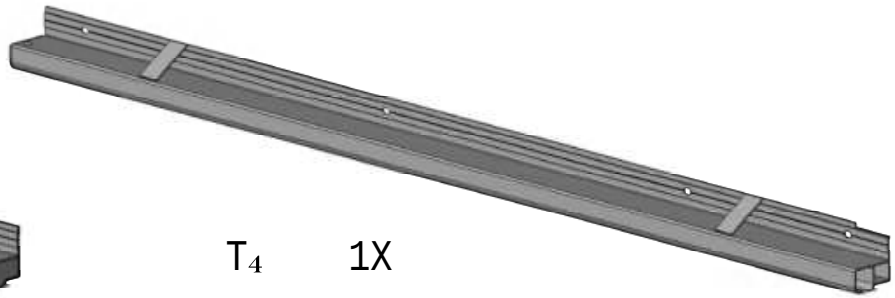

T_4 1X

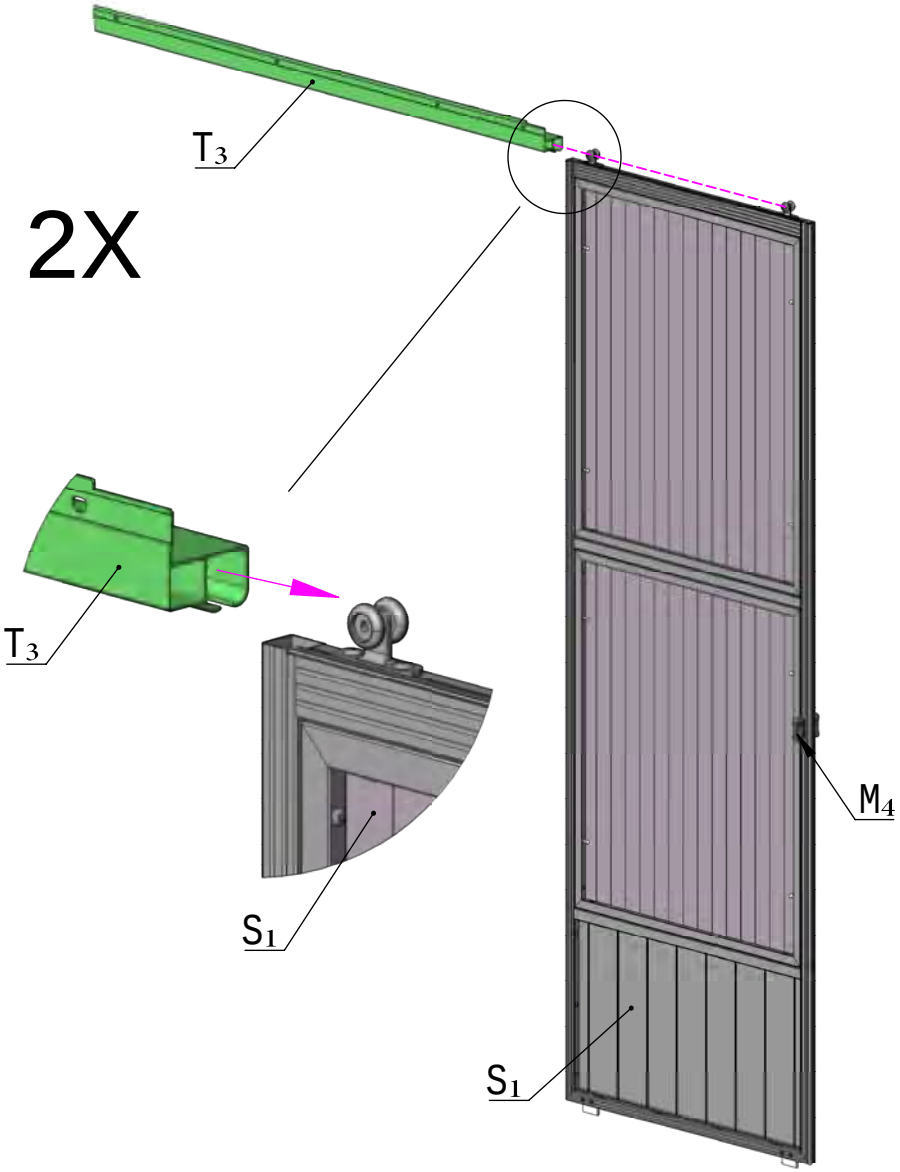

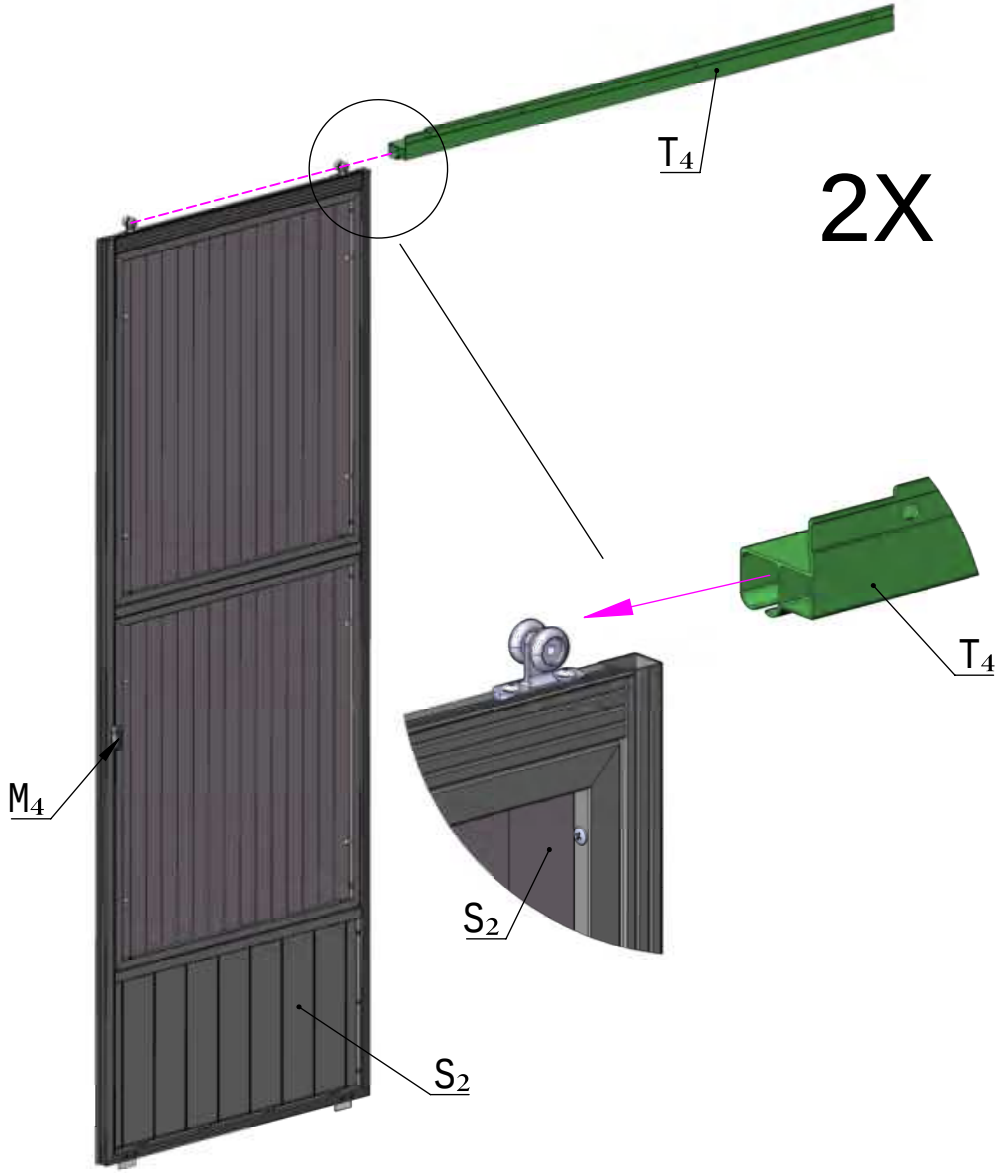



M6*16

4# 4X



S4

16# 1X

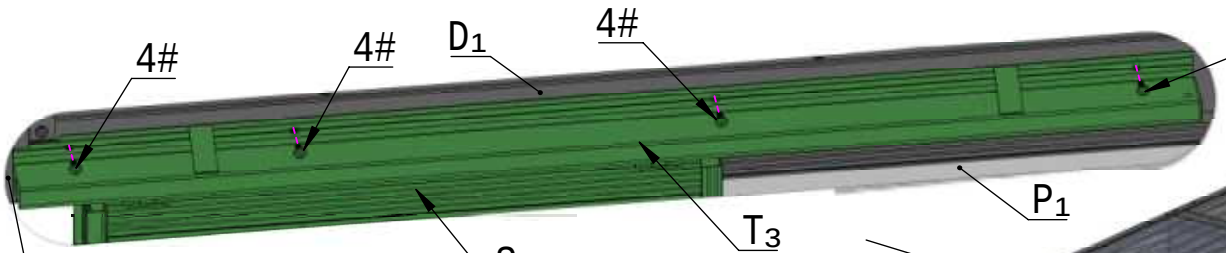

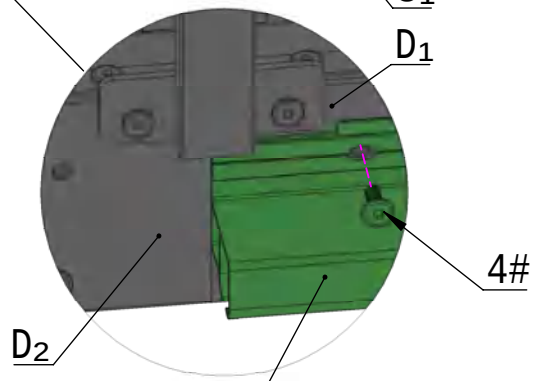

STEP2

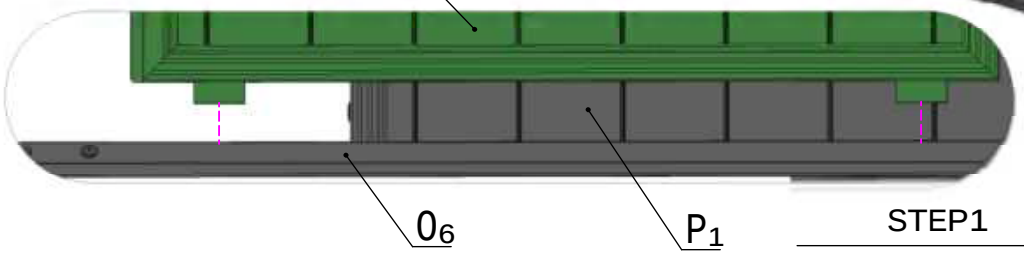

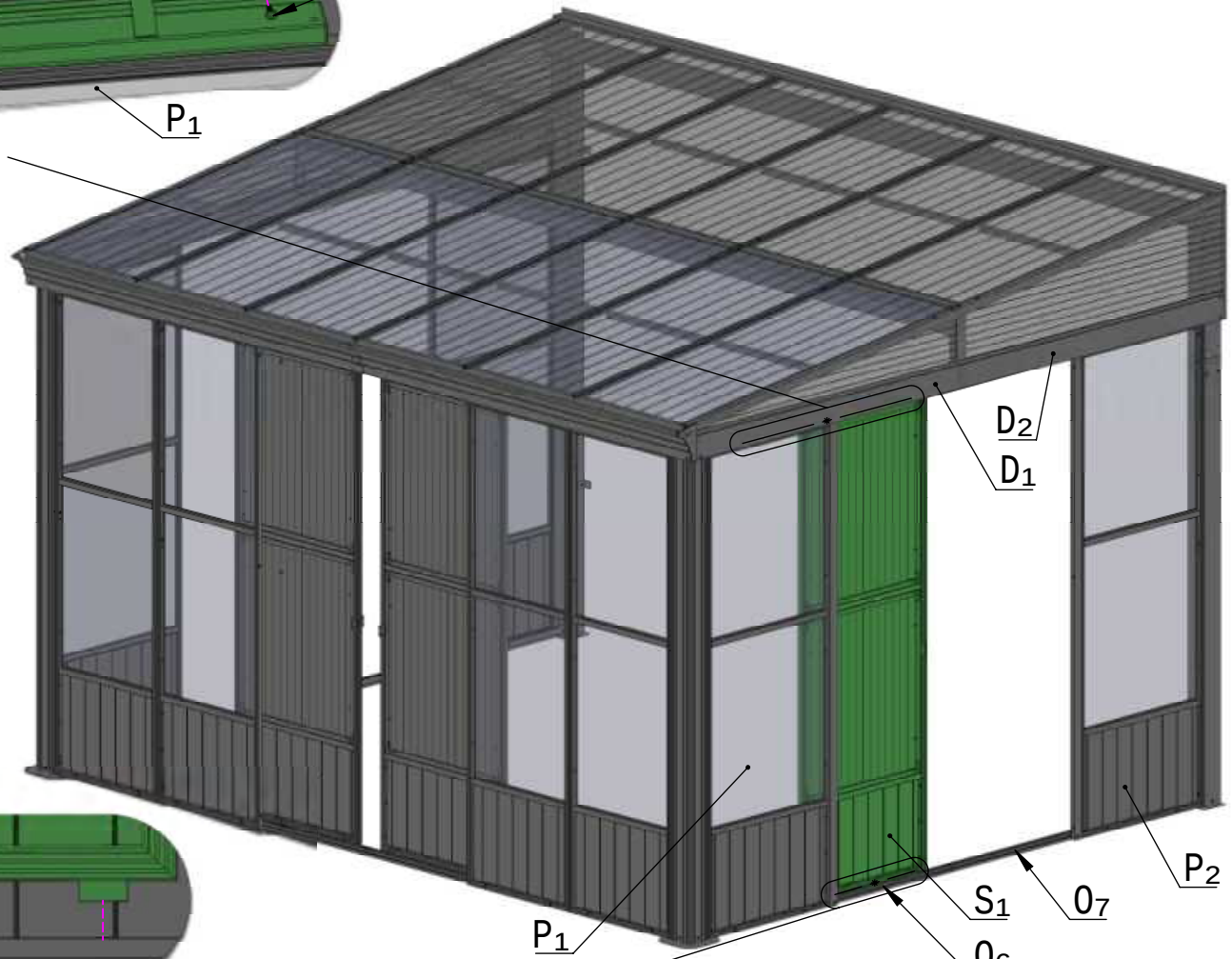

STEP1



M6*16

4# 4X

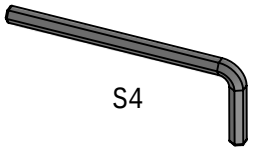

S4

16# 1X

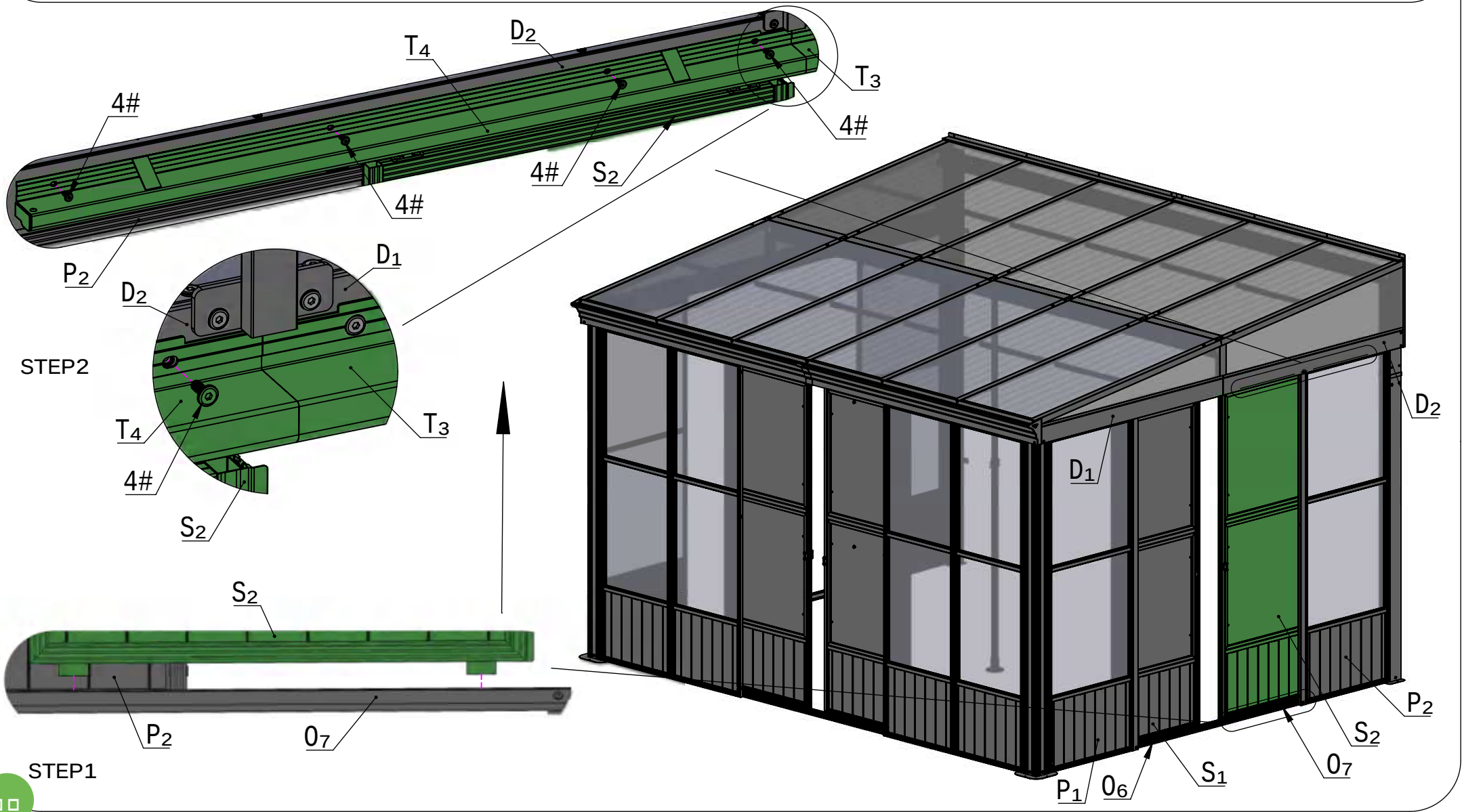


M6*16

4# 4X

S4

16# 1X

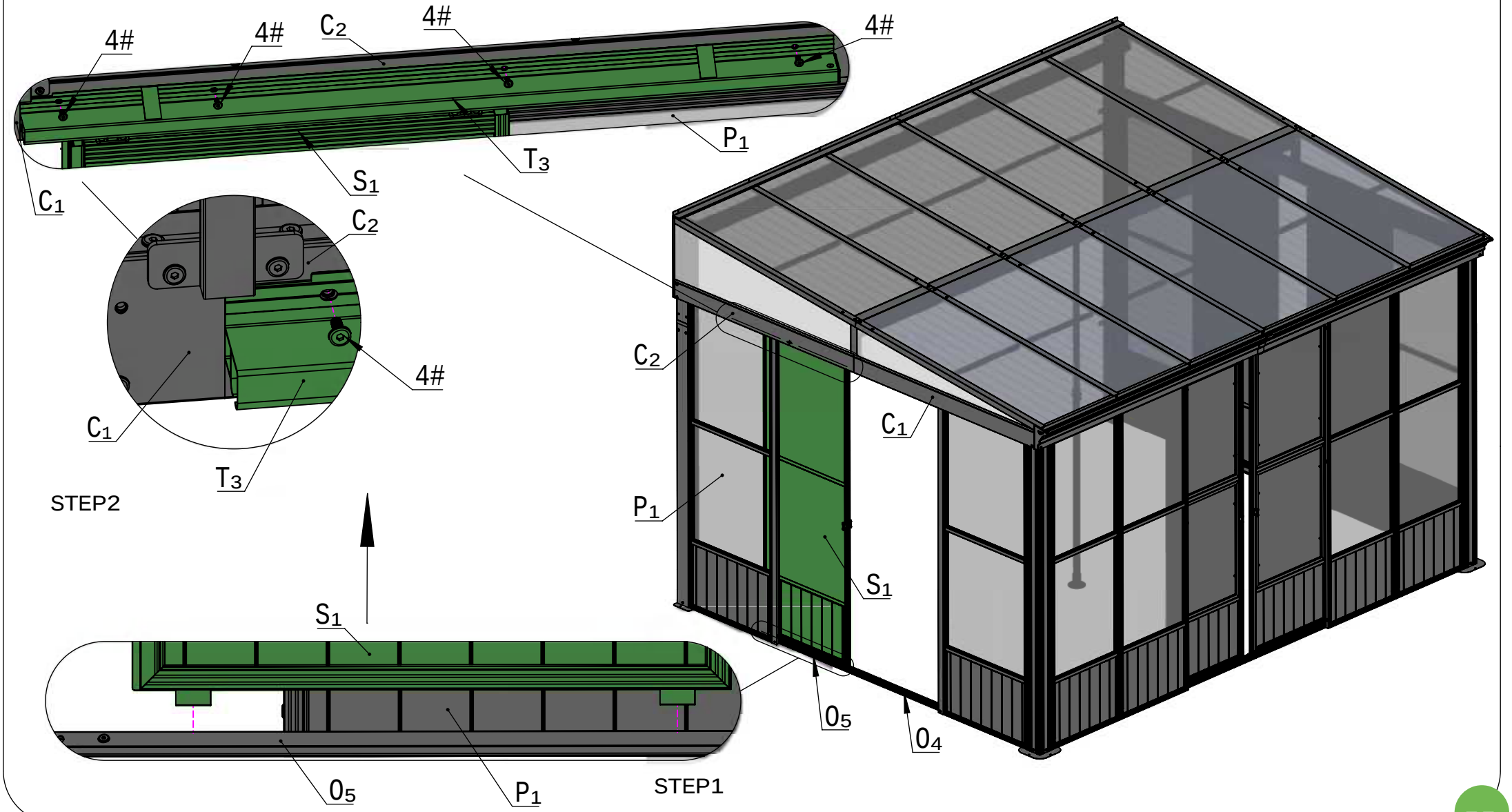
4#
4#
C2
4#
4#
P1
T3
S1
C1
C2
4#
C1
T3
STEP2
C2
C1
P1
S1
S1
O5
O4
O5
P1
STEP1



M6*16

4# 4X



S4

16# 1X

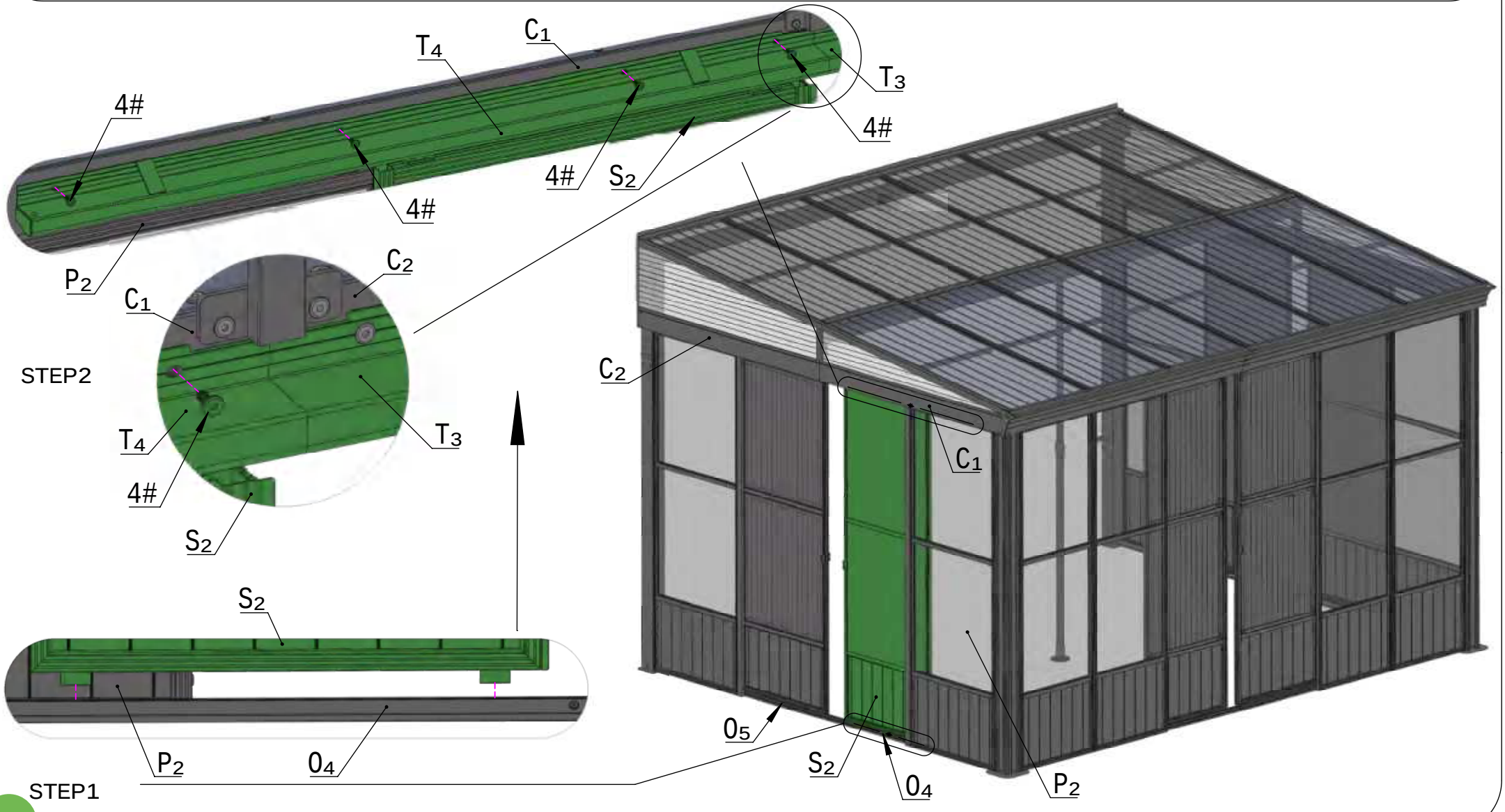

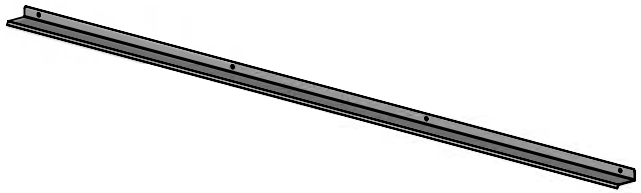

R1 2X

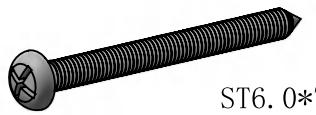

ST6. 0*70

9# 8X

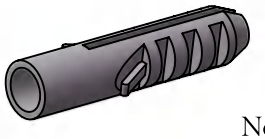

10# 8X

Note: If you do not consider fixing on the wall, you can skip this step. (This step requires drilling holes in the wall for fixing.)

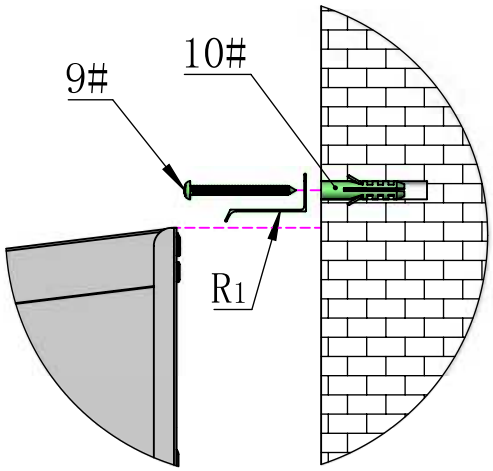

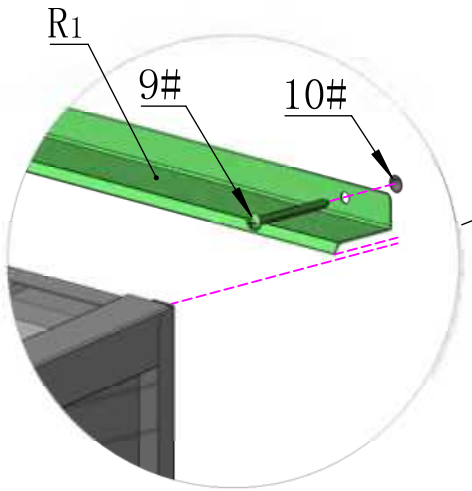

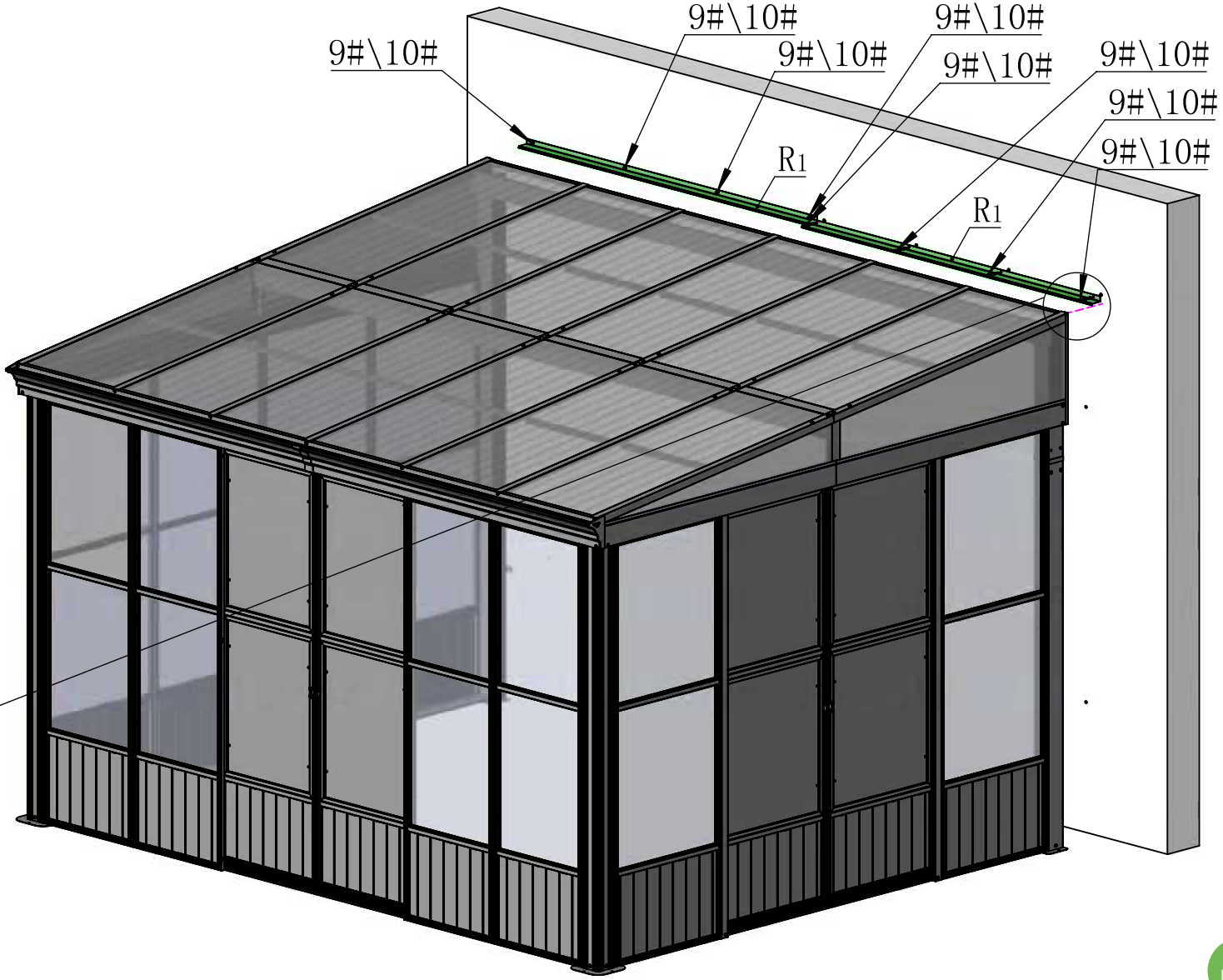


SILICONE

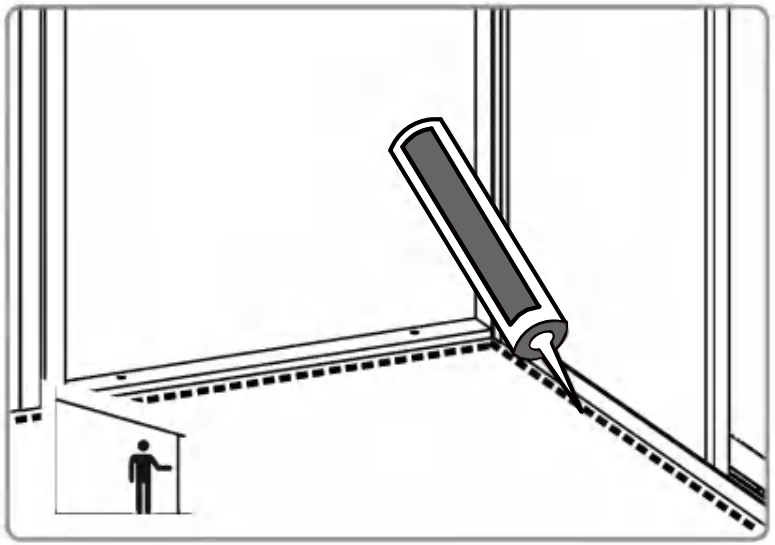

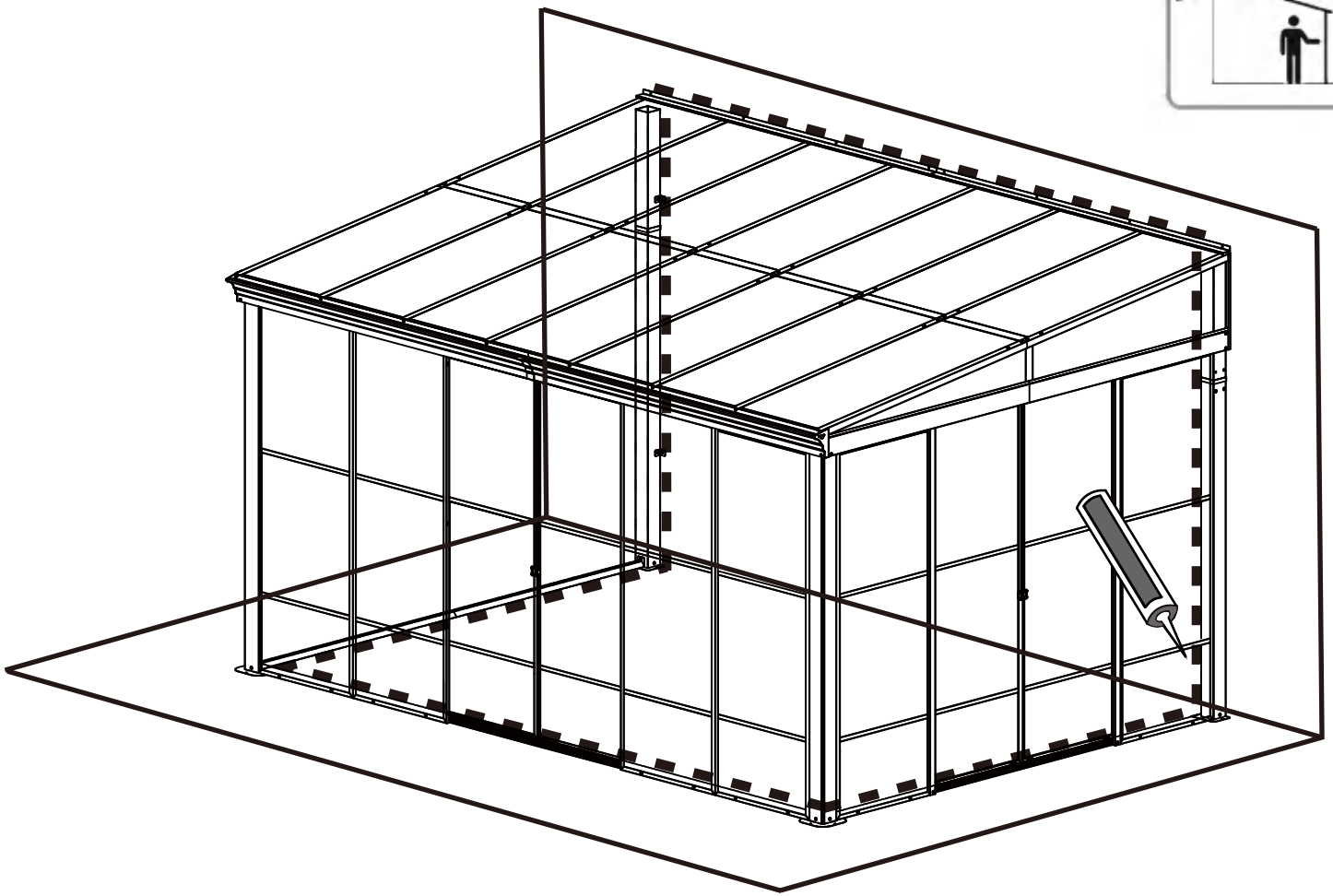

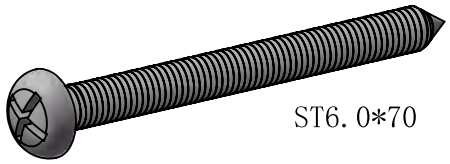

9# 6X

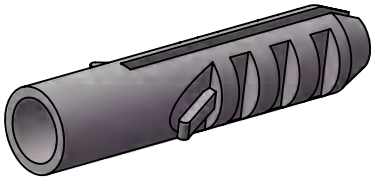

10# 6X

Note: If you do not consider fixing on the wall, you can skip this step. (This step requires drilling holes in the wall for fixing.)

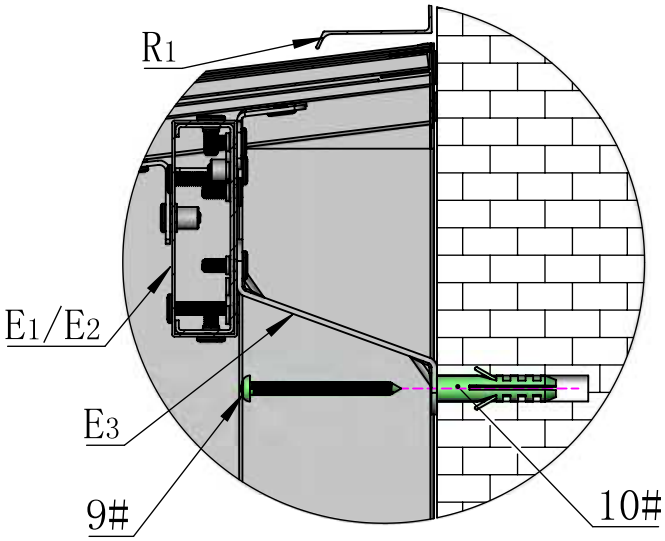

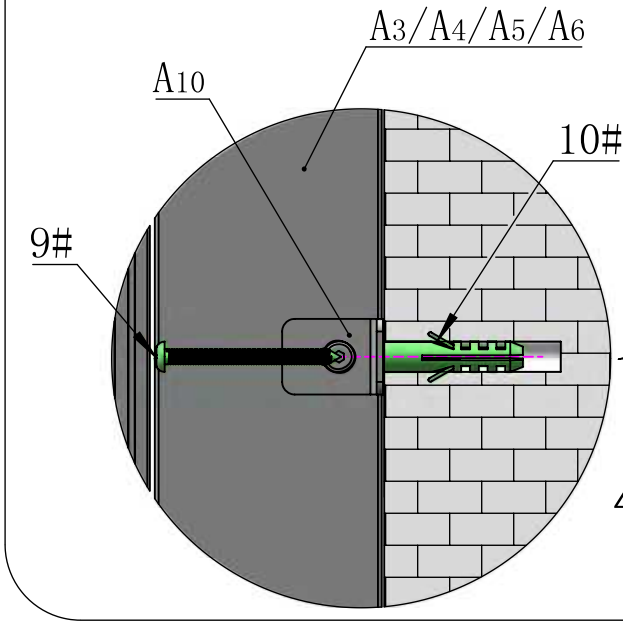

4X

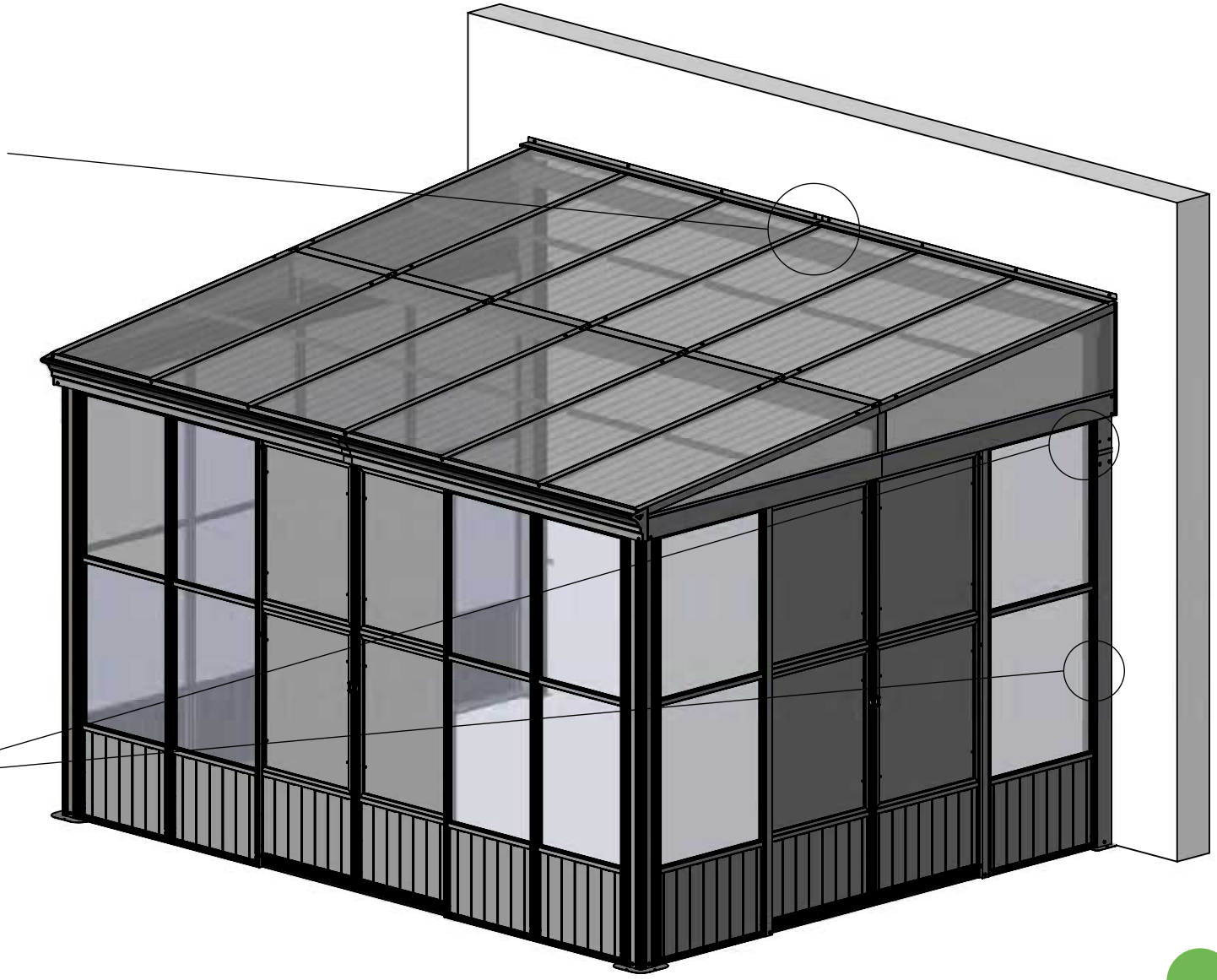

After completing the assembly, you can decide whether to install screens based on your needs.

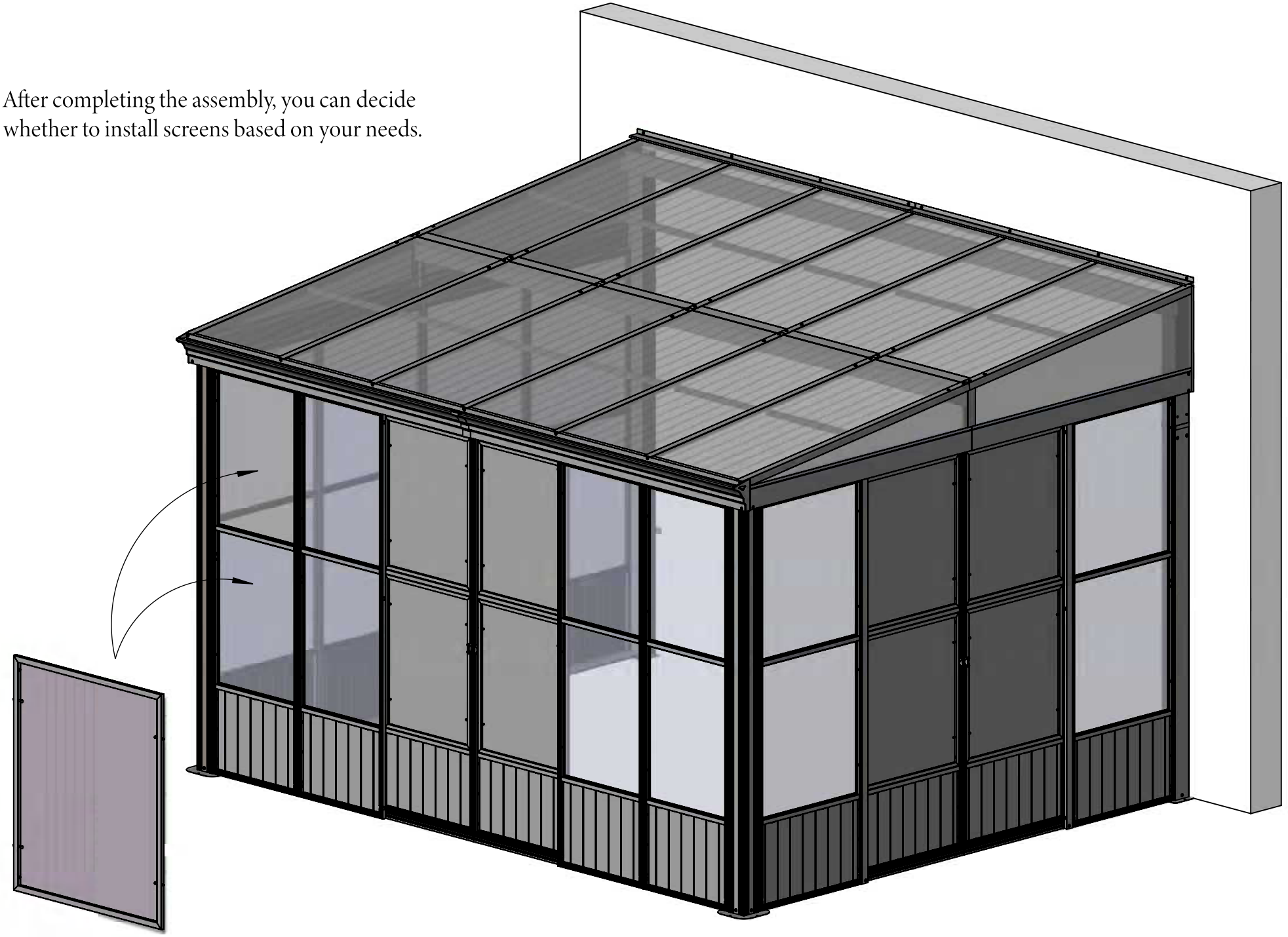

Care and Cleaning

Wash frame part with mild soap and water, rinse thoroughly.

Do not use bleach, or other solvents on the frame parts.

Please check periodically that the sunroom is anchored properly to the floor or ground to enjoy its safe usage.

Please check periodically that all screws are tight to maintain the solidity of the structure.

Please remove any snow accumulation at all times.

Warranty

Frames

Frames constructions are warranted to be free from defects in material and worksmanship for 1 year from item purchased. Damage to frame from negligence won't be covered by this warranty.

Bolts & nuts

Bolts and nuts are warranted to be free from defects in material and worksmanship for 1 year from item purchased. Damage from exposure to chemicals (including not only oils ,spills, fluids) won't be covered by this warranty.

Warranty Limitation

This warranty is for the original purchase order only. (Order number required). This warranty is non-transferable. Domi outdoor living is responsible for the free replacement part including shipping charges for the 1 year warranty.

Warranty Exclusion

This warranty does not cover products subject to negligence, abuse usage, inappropriate installation. Domi outdoor living reserves the right to explain warranty exclusions. When the replacement item is applied, the 1 year warranty automatically expires. Please feel free to contact us for applying warranty.

domi
outdoor living

RESORT COMFORT IN YONR

OWN BACKYARD

Support:

Business cooperation contact email:
marketing@domioutdoorliving.com

After-sales contact email:
service@domioutdoorliving.com

Please tell us your order ID when contact.

Attach photos of damaged part for instant reply.