Kids Bookshelf & Toy Organizer

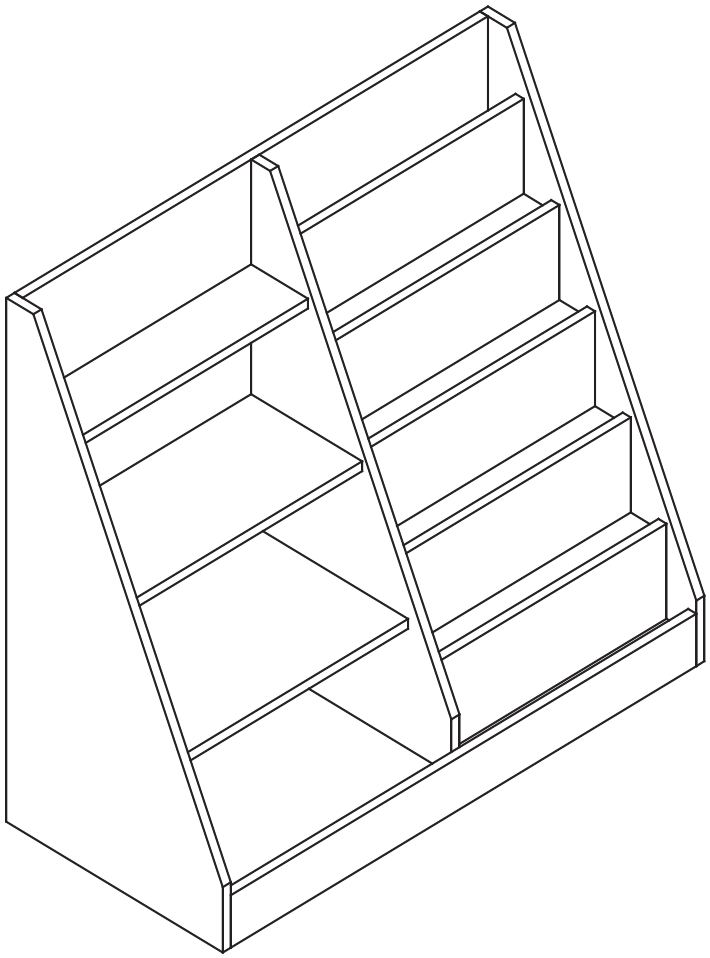

General Guidelines

Please read the following instructions carefully before installing and using the product.
Please keep this manual and hand it over when you transfer the product.
This summary may not include every detail of all variations and considered steps.
Please contact us when further information and help are needed.

Notes

It is recommended that two people assemble the product. Please follow the assembly steps strictly.
During assembly, align all screws with the corresponding pre-drilled holes first and then tighten the screw one by one.
This product is for indoor use only. Don't place it in humid areas for long time to prevent mildew.
Avoid sharp objects or corrosive chemicals to prevent damage to the product.

Warnings

Children are not allowed to assemble the product. During assembly, keep all parts and packaging materials away from children as there could be injury and potential choking hazarde.
Children are not allowed to stand, climb or play on the product to avoid serious bodily injury by the toppling.
Never use the product if any part is missing or defective. Otherwise,there will be a hazard.
Maximum load capacity per shelf: 5 kg (11 lbs).Do not place overweight items on it.

Parts List

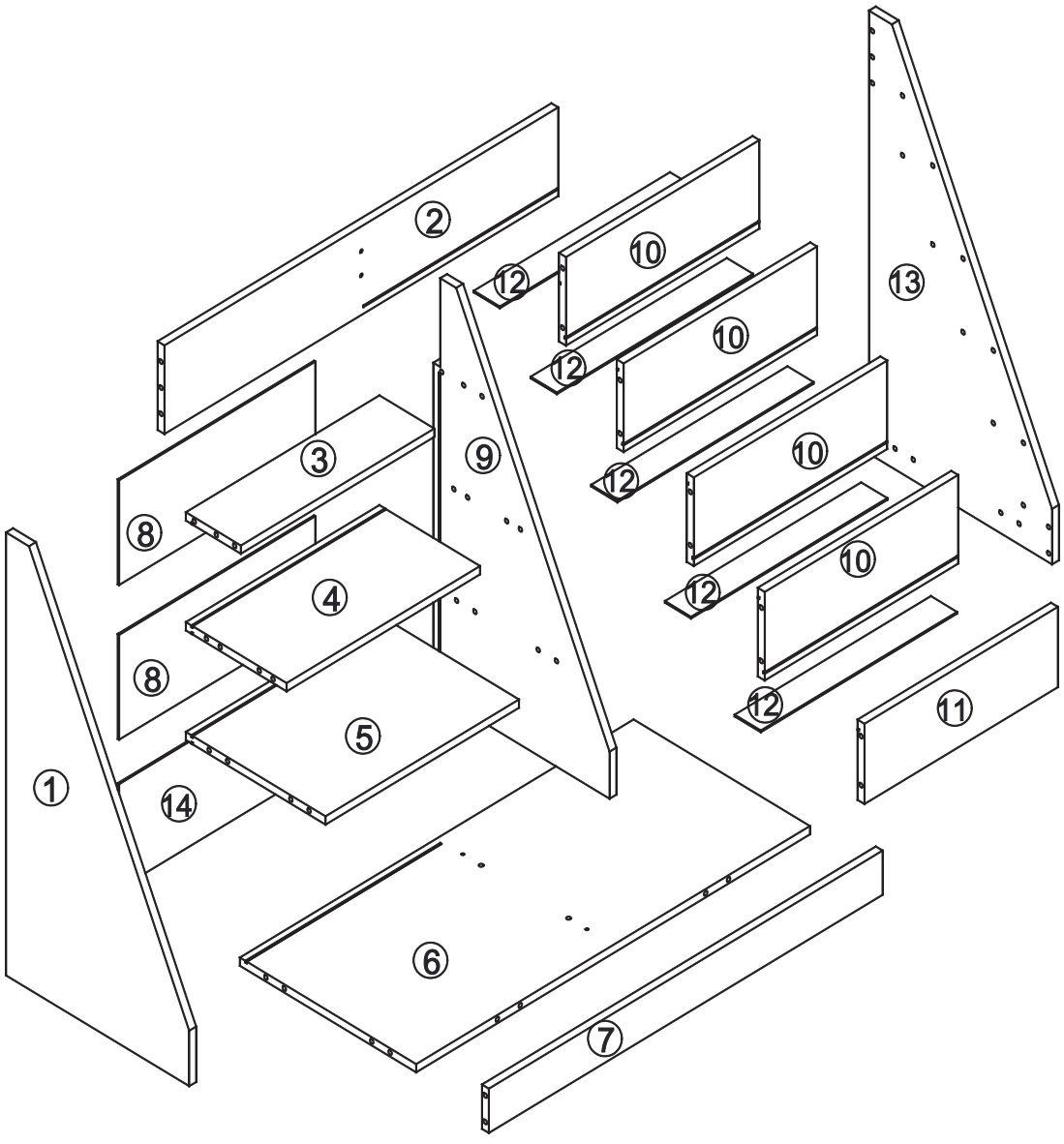

Hardware List

1 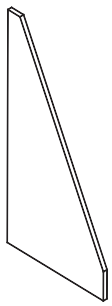 1PC	2 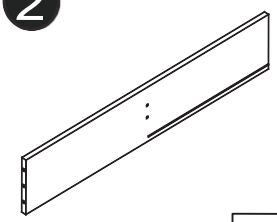 1PC	3 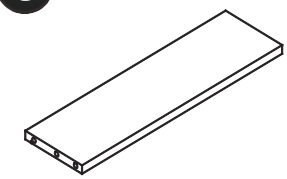 1PC	4 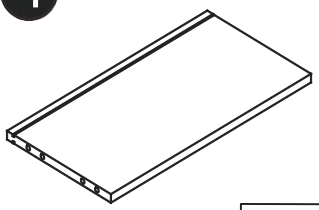 1PC
5 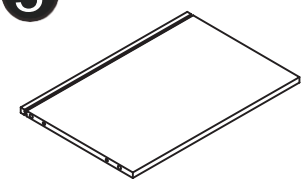 1PC	6 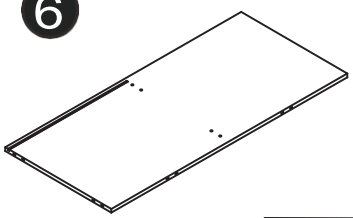 1PC	7 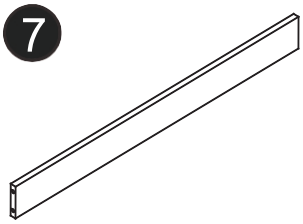 1PC	8 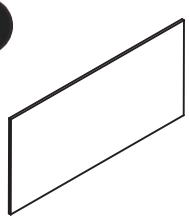 2PCS
9 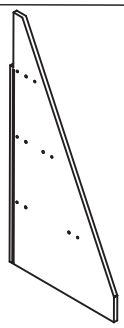 1PC	10 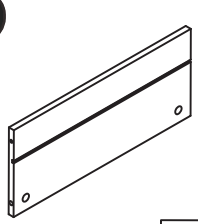 4PCS	11 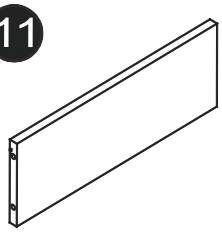 1PC	12 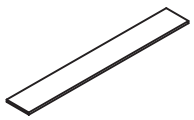 5PCS
13 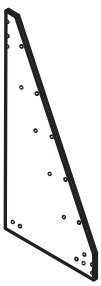 1PC	14 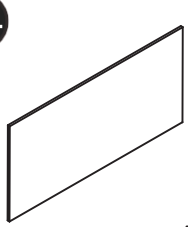 1PC		

Hardware List

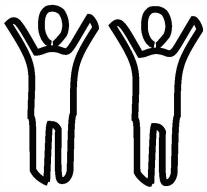
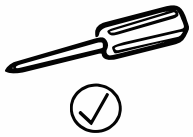
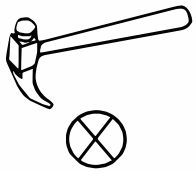
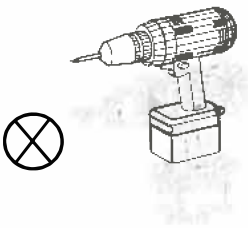

Note: Please do not use an electric drill for installation

A 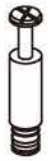 32+1PCS	B  32+1PCS	C 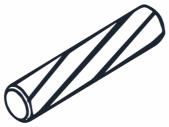 M6X30MM 35+1PCS	D  3PCS
E  1PC	F 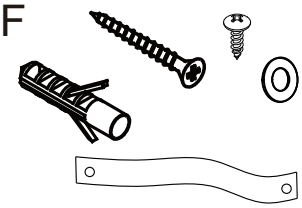 1PC		

Instructions For Fastening
CAM-BOLT and CAM-LOCK



CAM-BOLT



CAM-LOCK

Tools Required



INSERTING AND TIGHTENING CAM-BOLT

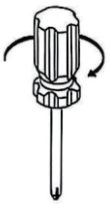

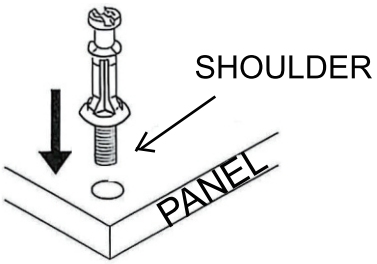

Place Cam-bolt on pre-drilled hole and screw in vertically

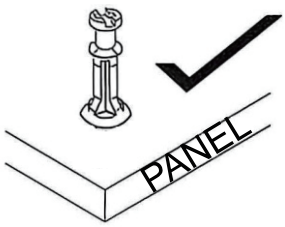

Shoulder is flushed(on the same level) with the panel.

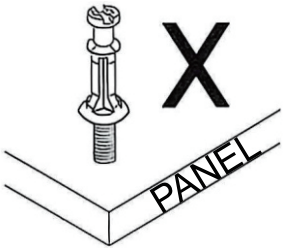

Shoulder is above the panel

Place the cam bolt into the designated pre-drilled hole on the panel. Use a Phillips screwdriver to screw in the cam bolt vertically until the shoulder is flush with the panel surface.

INSERTING CAM-LOCK

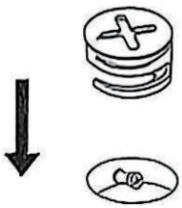

Insert Cam-lock with arrow align to Cam-bolt head

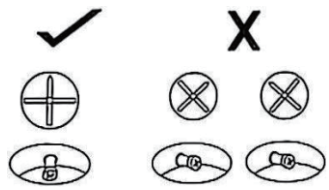

CORRECT WRONG

Align the arrow on the Cam-lock to the Cam-bolt head and Insert the Cam-lock. Ensure Cam-lock is fully inserted.

TIGHTENING CAM-LOCK

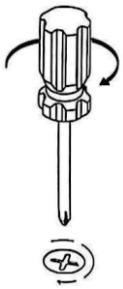

Use a flat-head screwdriver to turn the cam lock clockwise until it locks onto the head of the cam bolt. Turn approximately ¾ of a turn until snug—do not overtighten, as this may damage the cam lock or cam bolt.

Scan the QR code on the left to watch the installation video for the three-in-one screw.

Step 1

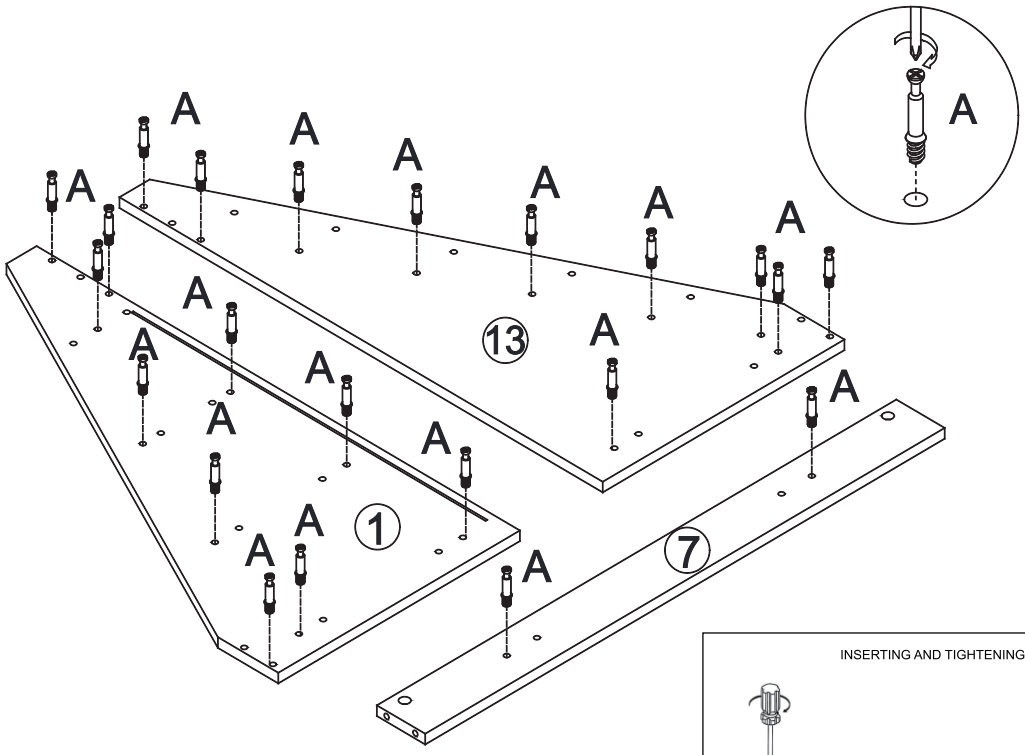

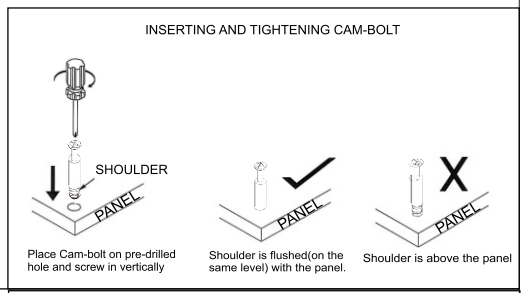

Ax22

Step 2

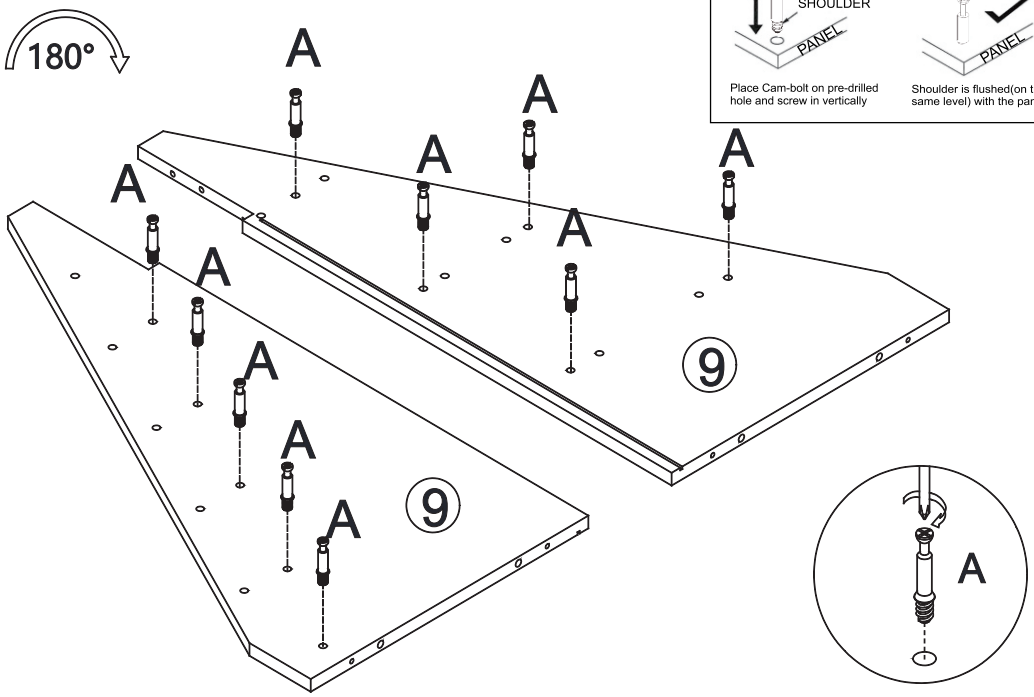

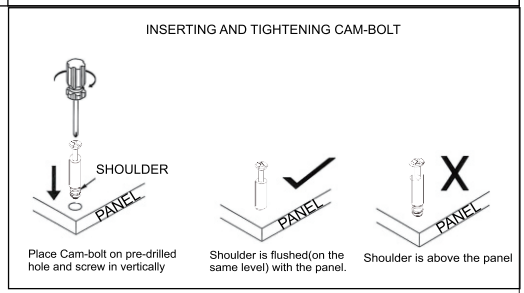

Ax10

Step 3

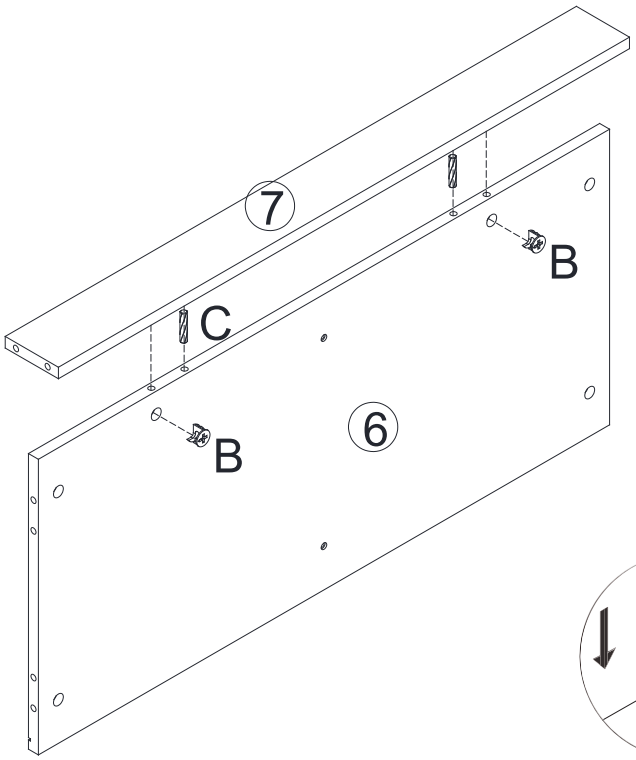

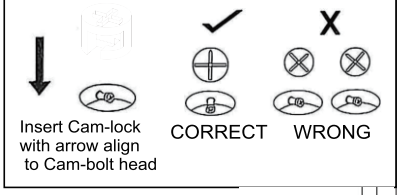

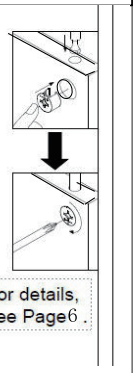

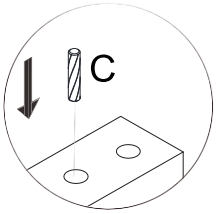

	BX2
	CX2

Step 5

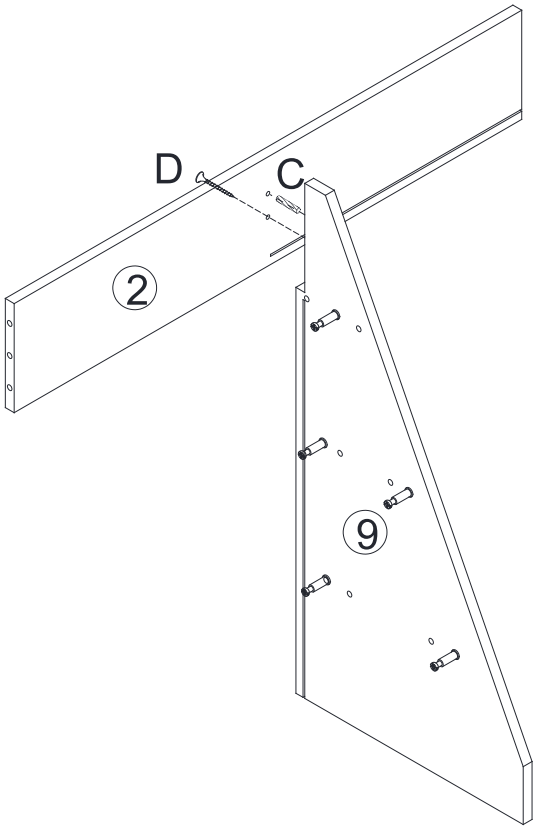

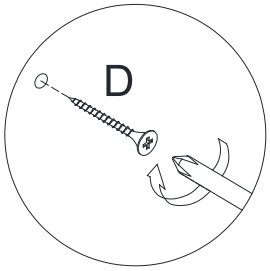

	Cx1
	Dx1

Step 6

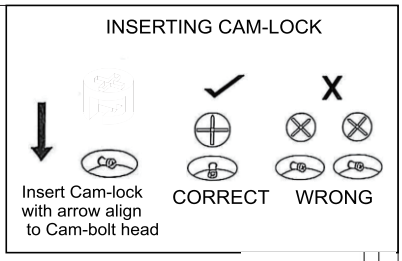

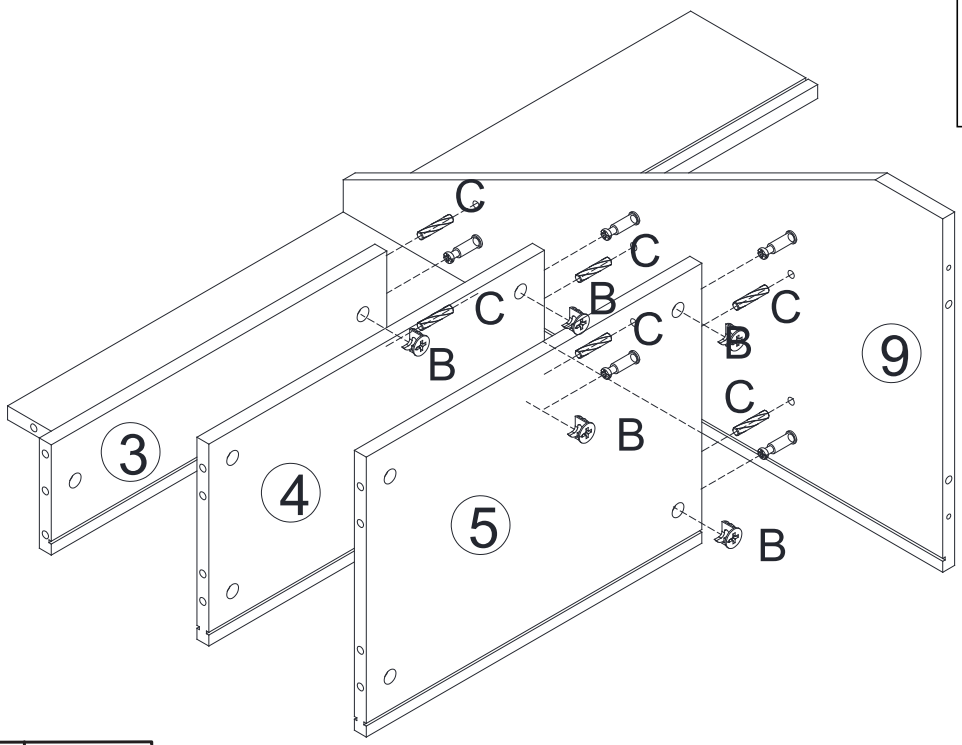

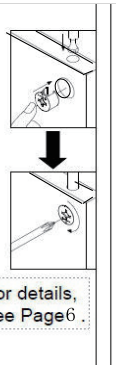

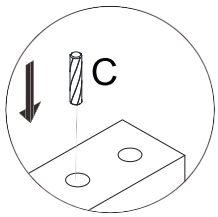

	Bx5
	Cx6

Step 7

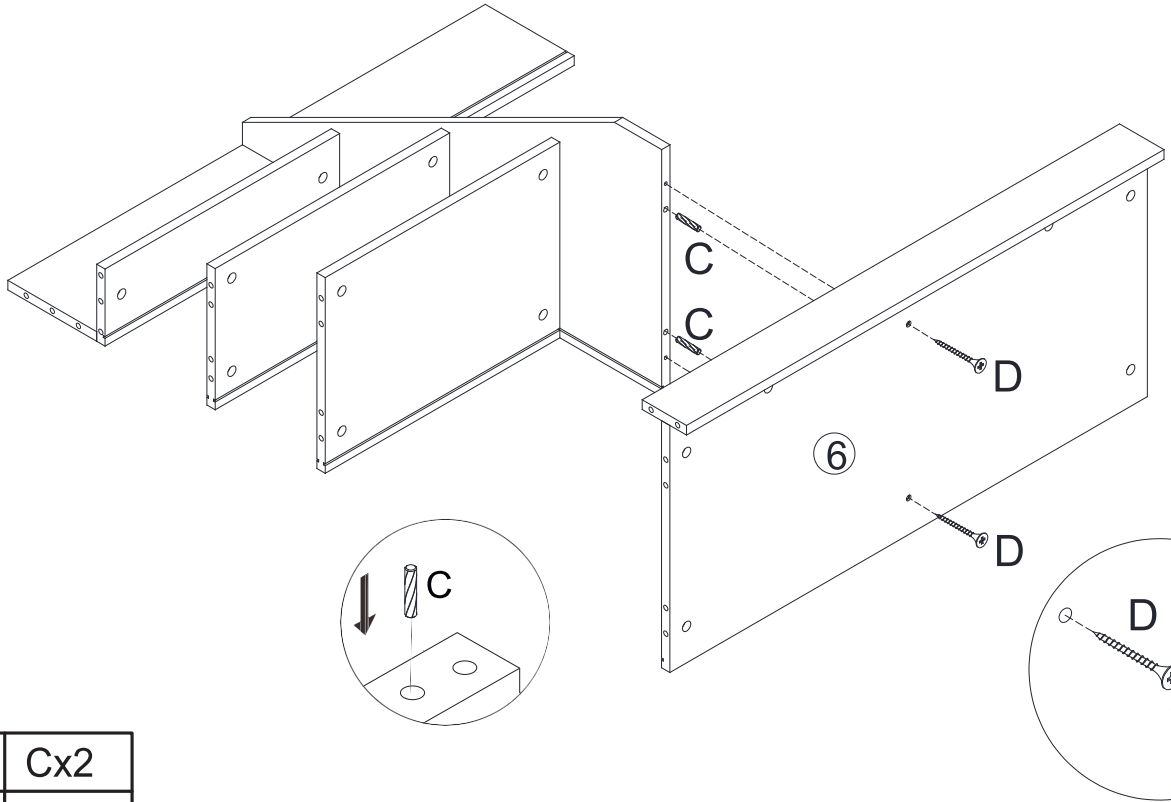

	Cx2
	Dx2

Step 8

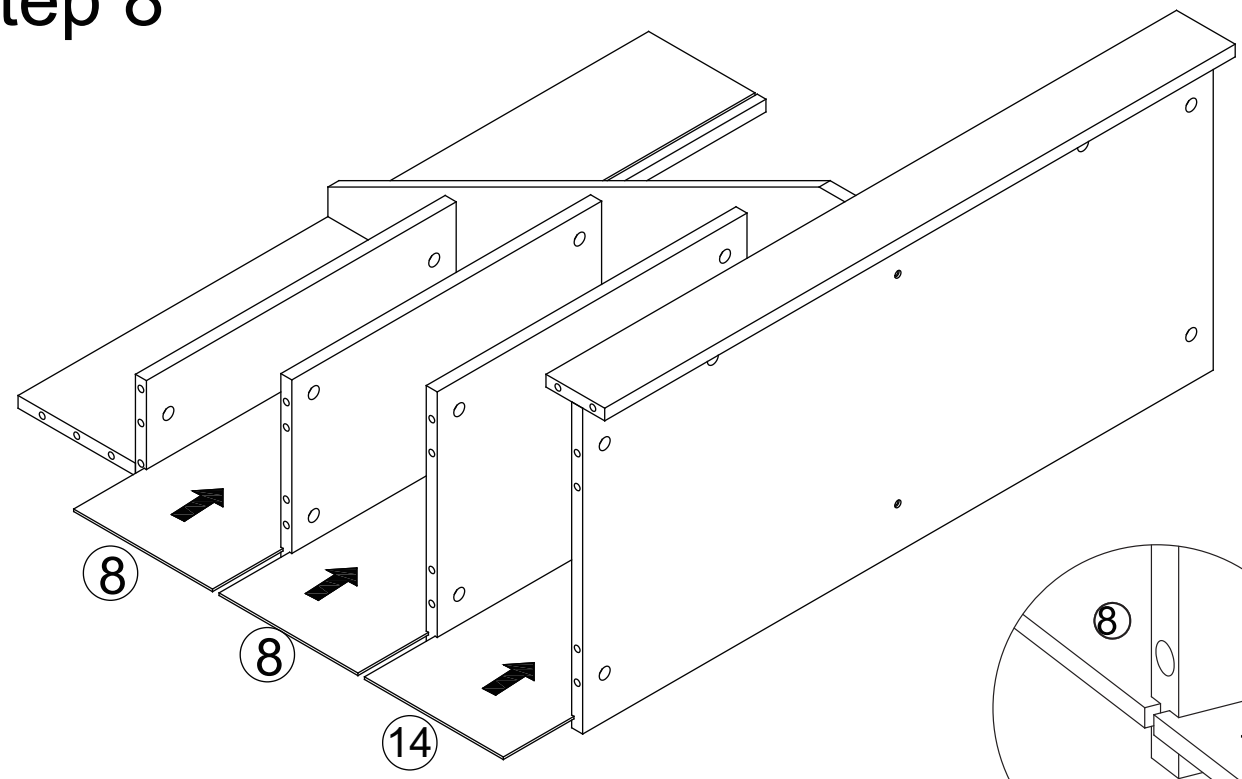

Step 9

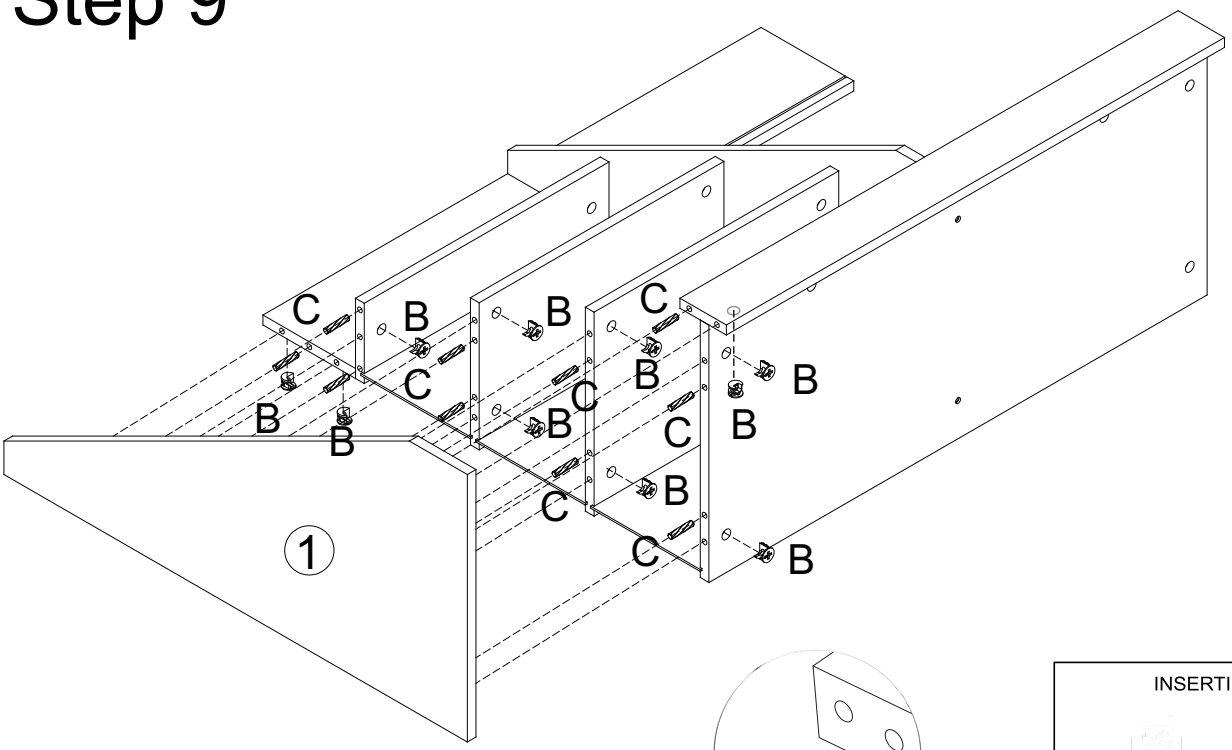

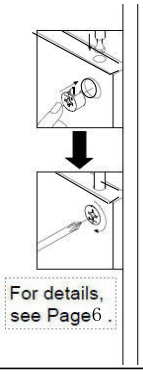

For details, see Page6 .

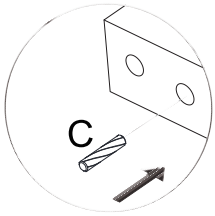

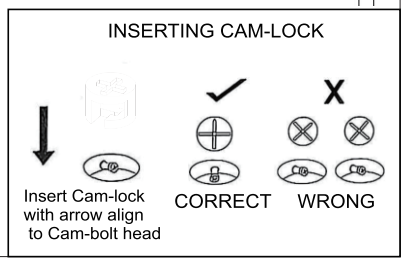

	Bx10
	Cx10

Step 10

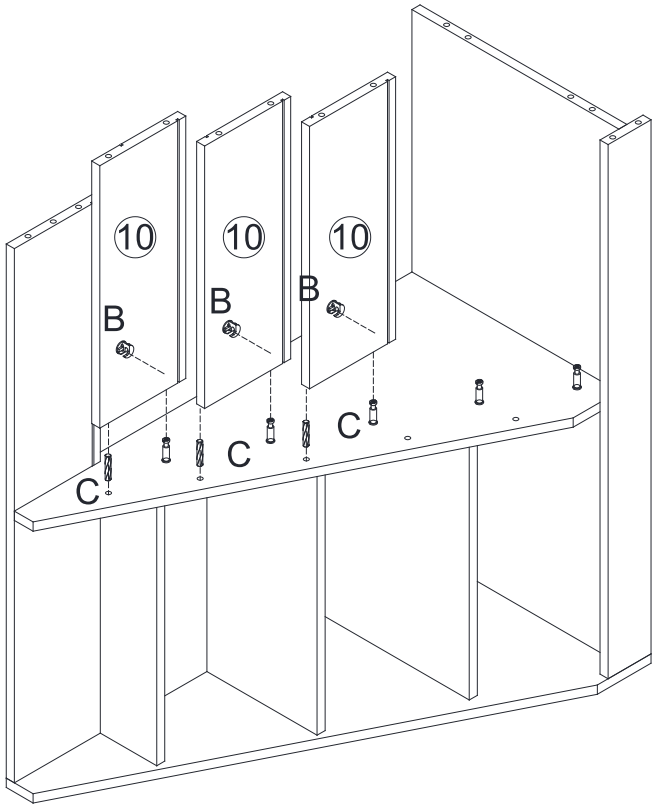

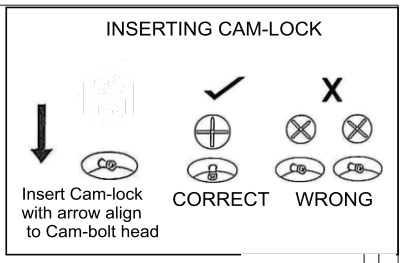

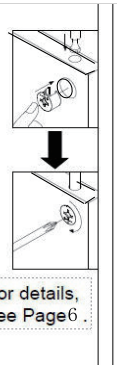

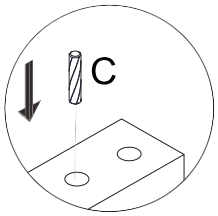

	Bx3
	Cx3

Step 11

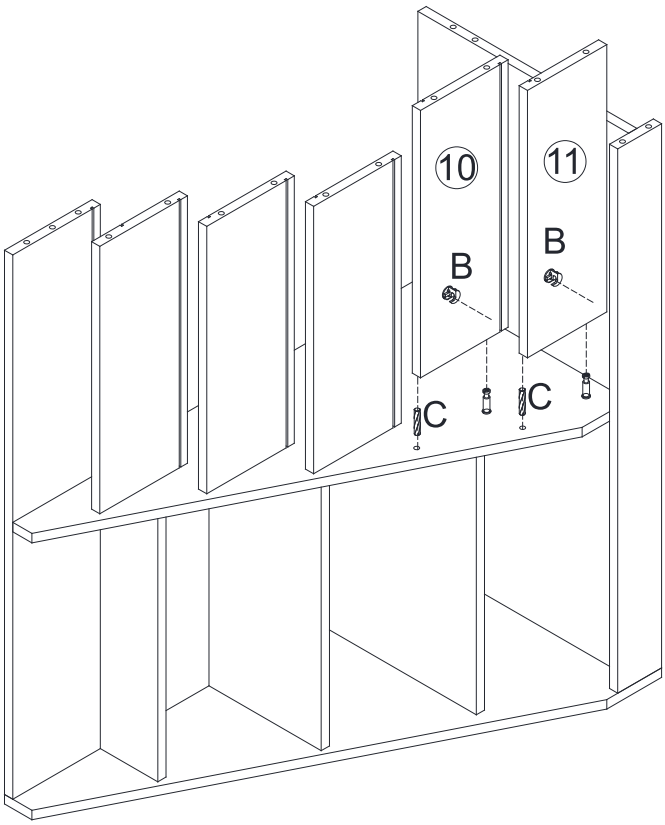

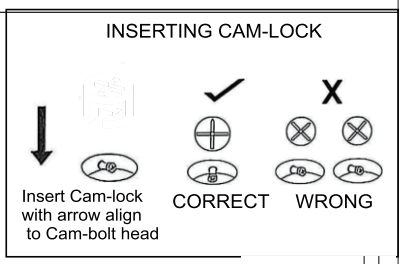

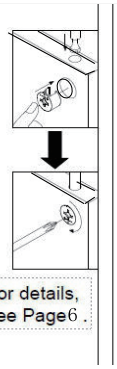

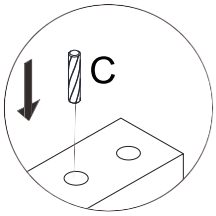

	Bx2
	Cx2

Step 12

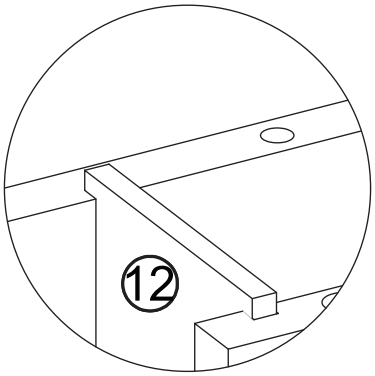

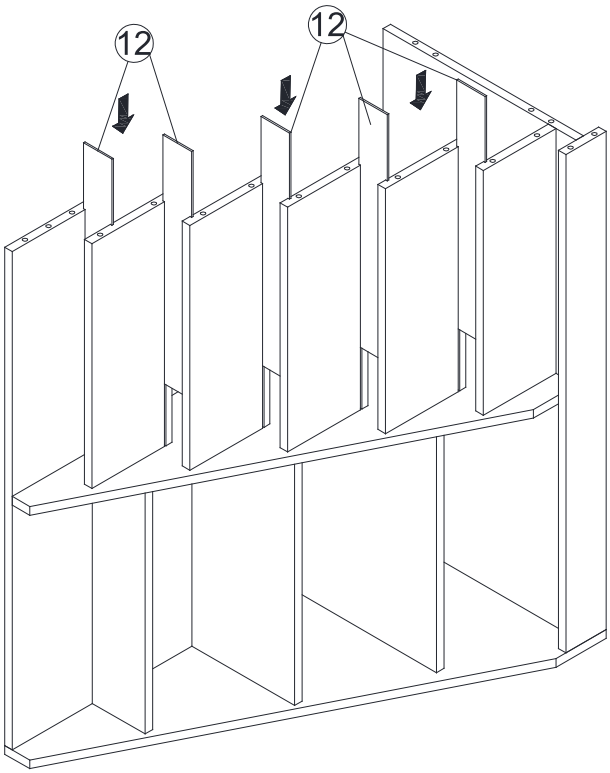

Step 13

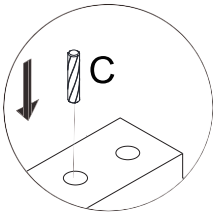

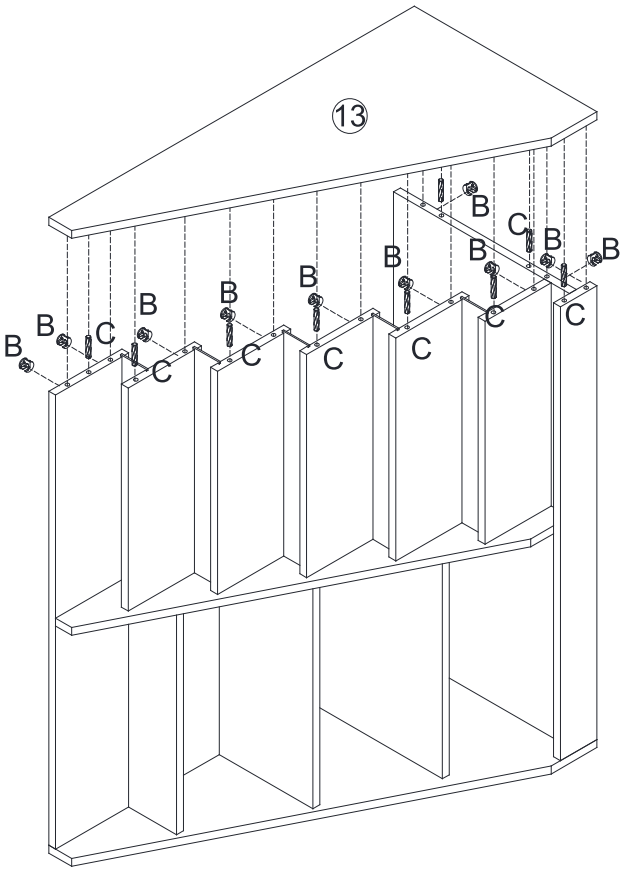

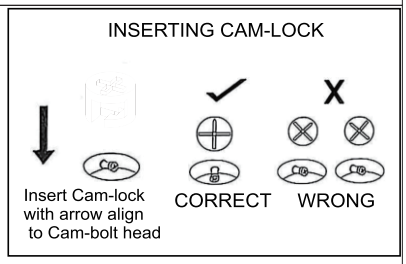

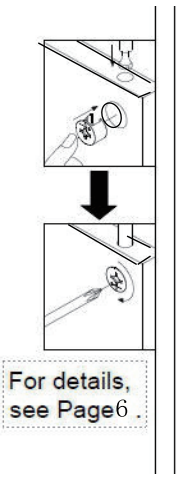

	Bx10
	Cx9

Step14

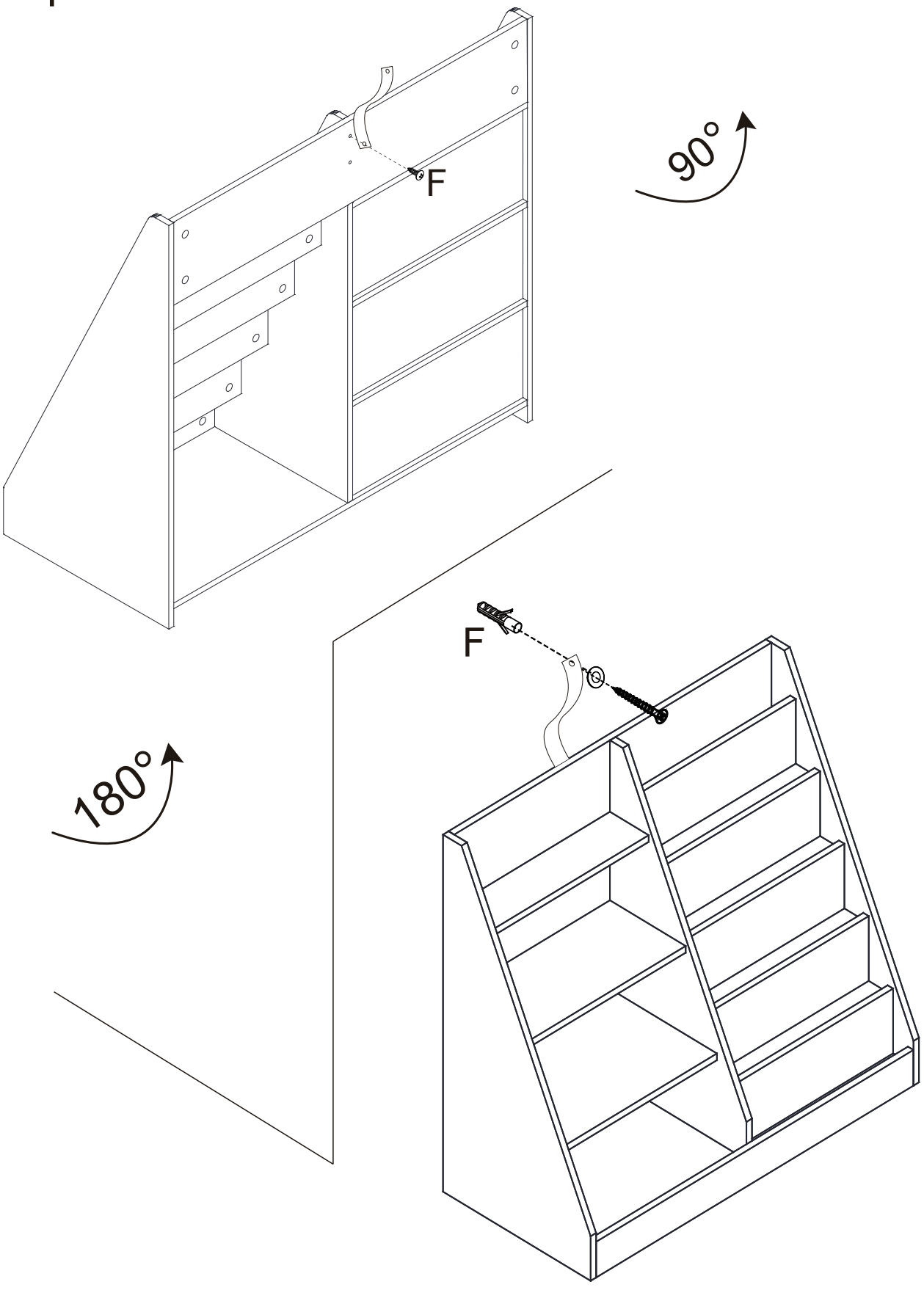

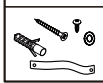

Fx1