ELECTRIC FIREPLACE

USER MANUAL

Model # ZHX-23-103/ZHX-23-104

120V AC / 60Hz / 1500W

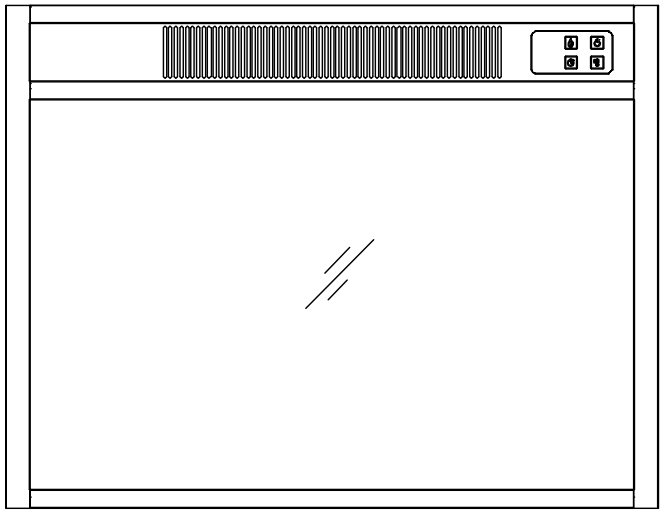

WARNING	Kindly read and understand this entire user manual, including all safety information before plugging in and using this product. Failure to do so could result in fire, electric shock, or serious personal injury.
CAUTION	Keep this user manual for future reference. If you sell or give this product away, please make sure the manual is provided to the end user.

Questions, problems, missing parts? Before returning to your retailer,Contact the seller you place the order from or service center.

CONTENTS

1. Important Safety Information 2
2. Installation Instructions 3
3. Operation Instructions 4
   3a. Manual Control Panel 5
   3b. Remote Control 7
4. Care and Maintenance 8
5. Limited Warranty 9
6. Troubleshooting Guide 10

1.IMPORTANT SAFETY INFORMATION

WARNING: Any use of this appliance other than that recommended by the manufacturer in this owners manual may cause fire, burns, electric shock and/or other serious injuries or death.

When using electrical appliance, basic precautions should always be followed to avoid the risk of fire, electric shock and injury to persons including the following:

1. **THIS APP LIANCE IS HOT WHEN OPERATED AND CAN CAUSE SEVERE BURNS IF TOUCHED.**
2. Do not operate the appliance before reading and understanding operating instructions. Failure to operate the appliance according to operating instructions could cause fire or injury.
3. Keep combustible materials, such as furniture, pillows, bedding,papers, clothes, and curtains at least 3 feet(0.9 m) from the front of this appliance and keep away from the sides and the rear.
4. **WARNING:**To avoid overheating, do not cover the heater.The clearance may be inadequate when installed in a recreational vehicle with the slide-out closed.
5. Risk of burns. Power to the appliance should be turned off, and the appliance should be allowed to cool before servicing.To disconnect the appliance from the power supply, turn off the controls, and then remove the plug from the outlet.
6. Do not install damaged, incomplete, or substitute components.
7. Young children should be carefully supervised when they are in the same room with the appliance.Toddlers, young children, and others may be susceptible to accidental contact burns.
8. To prevent accidental swallowing, media bed kits should be kept away from children and infants.
9. The remote control contains batteries. Keep them away from children. If swallowed, seek medical assistance immediately.
10. Do not recharge the batteries. Do not mix the batteries with the used ones or other battery types, store them with hazardous or combustible materials, or place loose batteries in a pocket, purse, or other container containing metal objects.
11. Ensure that you have incorporated adequate safety measures to protect infants/toddlers from touching hot surfaces.
12. It is imperative that the control compartments, circulating blower,and its passageway in the appliance are kept clean.The appliance should be inspected before use and at least annually by a qualified service person.
13. Under no circumstances should this appliance be modified.
14. Do not use this appliance if any part has been in contact with water. Immediately call a qualified service technician to inspect the appliance and replace any part of the control system which has been in contact with water.
15. Do not operate the appliance with the glass door removed, cracked, or broken. A licensed or qualified service person should do the replacement of the glass.
16. Do not strike or slam shut the appliance's glass door.
17. Keep the packaging material out of reach of children and dispose of the material in a safe manner.These are not toys like all plastic bags and should be kept away from children and infants.
18. Servicing should be done only while the appliance is disconnected from the power supply circuit.
19. Always unplug the appliance when not in use.
20. Do not operate this appliance with a damaged cord or plug after the appliance has been defective, dropped, or damaged in any manner.
21. Do not use the appliance outdoors.
22. Never place the appliance where it may fall into a bathtub or other water container.
23. Do not run cord under carpeting. Do not cover the cord with throw rugs, runners, etc.Arrange the cord away from high-traffic areas to avoid a tripping hazard.
24. Connect to properly grounded outlets only.
25. Do not insert or allow foreign objects to enter any ventilation or exhaust opening as this may cause an electric shock or fire or damage the appliance.
26. To prevent a possible fire, do not block air intakes or exhaust in any manner. Do not use it on soft surfaces, like a carpet, where openings may become blocked.
27. Always plug appliances directly into a wall outlet/receptacle. Never use an extension cord or relocatable power tap (outlet/power strip).
28. The product is classified as a Class I appliance,This appliance, when installed must be electrically grounded in accordance with the current.
29. Unauthorized modification of the power cord is prohibited to prevent electrical hazards or safety incidents.

SAVE THESE INSTRUCTIONS

2. INSTALLATION INFORMATION

PACKAGE CONTENTS

Part	Description	Quantity	Part	Description	Quantity
W	Fireplace Insert	1	Z	Screw	12 PCS
Y	Side Trim	2	V	Remote Control	1

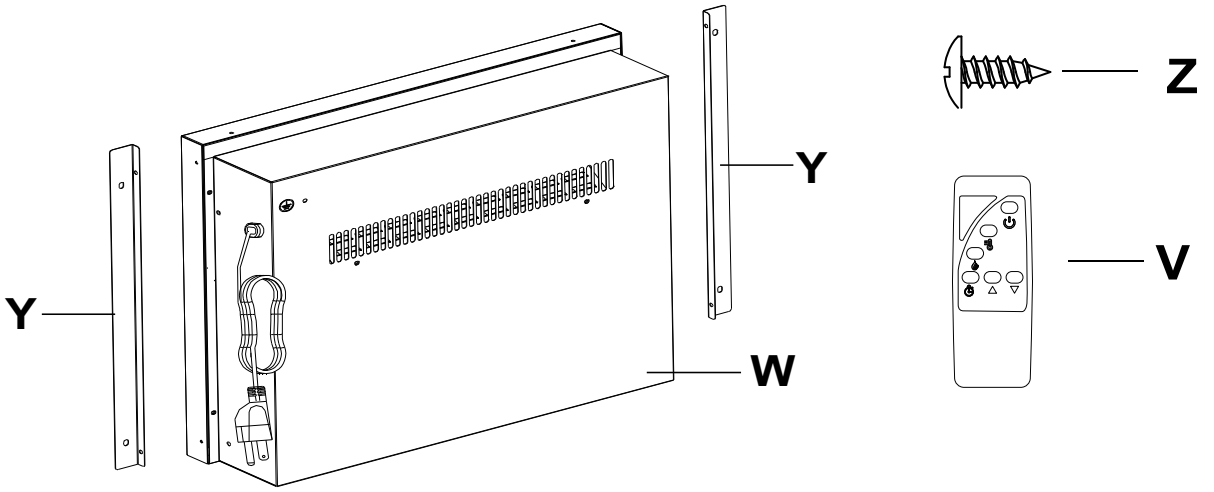

TOOLS REQUIRED

Phillips screwdriver (**not provided**)

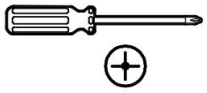

ASSEMBLY

2.1 Attaching the metal trims

- Align and attach two side trims (Y) to both sides of the fireplace insert (W) respectively with the right angle side facing the front of the unit, using two screws (Z) per trim.

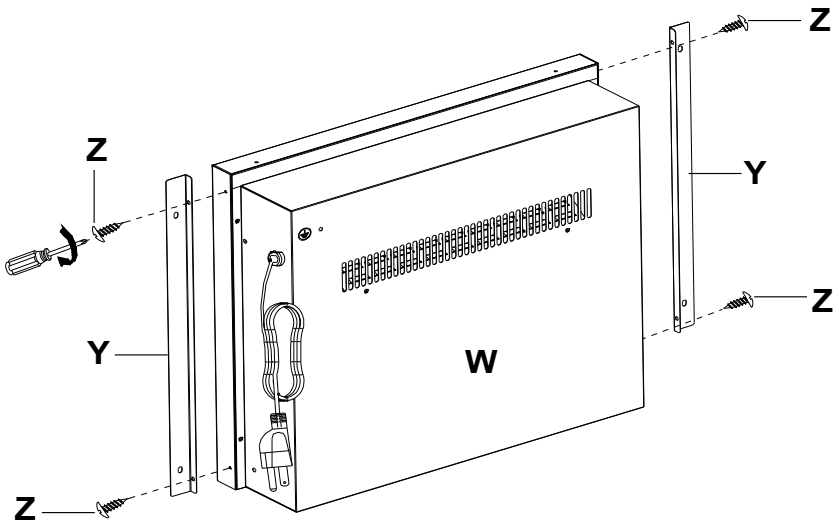

2.2 Installing the fireplace insert

- Carefully set the fireplace insert (W into the back of the mantel and center it in the opening. Use care not to scratch the wood.Check the alignment, and then attach the fireplace insert (W) to the mantel by inserting the screws (Z) through the drilled holes on the trims (Y) and securely screw into place using a Phillips screwdriver.

NOTE:DO NOT attempt to install the insert from the front of the mantel - it will not fit.

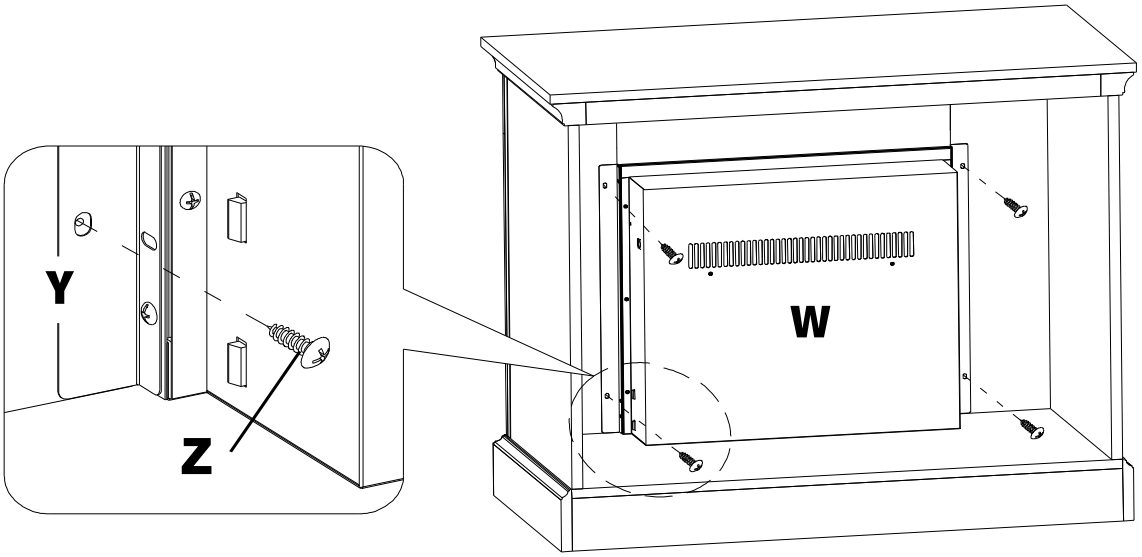

3. OPERATING INSTRUCTIONS

Read all instructions and warnings prior to operating the appliance.

Ensure that all controls are in the "**OFF**" status before plugging the appliance into a properly grounded electrical outlet.

This appliance is for use on 120 Volts. The appliance has a 3-prong grounded plug. If your electrical outlet has only 2 slots, you will have to use an adapter to convert from the 3-prong power cord to a 2-slot receptacle. The green grounding plug extending from the adapter must be securely connected to a permanent ground such as a properly grounded outlet box. The adapter should only be used if a proper 3-slot receptacle is not available.

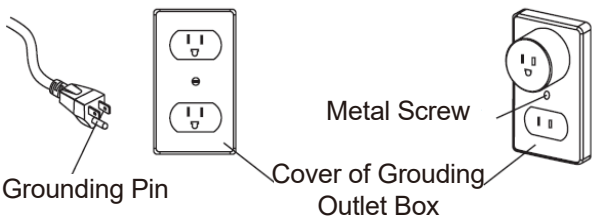

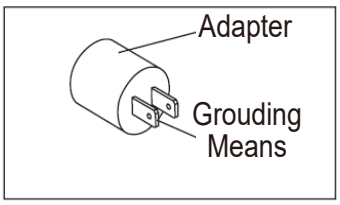

NOTE: Adapters are not allowed for use in Canada.

WARNING: Avoid using an extension cord because the extension cords may overheat and cause a risk of fire. However,If an extension cord MUST be used, the cord must be No. 14AWG minimum size and rated not less than 1875 Watts. The extension cord must be a 3-prong cord with grounding type plug and cord connection and should not exceed 20' (6m) in length.

US-3Pin POLARIZED PLUG

This product is equipped with a 3-pin polarized plug as shown,Connect to properly grounded outlets only.This unit is for use on 120 volts only. For your safety, please always plug the unit into a wall outlet receptacle.An extension cord or relocatable power tap (outlet/power strip)should never be used.

Do not share a socket with other appliances when using electric fireplaces, please use a dedicated socket.

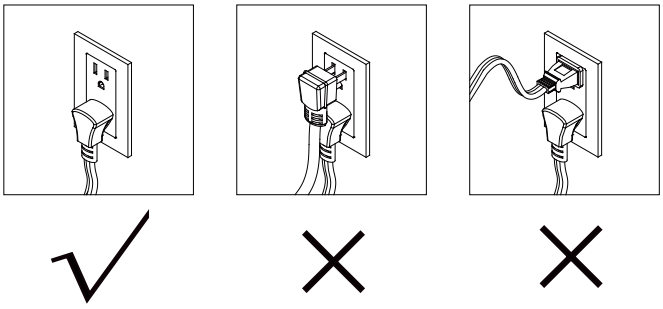

Never use with an extension cord or relocatable power tap (outlet / power strip).

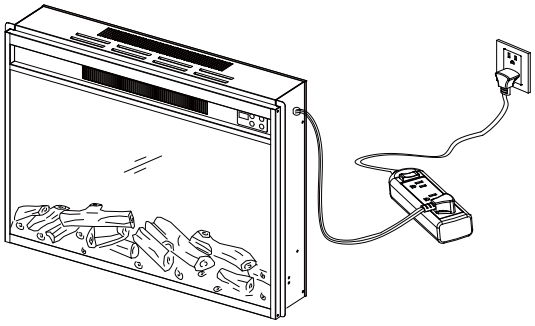

A 15 AMP circuit is required to operate this appliance. If the breaker trips when the appliance is running, you may need to move the appliance to another location or unplug other appliances that are on the same circuit.

The fireplace control functions can be accessed in two ways:

- **Using the control panel, located in the upper right-hand corner of the electric insert.**
- **Using the remote Control.**

The main control panel is located at the top right corner on the front.

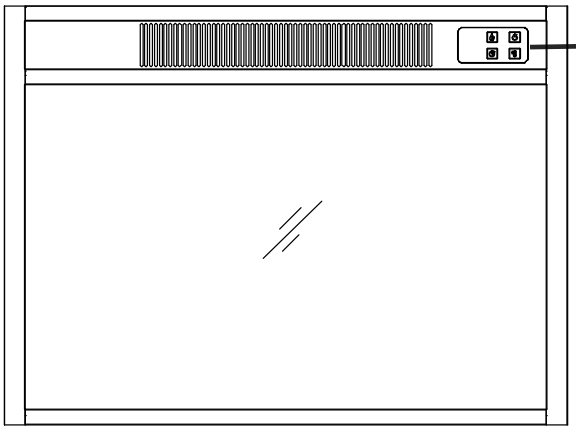

CAUTION: This insert has a front panel made of GLASS! ALWAYS use extreme caution when handling glass. Failure to do so could result in personal injury or property damage.

3a. Manual Control Panel

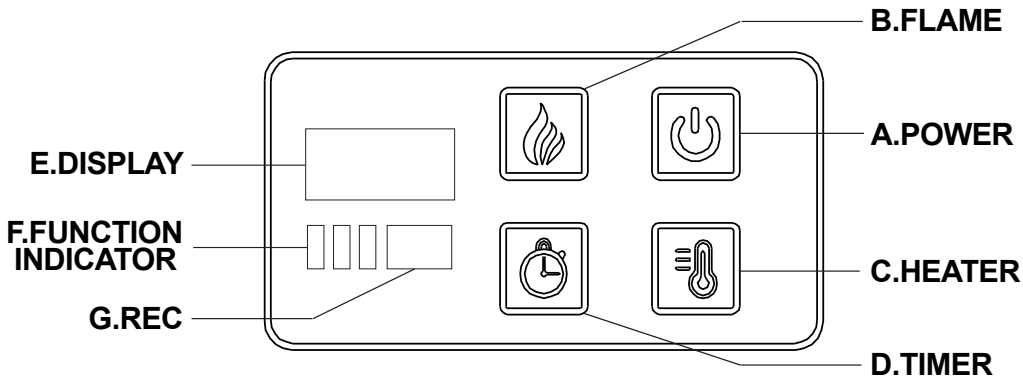

- **POWER (Figure - A):**
  - The POWER button turns the appliance on or off. It has a memory function. The button turns off all functions at once but retains the settings in the memory (except timer). By pressing the button again, the unit will turn on at the same settings.
  - If the TIMER has set and time has expired, all functions will stop. Press the POWER button start the appliance.

■ FLAME (Figure - B):

- Press the flame button(B) to set the flames for different levels of flame height. These flame levels are shown in the Display Screen (E). The flame settings are as follows:

Button Press	Flame Level	Display Value	Fireplace Appearance
1st Press	High	3	Flames Highest,Logs Glow Highest
2nd Press	Medium	2	Flames Medium,Logs Glow Medium
3rd Press	Low	1	Flames Low,Logs Glow Low
4th Press	Sleep	None	Flame motor off, Only Low Glow (sleep mode)

NOTE: The "Sleep" mode is only valid when the heating function is on.

■ HEATER (Figure - C):

- Press the Heater ON /OFF Button(C) to turn on the heater.
- When the heater is on, long press the heater button(C) for 5 seconds to enter the temperature setting mode. In this case, the Function indicator(F) is red, and the Display(E) flashes.
- For temperature settings, see below table for detailed instructions.
- When temperature setting finished, the Display(E) will flash 5 times and exit from the setting status.

Fahrenheit	95°F	70°F	71°F	72°F	.....	91°F	92°F	93°F	94°F
Celsius	35°C	21°C	22°C	23°C	.....	31°C	32°C	33°C	34°C

NOTE:

Press the heating button to turn on the heater, regardless of the ambient temperature, the heater and the fan will be forced to heat up for 3 minutes (for the function test of the machine).

Heating will be automatically paused when the set temperature is reached. If you need to use the heating, please turn up the temperature setting.

- With the heater on and the temperature is displaying with Fahrenheit scale, the indicator is red.
- Gently press and hold the Main Power Button(A) for 5 seconds to enter the temperature scale converting mode.The Function indicator flashes 5 times in red, then changes to green. And the temperature value is displaying with Celsius scale.Repeat the same process to convert from Celsius scale to Fahrenheit scale.

■ TIMER (Figure - D):

- The Timer Button(D) controls both the flames and the heater function.

1. If the heater is operating when the timer is set, then the heater is under the control of the timer.
2. If the flame function is operating when the timer is set, then the timer will control the flame.
3. If both the heater and flames are operating with the timer set, then the timer controls both the flames and the heater.

- **Press the Timer Button(D) to choose the time interval. The interval period is shown in the LCD Screen and the indicator is in blue.For timer settings, see below table for detailed instructions.**

Button Press	1st	2nd	3rd	4th	5th	6th	7th	8th
Timer Interval	30 Minutes	1 Hour	2 Hour	3 Hour	4 Hour	5 Hour	6 Hour	OFF
Display	30	1h	2h	3h	4h	5h	6h	None

■ DISPLAY (Figure - E):

The digital display will show the numbers for the corresponding function of the corresponding operation.

When the function is operating, the display flashes for 5 seconds, then the operation mode is exited and the display turns off. It needs to be activated again to enter the operation mode.

■ **FUNCTION INDICATOR (Figure - F):**

- There are three LED indicators below the LCD screen - red, green, and blue.
- Red LED indicates the unit of the current displaying temperature value is Fahrenheit.
- Green LED indicates the unit of the current displaying temperature value is Celsius.
- Blue LED indicates the timer function is engaged.

3b. Remote Control

REMOTE CONTROL BATTERIES

Press and slide the battery cover on the rear of the remote and remove the cover. Insert 2 new AAA 1.5V batteries into the battery compartment. Ensure that the polarity is correct. **Batteries are not included in the package due to safety during transportation.**

CAUTION: Do not mix old and new battery together in the remote.
Do not mix alkaline, standard (carbon-zinc) or rechargeable(Nickel-cadmium, Nickel-metal, Hydroxide, etc.) battery together.

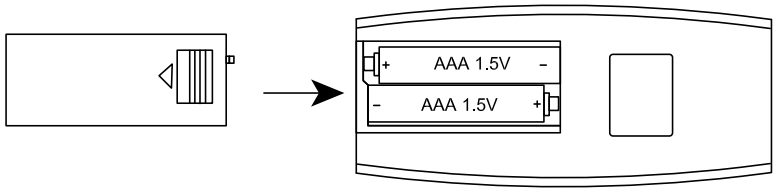

The remote control can be used up to 13 feet (4 meters) away from the heater, The remote control receiver is on the display. For better use, please make sure the remote control is aligned with the display for operation.

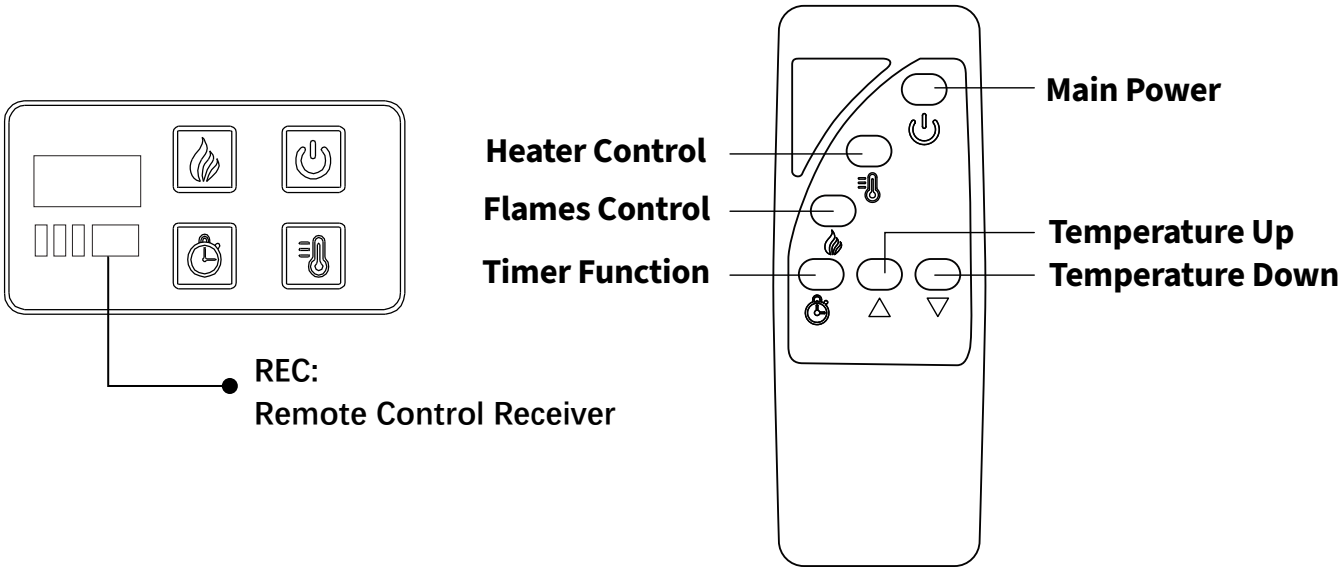

REMOTE CONTROL:

- **Power Button: Same as the control panel operation.**
- **Heating Button: Turn the heater ON/OFF.**
- **Flame Button: Same as the control panel operation.**
- **Timer Button: Same as the control panel operation.**
- **Up/Down Adjustment Buttons: When the heater is ON, press briefly to adjust the temperature.**



Warning: Changes or modifications to this unit not expressly approved by the party responsible for compliance could void the user's authority to operate the equipment.

This device complies with Part 15 of the FCC Rules. Operation is subject to the following two conditions: (1) This device may not cause harmful interference, and (2) this device must accept any interference received, including interference that may cause undesired operation.

NOTE: This equipment has been tested and found to comply with the limits for a Class B digital device, pursuant to Part 15 of the FCC Rules. These limits are designed to provide reasonable protection against harmful interference in a residential installation. This equipment generates, uses and can radiate radio frequency energy and, if not installed and used in accordance with the instructions, may cause harmful interference to radio communications.

However, there is no guarantee that interference will not occur in a particular installation. If this equipment does cause harmful interference to radio or television reception, which can be determined by turning the equipment off and on, the user is encouraged to try to correct the interference by one or more of the following measures :

- Reorient or relocate the receiving antenna.
- Increase the separation between the equipment and receiver.
- Connect the equipment into an outlet on a circuit different from that to which the receiver is connected.
- Consult the dealer or an experienced radio/TV technician for help.



Temperature Limiting Control

This heater is equipped with a Temperature Limiting Control.

Should the heater reach an unsafe temperature, the heater will automatically turn OFF. **To reset:**

- Unplug the power cord from the outlet.
- Turn the Power Switch on the CONTROL PANEL to OFF. Wait at least 30 minutes.Lower electric firebox internal temperature.
- Inspect the fireplace to make sure no vents are blocked, or clogged with dust or lint. If they are, use a vacuum to clean the vent areas.
- With the Power Switch in the OFF position, plug the power cord back into the outlet.

If it switches off again, UNPLUG THE HEATER RIGHT AWAY!

Have the outlets, wiring, and breaker box inspected by a professional. Make necessary repairs before using the heater.

4. CARE AND MAINTENANCE



- **ALWAYS** turn the appliance **OFF** and **unplug the power cord from the outlet** before cleaning, performing maintenance, or moving this fireplace. Failure to do so could result in **electric shock, fire, or personal injury.**
- NEVER immerse the product in water or spray with water. Doing so could result in electric shock, fire, or personal injury.
- **Risk of electric shock! DO NOT OPEN! Replace parts contact our customer service team for help first !**

The blower motor and the flame motor per-lubricated for a durable using time and need no further lubrication or maintenance. To remove any accumulation of dust or debris, the soft brush attachment of a vacuum cleaner should occasionally be used to clean the outlet grille of the fan heater.

- Use a soft, clean cloth that will not scratch the surface when dusting.
- Use a clean soft cloth dampened with warm water to clean the fireplace surface.DO NOT use household or abrasive cleaners, as these products may damage the surface.
- When cleaning the glass viewing screen use a non-abrasive damp cloth with liquid cleaner or soft soap if necessary; DO NOT use cleaning powders or any other substance with abrasives since these substances will scratch glass.
- Under no circumstances should this product be operated with a broken or chipped glass panel.
- Do not strike or slam the glass.
- In the event that your appliance is stained or otherwise damaged during use, we recommend that you call a professional to it.
- When not in use please unplug the cord from the outlet to prevent any damage or accident.

5. LIMITED WARRANTY

This warrant to the original purchaser that this product is free from defects in material and workmanship as of the date of purchase and that it will, under normal use and proper care, remain so for one year from the date of purchase. Missing or initially defective parts will be replaced free of charge during the period of this limited warranty. If parts are unavailable, comparable replacement of refund will be given. **The original dated sales receipt is required for all warranty claims.** This warranty does not cover damage which has occurred during transport from the point of purchase to the consumer's home. This warranty does not cover glass, light bulbs, batteries, transportation, labor, or other issues not associated with the manufacture of the product.

This product is for the residential use only. Any and all commercial use of this product voids all warranties, and frees the manufacturer from all liability.

Read and understand all assembly and operating instructions, and all safety information and warnings, before use. The following will void this warranty: Damage caused from tampering with,modifying, or altering the fireplace insert in any manner; Damage due to incorrect assembly, improper care, misuse, or abuse; Damage from being used with the wrong power source; Water damage; Damage caused from this insert being used outdoors;Damage caused from this insert being used for excessive periods

of time; Damage caused by the insert being used in a commercial application; Damage from use as a primary heat source; Other misuse or abuse not specifically listed herein.

This product is not intended to be used as a primary heat source.It is for supplemental heating purposes only.

6. TROUBLE SHOOTING GUIDE

WARNING: Turn off the appliance, unplug and let cool for at least 15 minutes before attempting to service. Only a qualified professional should attempt to service or repair the appliance.

PROBLEM	POSSIBLE CAUSE	SOLUTION
Simulated Flame Effect is dim or not present.	**1.** Dimmer control button is set too low. **2.** LED strip not functioning. **3.**"Flame wand" has come loose from bracket. **4.**"Flame Wand"is loose from the bracket.	**1.** Push flame button to increase light. **2.** Contact the customer service center. **3.** Remove screws holding back panel in place and remove back panel. Secure end of "Flame wand" back into the support bracket. **4.**Contact the customer service center
The appliance turns off and will not turn back on.	**1.** The overheat protection device in the appliance has been triggered. **2.** House circuit breaker has been tripped.	**1.**Turn all controls off, unplug the appliance, allow the insert to cool down for at least 15 minutes, and then plug in and restart. **2.** Reset house circuit breaker.
The appliance does not turn on when the button is pushed to"ON".	The overheat protection device in the appliance has been triggered.	Turn all controls off, unplug the appliance, allow the insert to cool down for at least 15 minutes, and then plug in and restart.
The display unit on the control panel shows "E3" ,	Sensor high temperature indicating it is in alarm mode.	Unplug the unit from the wall outlet for 15 minutes. After 15 minutes plug the unit back into the wall outlet, and operate as normal.
The display unit on the control panel shows "E2" .	Shorts indicating it is in alarm mode.	Contact customer service center.
The display unit on the control panel shows "E1" ,	Sensor open circuit indicating it is in alarm mode.	Turn off the power and check the socket connection to ensure that the connection is correct and there is no bad contact,plug the unit back into the wall outlet, and operate as normal.
The display unit on the control panel shows "E5" ,	The Smart Life app is not installed, or the Bluetooth function on your smartphone is disabled.	Unplug the unit to reset it to factory settings. Plug it back in to power on, then install the Bluetooth app as described in this manual.
Remote control does not work.	**1.** Low batteries. **2.** The remote control signal cannot be received.	**1.** Change the remote battery. **2.** Operate remote transmitter at a slow measured pace.Press the remote control buttons with an even motion and gentle pressure. **3.** Repeatedly pressing buttons in rapid succession may cause the transmitter to malfunction. **4.** Stand closer to your fireplace. **5.** Remove objects that may block your remote control's ability to communicate with your fireplace.

NOTE: If you experience difficulties, please do not return this product to store. Any missing parts, hardware or assembly problems, please contact the customer service center.