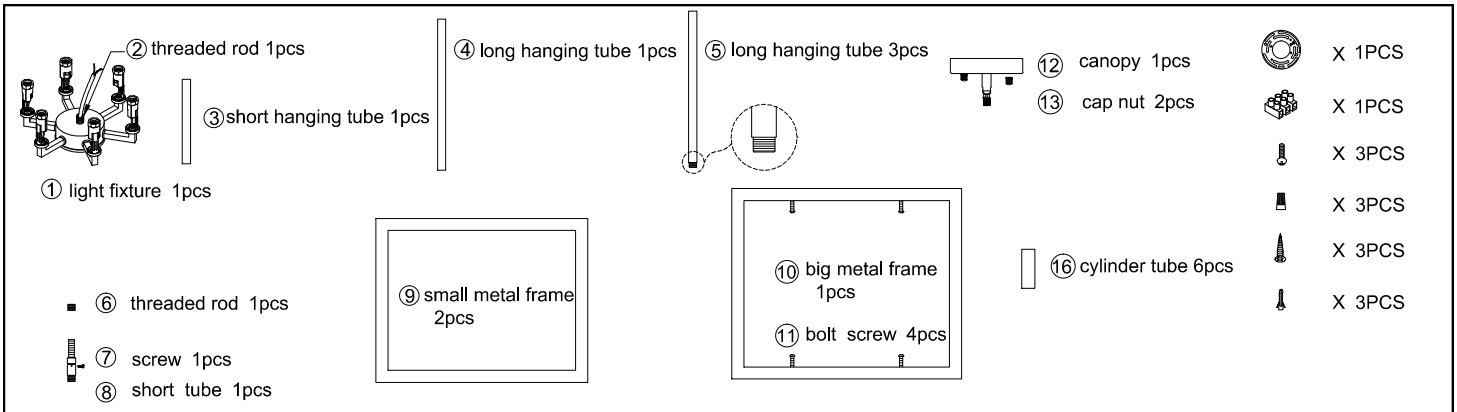

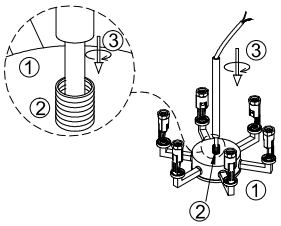

1.Let the wire of the fixture ① go through the tube ③, rotate to fix the tube ③ to the fixture.

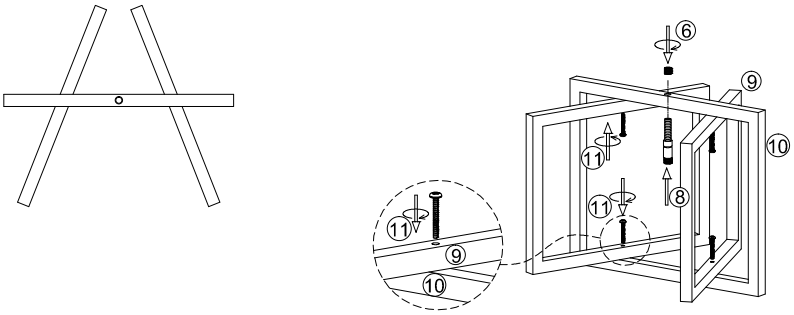

2.Install the small frame ⑨ to the big frame ⑩ with screw ⑪(don't tighten the screw ⑪ this step!)
3.Install the tube 8 to the middle hole of big frame ⑩ with rod ⑥.

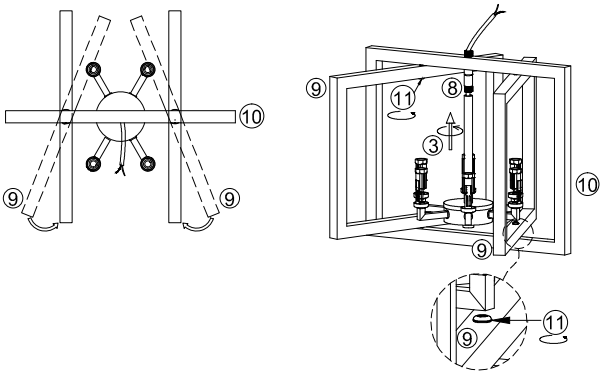

4.Let the wire go through the big frame ⑩, rotate to install the fixture and frame together.
5.Adjust the position of the frame ⑨ 90 degree to the frame ⑩, after that fasten the screw ⑪.

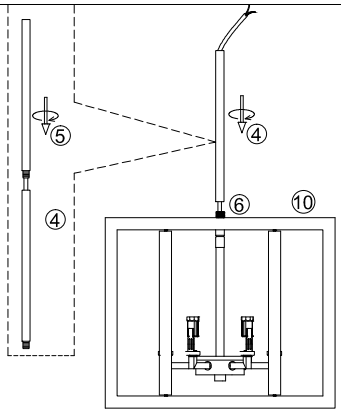

6.Let the wrie go through the tube ④, rotate to fix the tube to the fixture. (can connect more tubes to get the height you need)

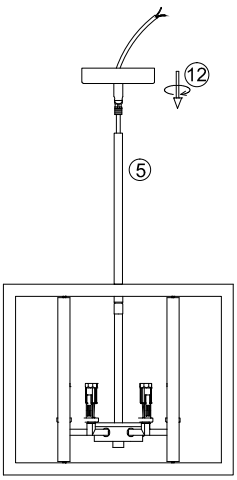

7.Let the wire go through the canopy ⑫ , rotate to install the canopy to the fixture.

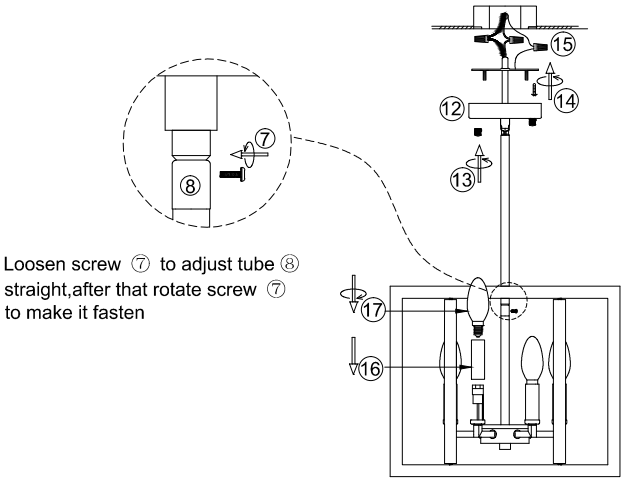

8. Install the bracket to the ceiling junction box with screw ⑭.
9.Connect the wire to your home line with cap connector ⑮.
10.Install the fixture to the bracket with cap nut ⑬.
11.Put the cylinder tube ⑯ on top of bulb holder, install the bulb ⑰.

Please read carefully before installation!!!
Note : Please make sure that the electricity is powered off during installation !
Only a professional electrician should install this kind of product !