60 MIN
Approximate assembly time

Want to see a video on how to assemble this product?
Scan the QR code

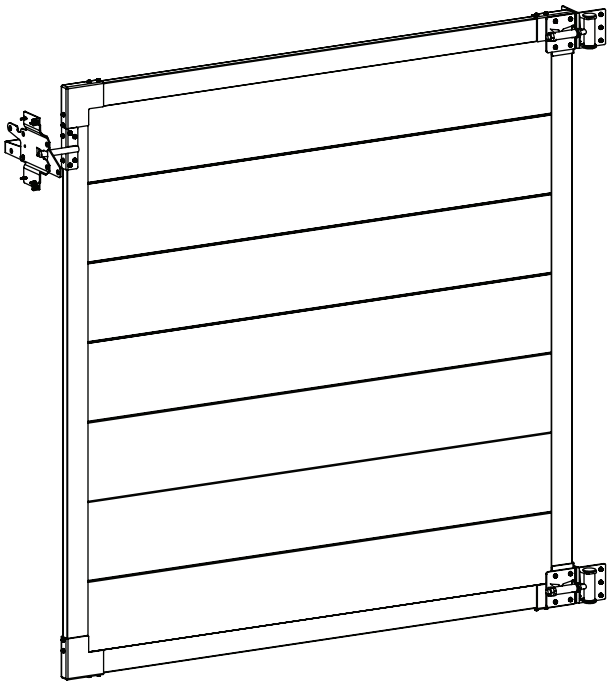

EDGEWOOD

4 FT PRIVACY GATE

(4'H X 4'W)

ASSEMBLY INSTRUCTIONS

BL19119-20

VER. 040726

GENERAL INFORMATION

MISSING OR DAMAGED PARTS?

› Visit Our Website
so we can help you right away!
parts.nychbrands.com

* You can also reach us via phone or email.

Hours of Operation - **Weekdays 9am-5pm EST**

To better help you, **please have the following**

- Your product number (**BL19119-20**)
- Your affected part letters
- Your original product box

NEED ASSEMBLY HELP?

If you are having problems with assembly or installation of this product,
please contact at:

704-892-5222 / 877-234-6196 **hmmm@wambamfence.com**

NEED TO RETURN?

If for some reason you need to return this product, please allow us to help resolve your issues first. If you still decide to return the product, **you will need to initiate the return from the company you originally purchased from.**

BUYING GUIDE

EDGEWOOD FENCE, GATE, AND POSTS

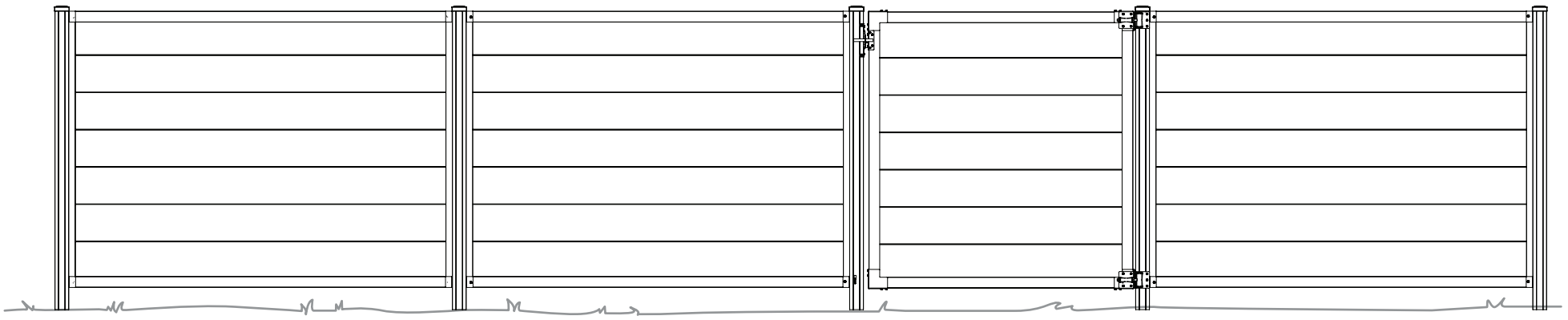

EDGEWOOD GATE

DETAILED DIMENSIONS AND SPECIFICATIONS

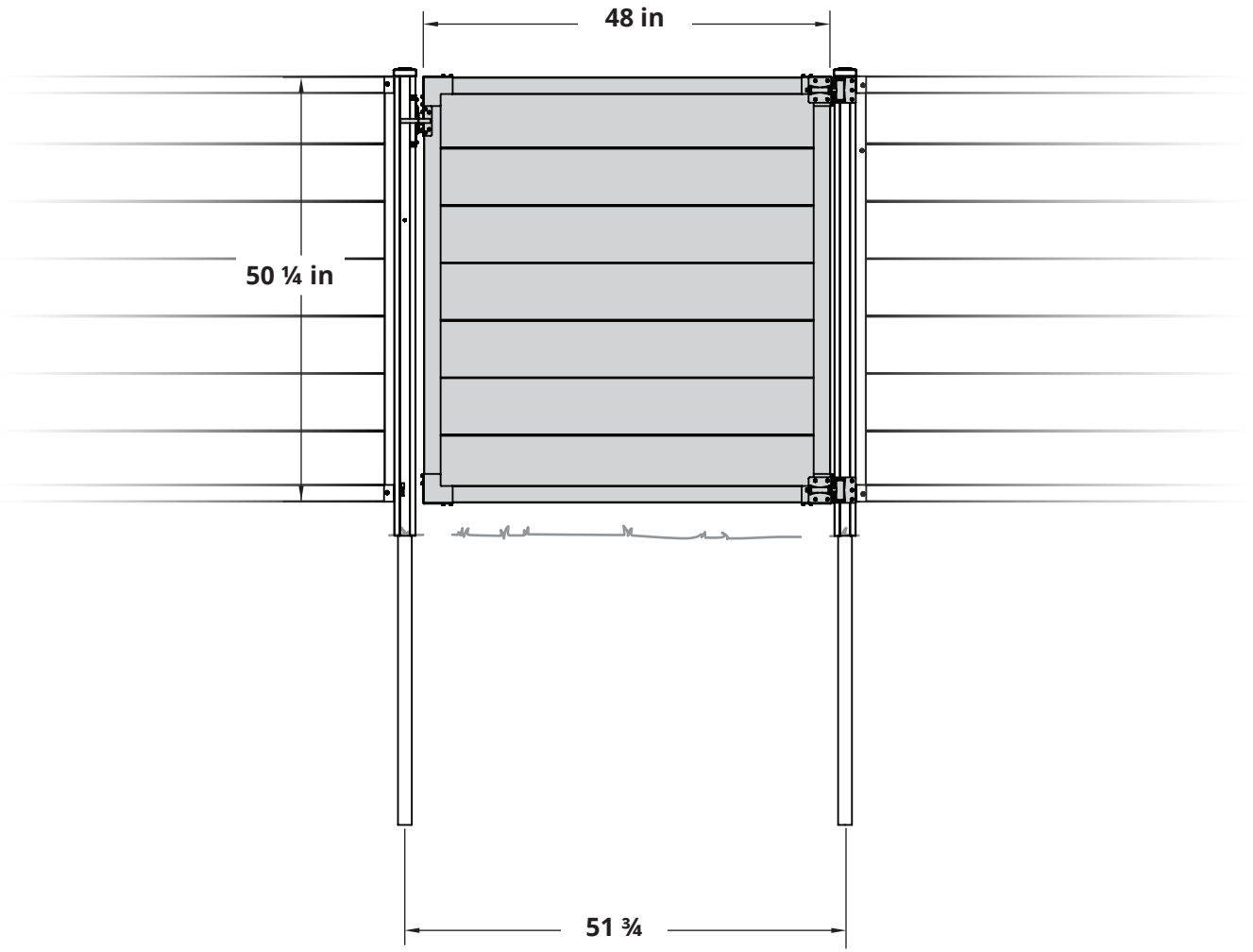

TOOLS NEEDED

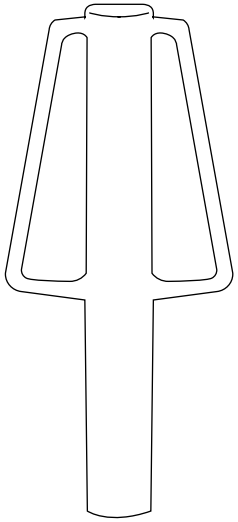

Good

Small Post Pounder (12-18 lbs)

- Best for small projects. These can be purchased online from Amazon, Home Depot, or Lowes

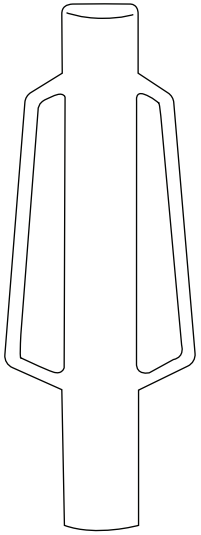

Better

Large Post Pounder (20+ lbs)

- Best for medium sized projects, and may require two people for smoothest operation. These can be purchased online from Amazon, HomeDepot, Lowes, the WamBam website.

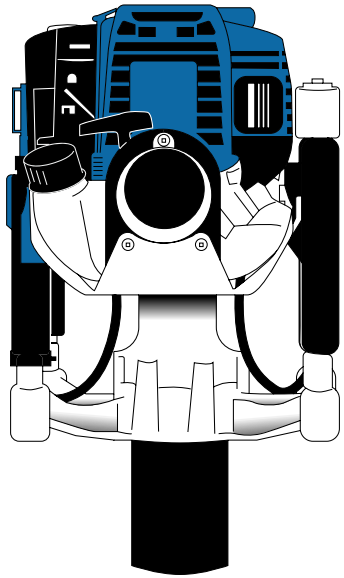

Best

Gas Powered Post Pounder

- Best for large projects as this option requires the least physical labor. Visit our website for rental information. Any comparable gas powered pounder will work as well.

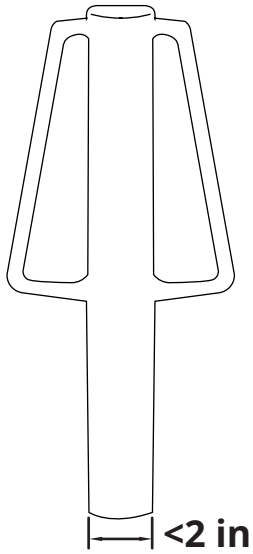

Note: Ensure whichever post pounder you choose has a barrel 2” or greater in diameter.

TOOLS NEEDED

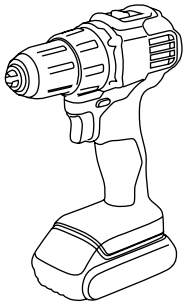

Drill

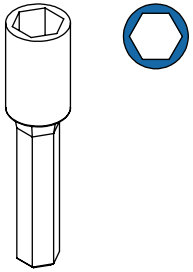

*Included

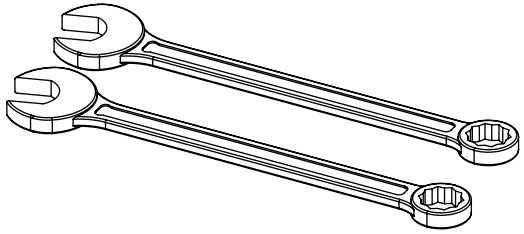

Wrenches

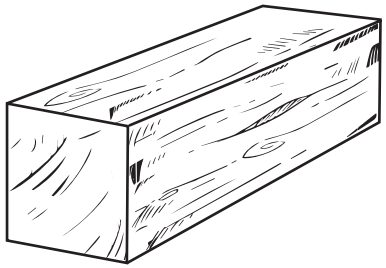

Wooden Blocks
(Optional)

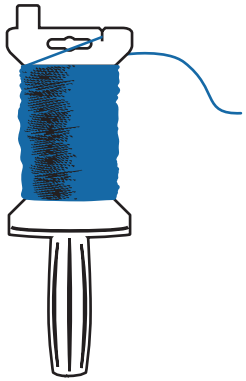

Stringline Reel



Stakes
(for stringline)

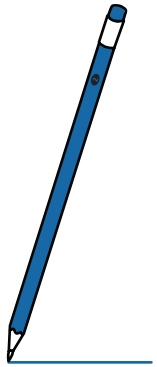

Pencil

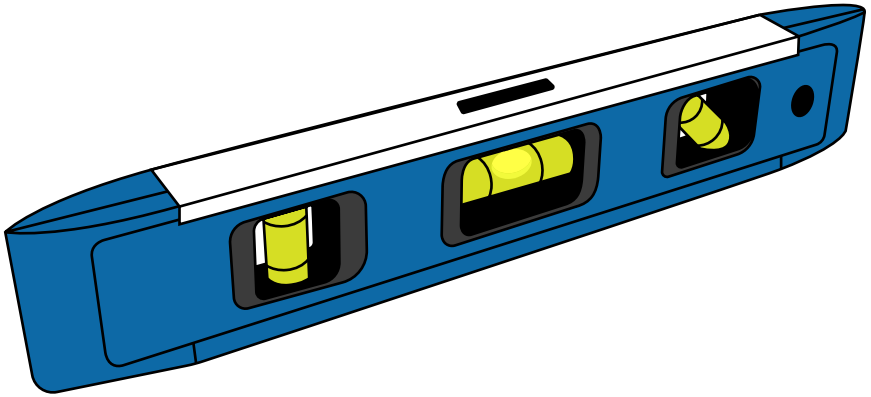

1 ft Level

INCLUDED MATERIALS

A

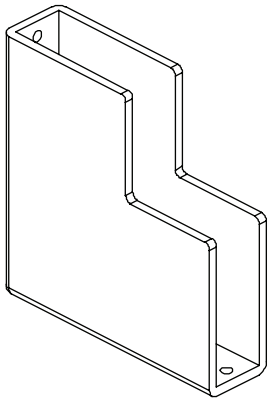

Gate Bracket (4)

B

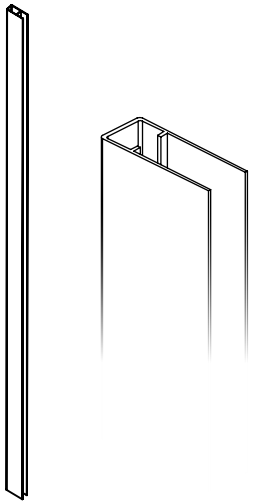

Vertical Stiles (2)
¾" x 2" x 46 ⅛"

C

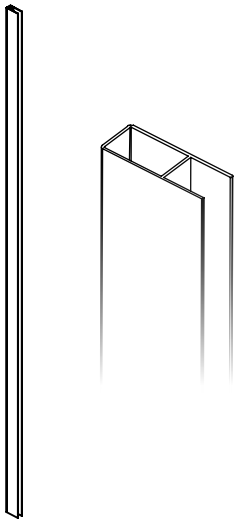

Rail (2)
¾" x 2" x 47 ¾"

D

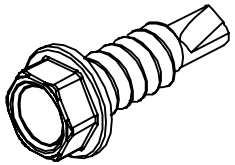

⅝" Black Self-Drilling Stainless Steel Screw (16)

E

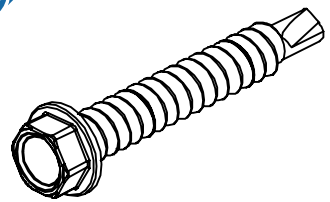

1 ½" Black Self-Drilling Stainless Steel Screw (2)

F

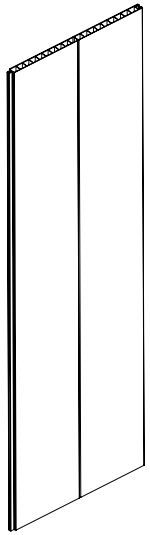

Board (3)
⅝" x 13 ⅞" x 46 ⅝"

G

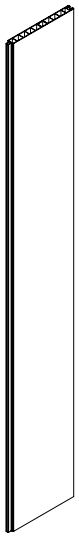

Narrow Board (1)
⅝" x 7 ⅛" x 46 ⅝"

H

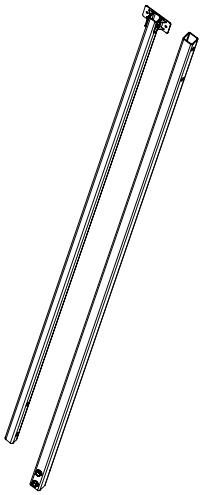

Gate Brace w/ Fasteners (1)

I

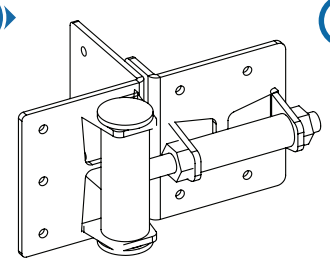

Hinge with Fasteners (2)
with **⅝" Black Stainless Steel Screws** (26)

J

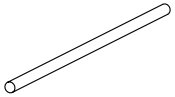

4" Tension Pin (2)

K

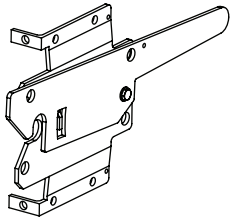

Latch Catch (1)
with **⅝" Black Stainless Steel Screws** (6)

L

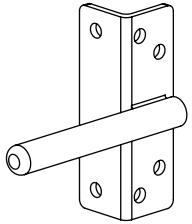

Latch Finger (1)
with **⅝" Black Stainless Steel Screws** (6)

Note: Hinges only open one direction. Take note of which direction you'd like your gate to open before mounting your hinges to your gate.

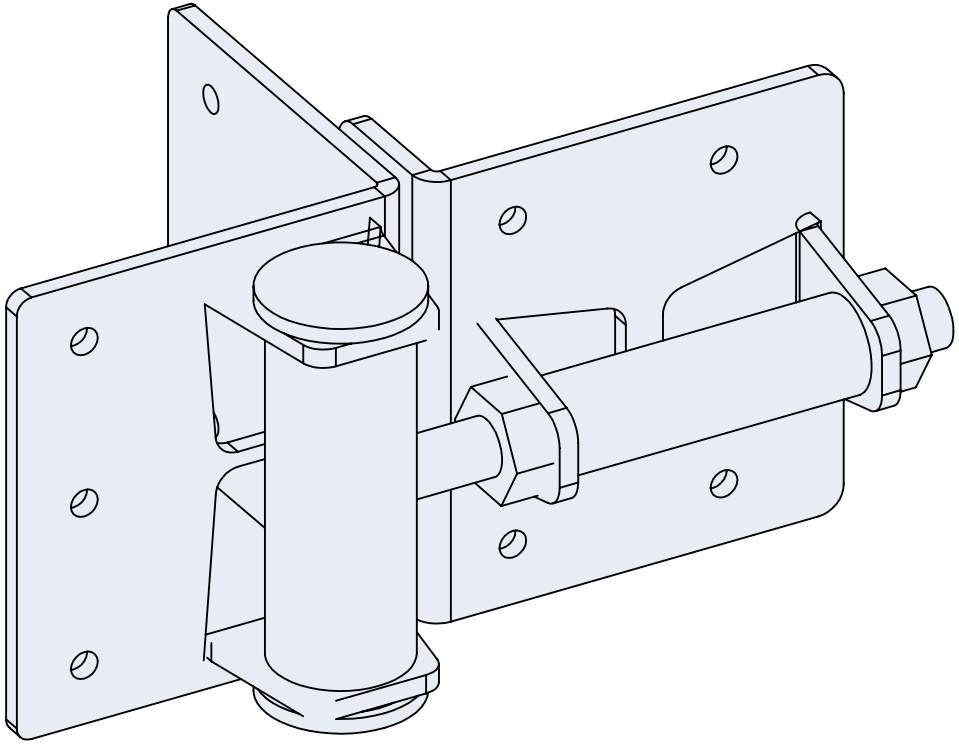

Top View:

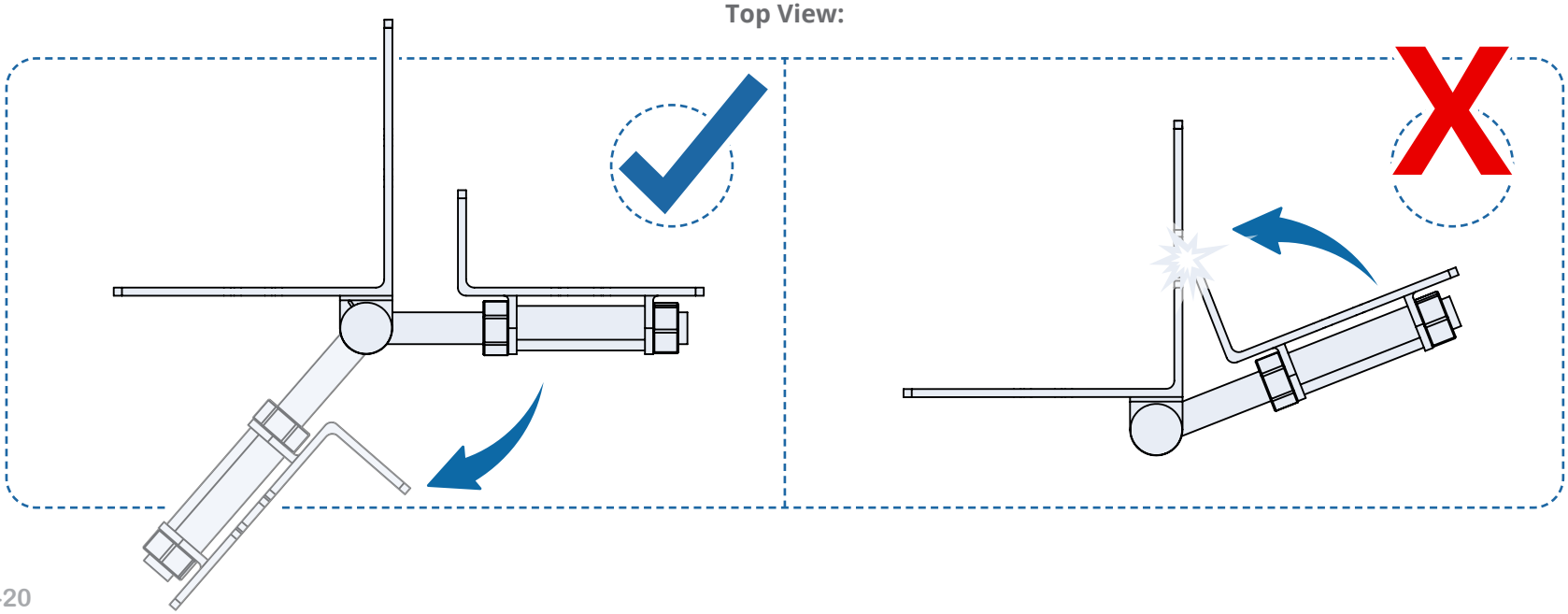

STEP
01 Assemble Gate Sides

Insert the Rail **(C)** all the way into one bottom Gate Bracket **(A)** until it hits the back corners. Ensure the bottom rail hits the back of the gate bracket wall, as illustrated. Press firmly.

Repeat for the other side of the gate.

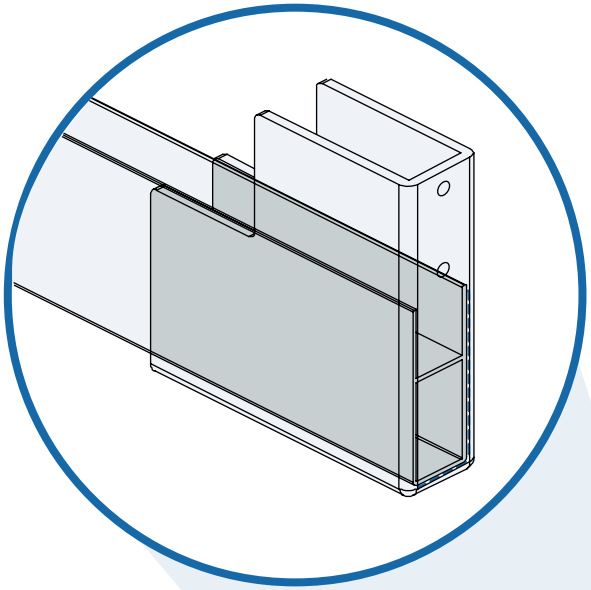

Parts:

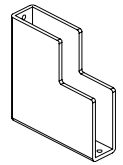

A x2

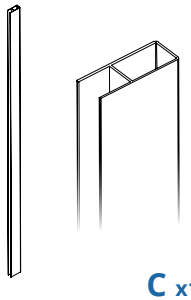

C x1

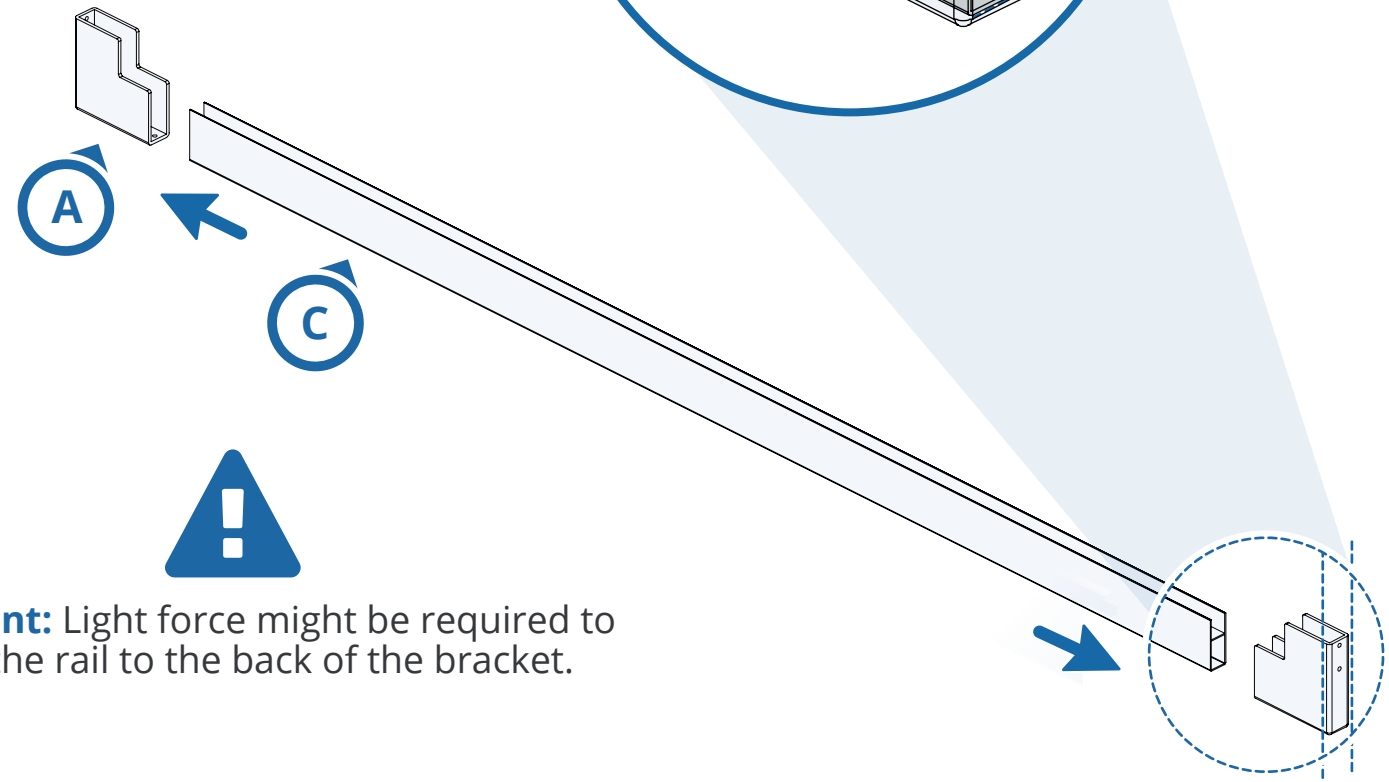

Important: Light force might be required to push the rail to the back of the bracket.

STEP

02 Rail Assembly

Fasten using (4) ⅝” Black Self-Drilling Stainless Steel Screws **(D)**.

Parts:

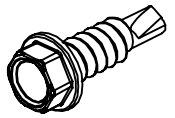

D x4

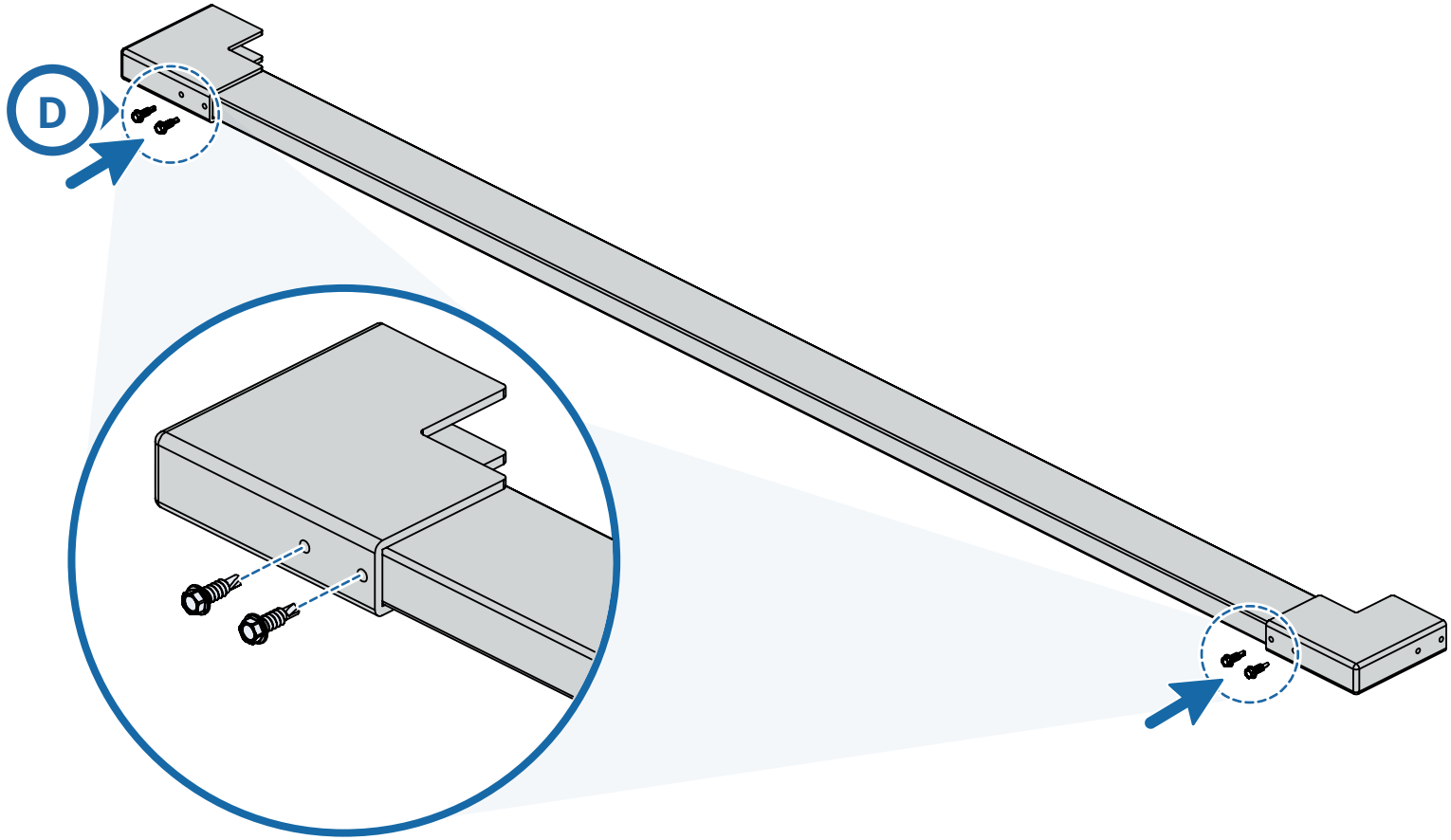

STEP
03 Assemble Gate Sides

Insert the Vertical Stile **(B)** all the way into one bottom gate bracket until it hits the bottom rail. Ensure the vertical stile contacts the bottom rail.

Repeat for the other side of the gate.

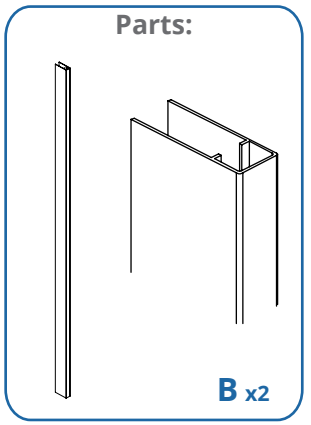

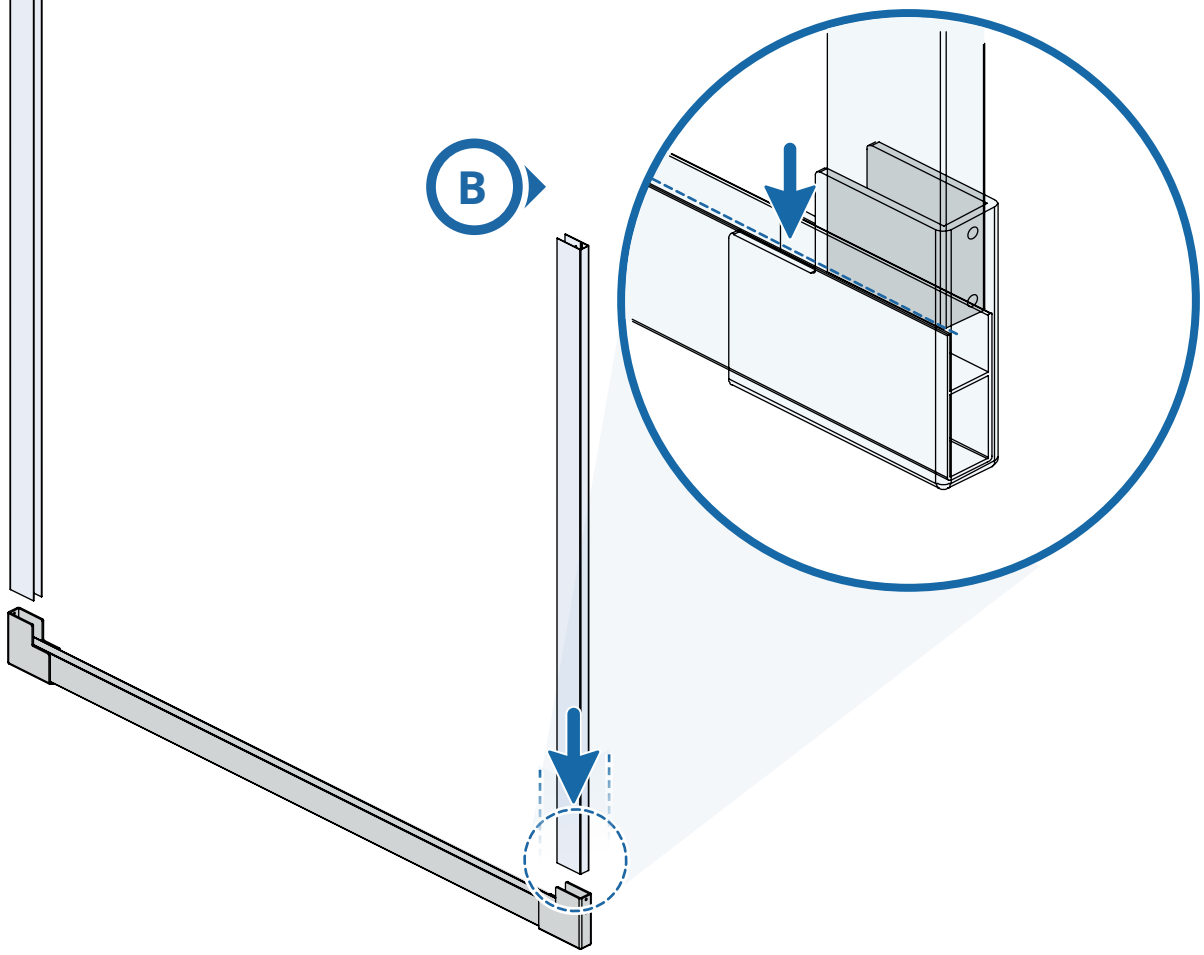

STEP

04 Assemble Frame

Fasten using (3) ⅝” black Self-Drilling Stainless Steel Screws **(D)**

Parts:

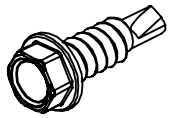

D x3

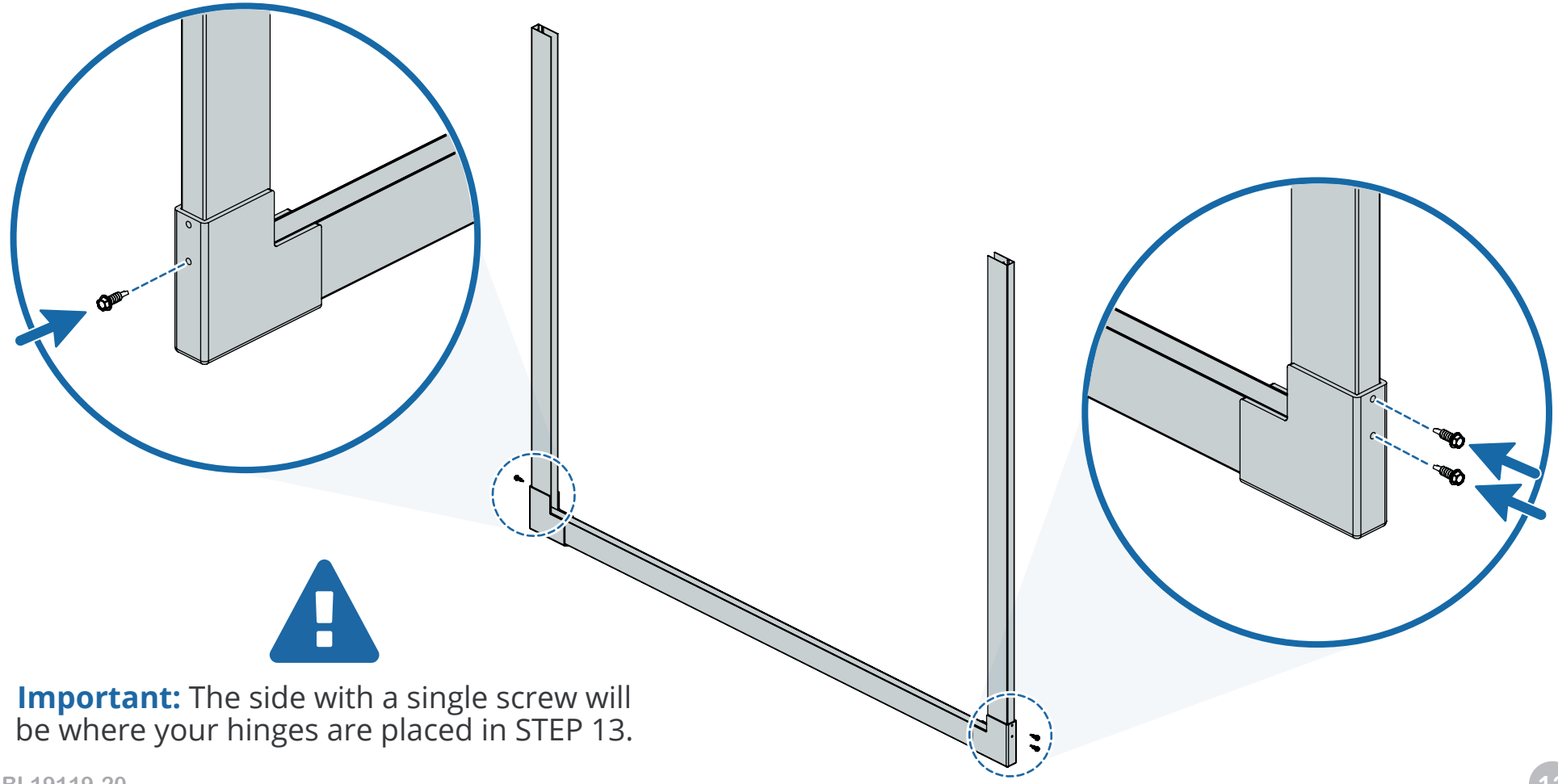

Important: The side with a single screw will be where your hinges are placed in STEP 13.

STEP

05 Insert Boards

Insert (3) Boards **(F)** and (1) Narrow Board **(G)** into the vertical stiles.

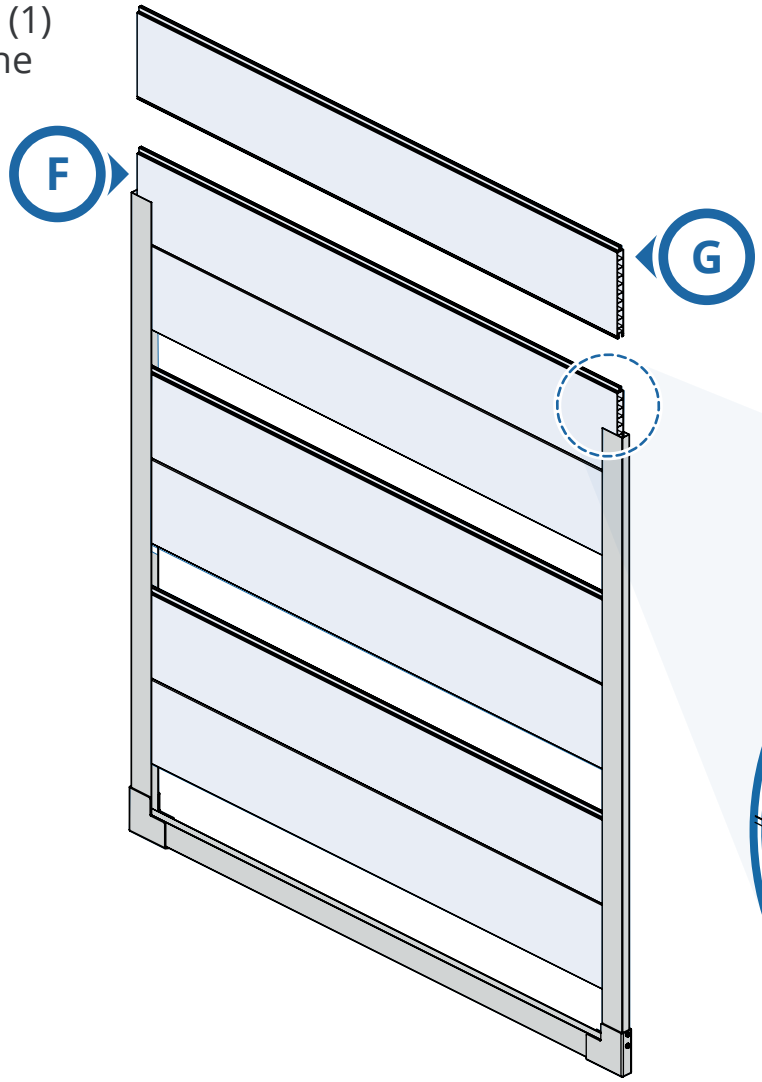

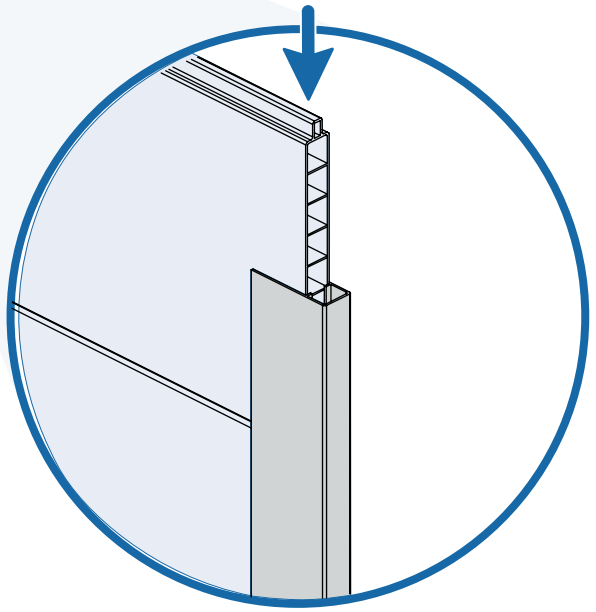

Parts:

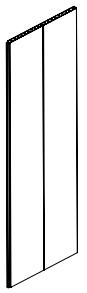

F x3

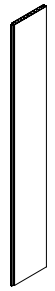

F x1

STEP

06 Assemble Top Rail

Insert the Rail **(C)** all the way into one Gate Bracket **(A)** until it hits the back corners. Ensure the rail hits the back of the gate bracket wall, as illustrated. Press firmly.

Repeat for the other side of the gate.

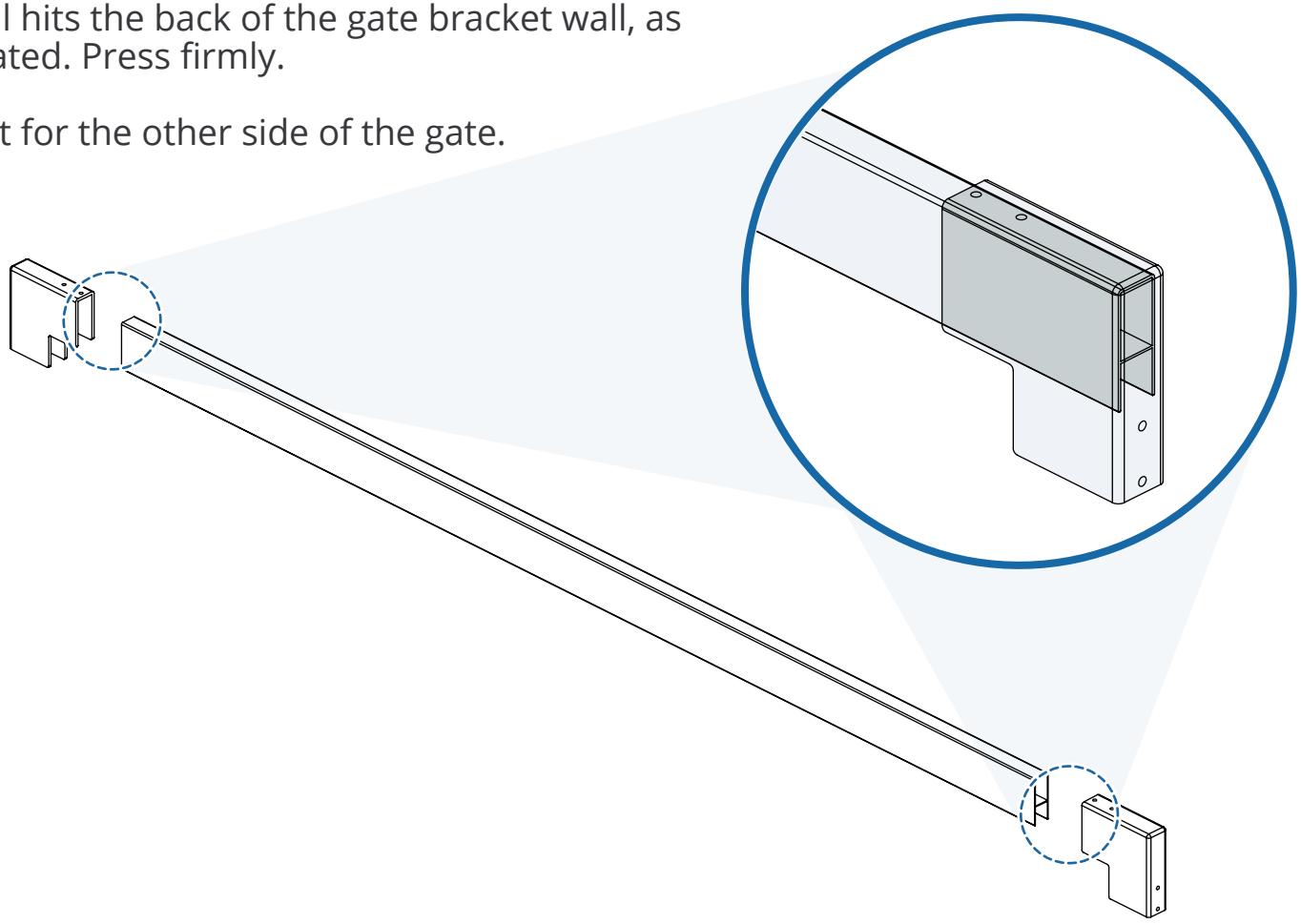

Parts:

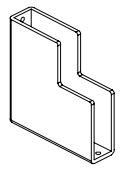

A x2

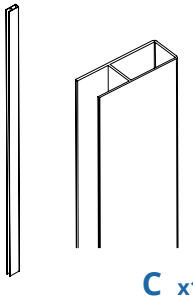

C x1

STEP
07 Assemble Top Rail

Tools Required

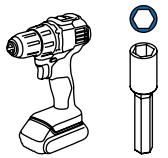

Parts:

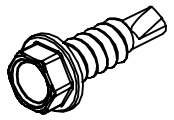

D x4

Fasten using (4) ⅝” Black Self-Drilling Stainless Steel Screws **(D)**.

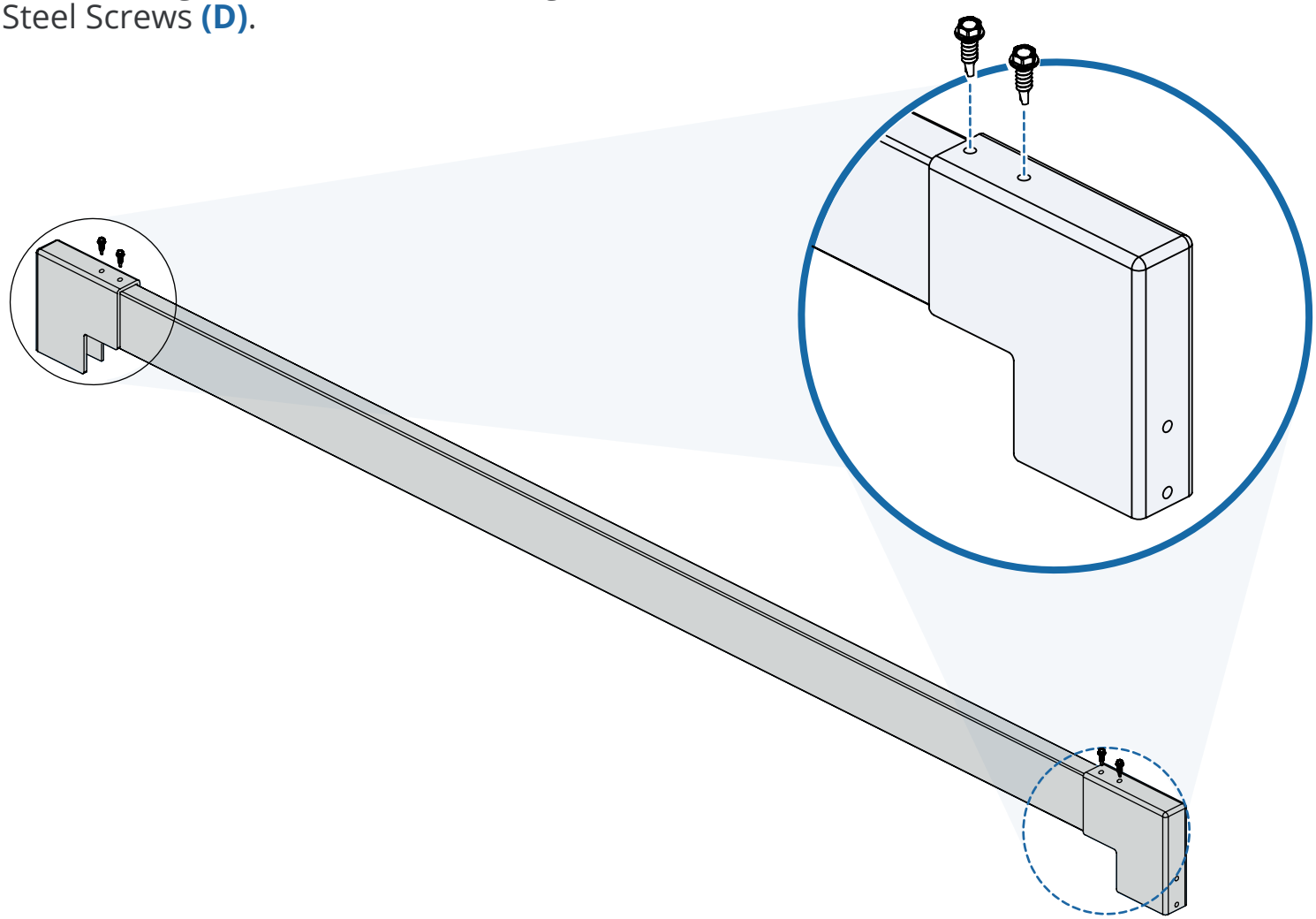

STEP

08 Install Top Rail

Install your pre-assembled top rail onto the gate frame.

Fasten using (3) ⅝" Black Self-Drilling Stainless Steel Screws **(D)**.

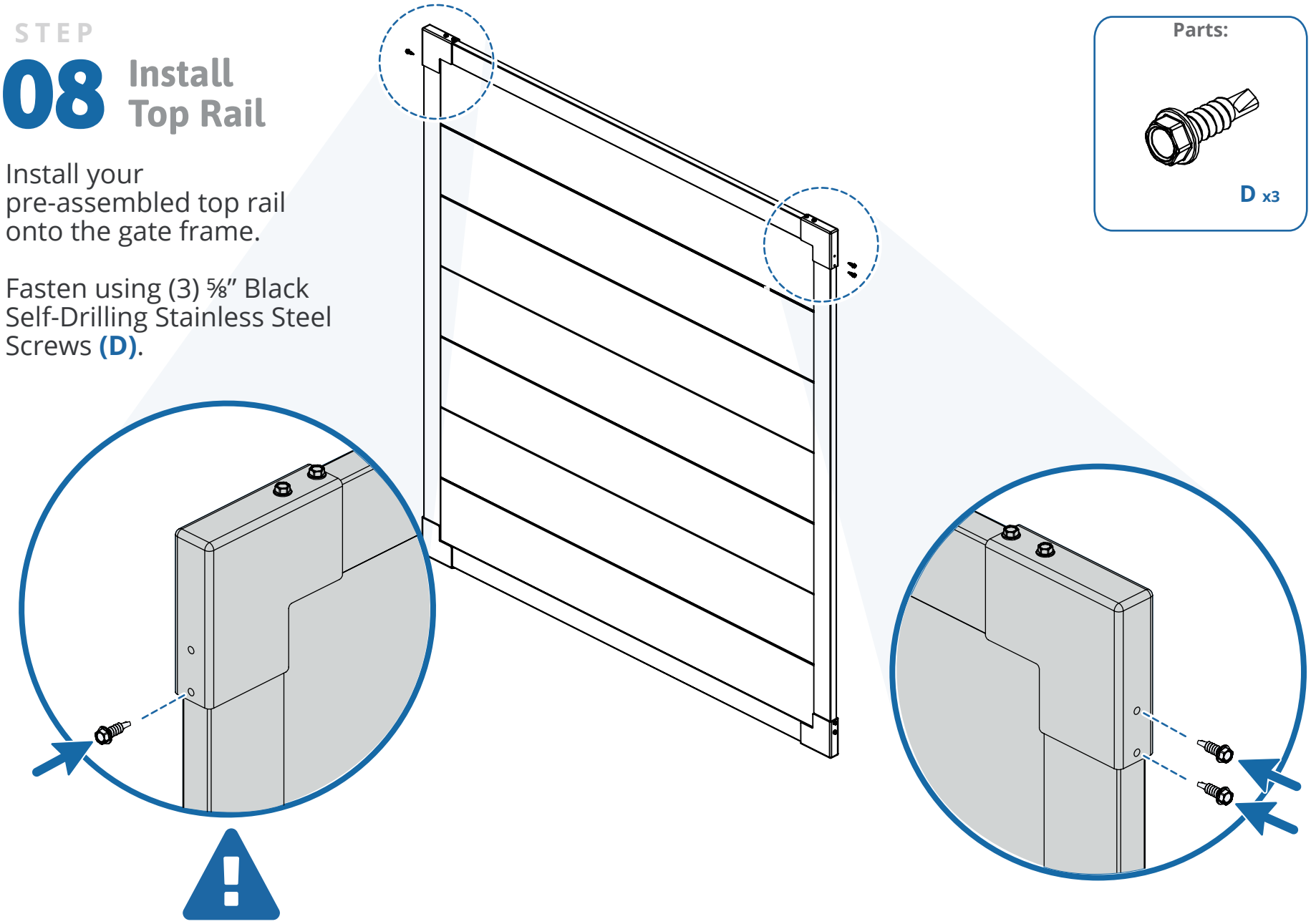

Parts:

D x3

Important: Ensure you use a single screw on the same side of the frame as STEP 4.

STEP
09 Assemble Brace

Parts:

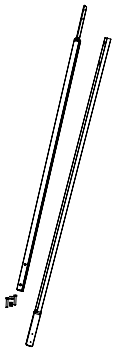

H x1

Align your holes and assemble your Gate Brace **(H)** using the included hex bolts and washers.

Note: Hardware will be wrapped up with the provided gate brace.

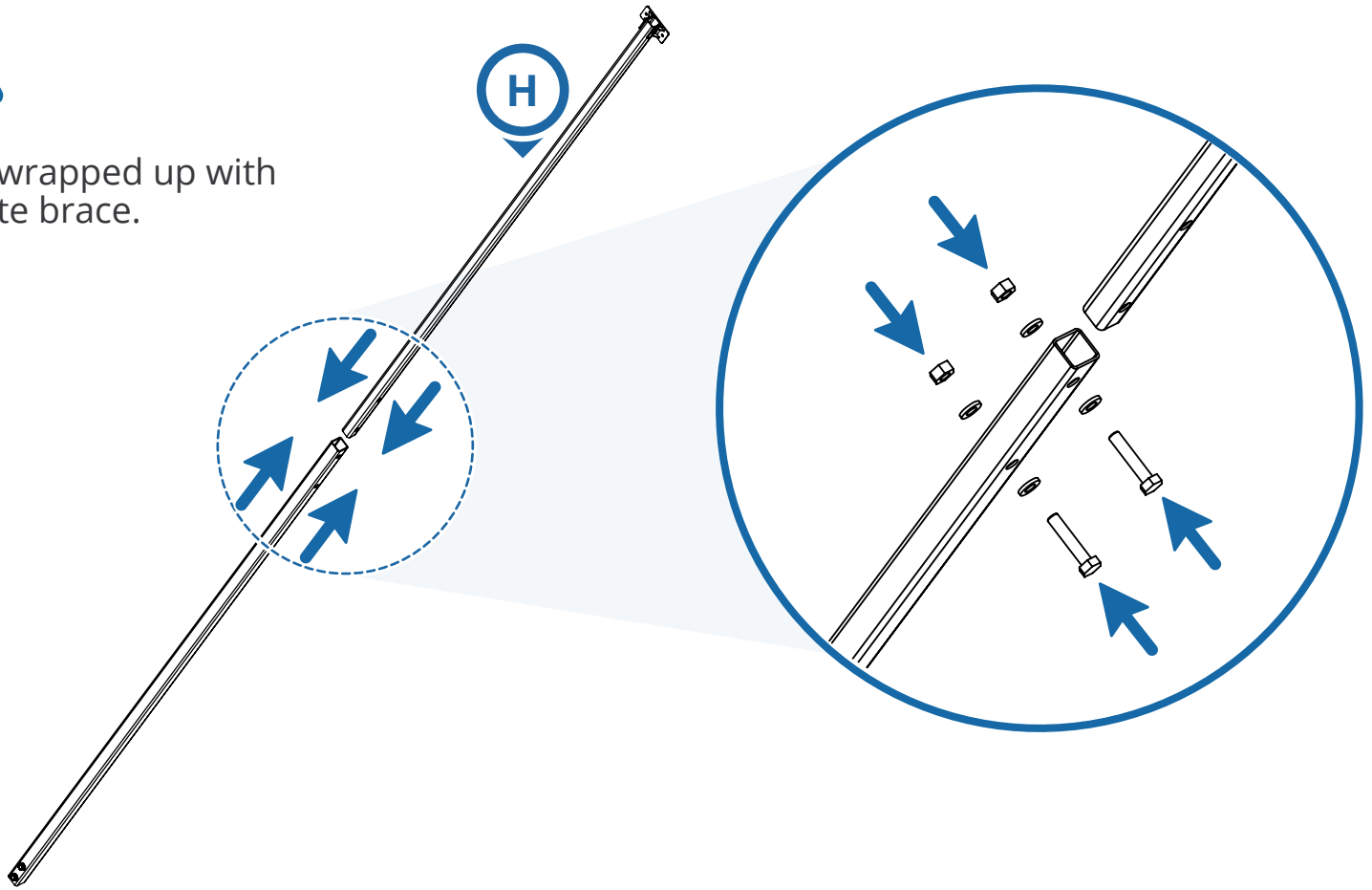

STEP

10 Brace Installation

A. Fasten the brace to your gate at the bottom with (2) 1½" black self-drilling stainless steel screws **(E)**.

B. Fasten the brace to your gate at the top with (2) ⅝" black self-drilling stainless steel screws **(D)**.

Tools Required

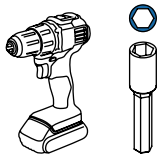

Parts:

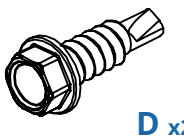

D x2

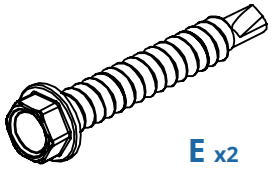

E x2

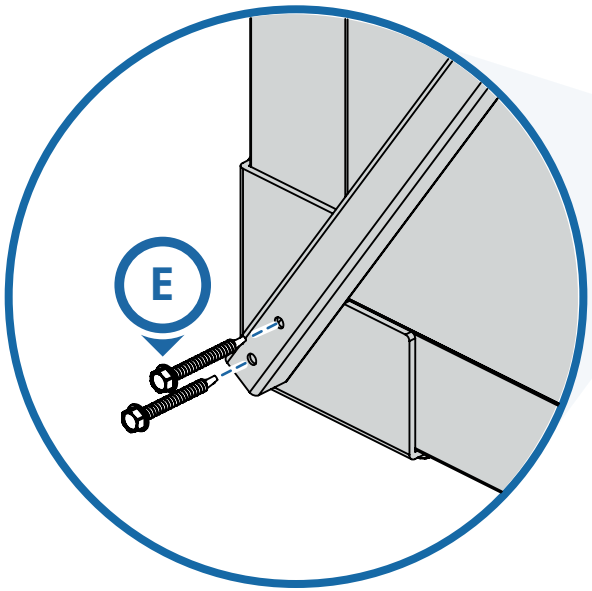

STEP

11 Loosen Hinge

Scan to learn how to use our hinge.

Note: (Optional) For slower self closing

Insert your tension pin **(J)** into a hole on the top of your hinge.

Parts:

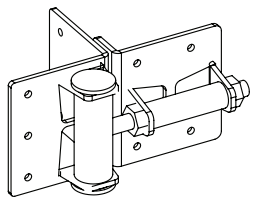

I x1

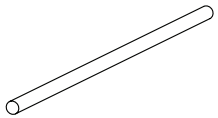

J x1

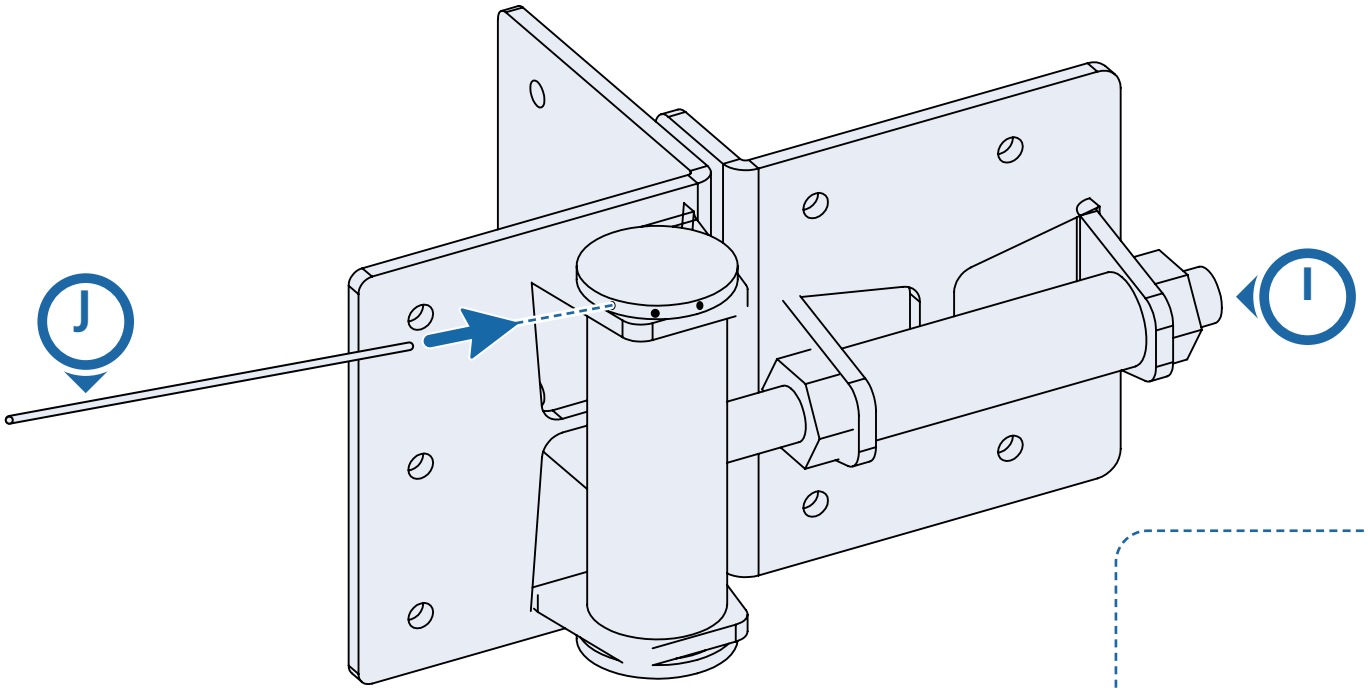

Once you have your tension pin inserted. Rotate your pin to the right, this will take a lot of force.

To loosen the tension: With your tension pin turned all the way to the right, remove the smaller pin. Slowly let the tension pin go back to the left and place the smaller pin in a new hole. This will loosen your hinge and make installation easier.

Top View:

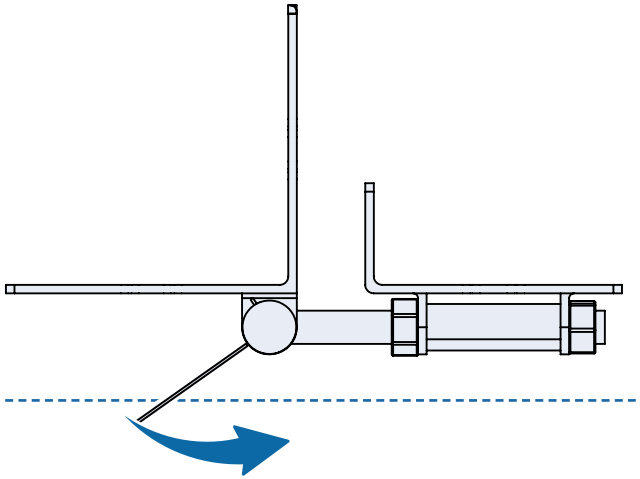

STEP

12 Leveling System

Tools Required:

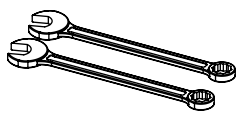

Parts:

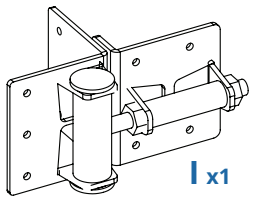

Using your two wrenches loosen or tighten the nuts on the hinge to adjust the spacing between your gate and hinge post.

This can also help you moderately level your gate later on.

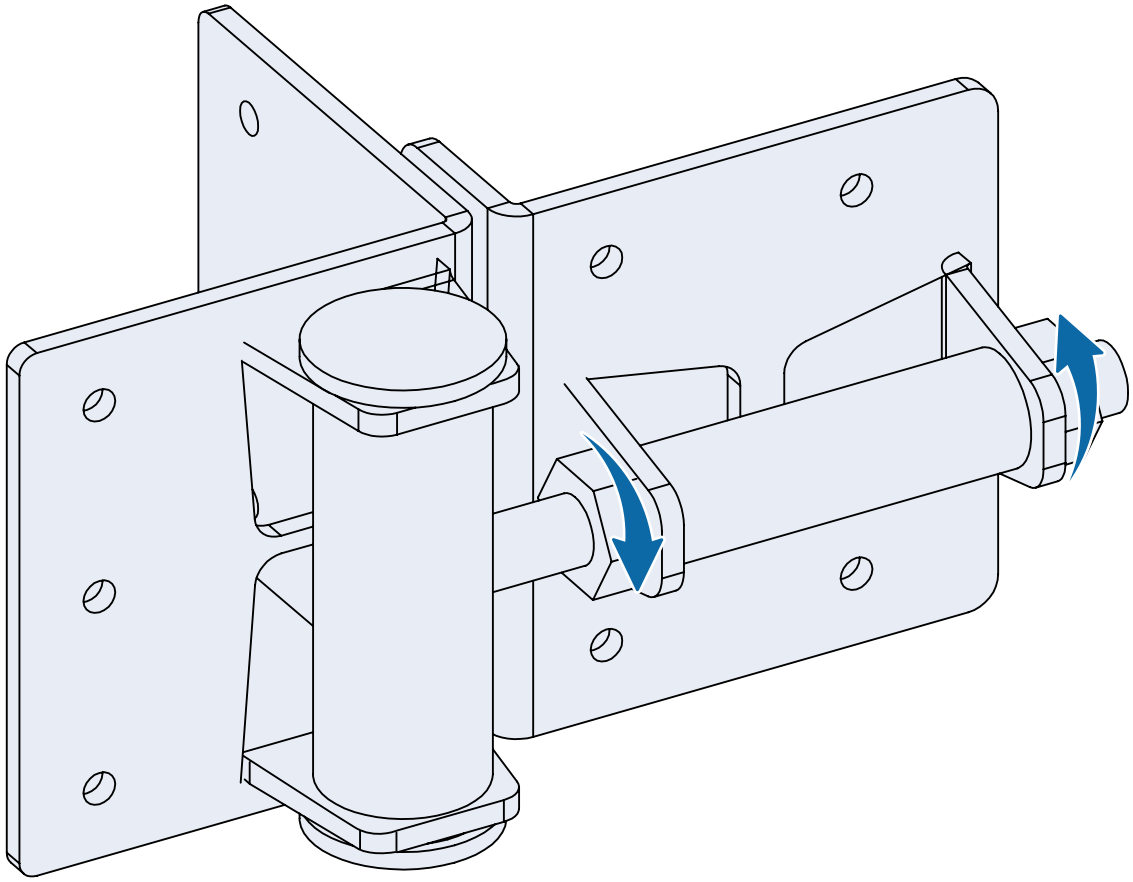

STEP

13 Hardware Installation

Tools Required:

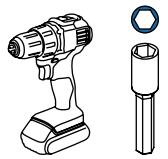

Parts:

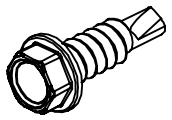

x14
(Screws included with parts I and L)

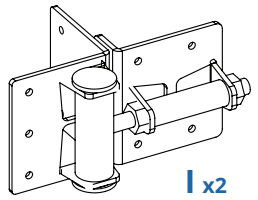

I x2

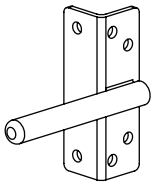

L x1

A. Fasten the Latch Finger **(L)** to the top bracket with (6) ⅝" black self-drilling stainless steel screws.

B. Fasten the Hinges **(I)** to the front of the gate brackets with (8) total ⅝" black self-drilling screws.

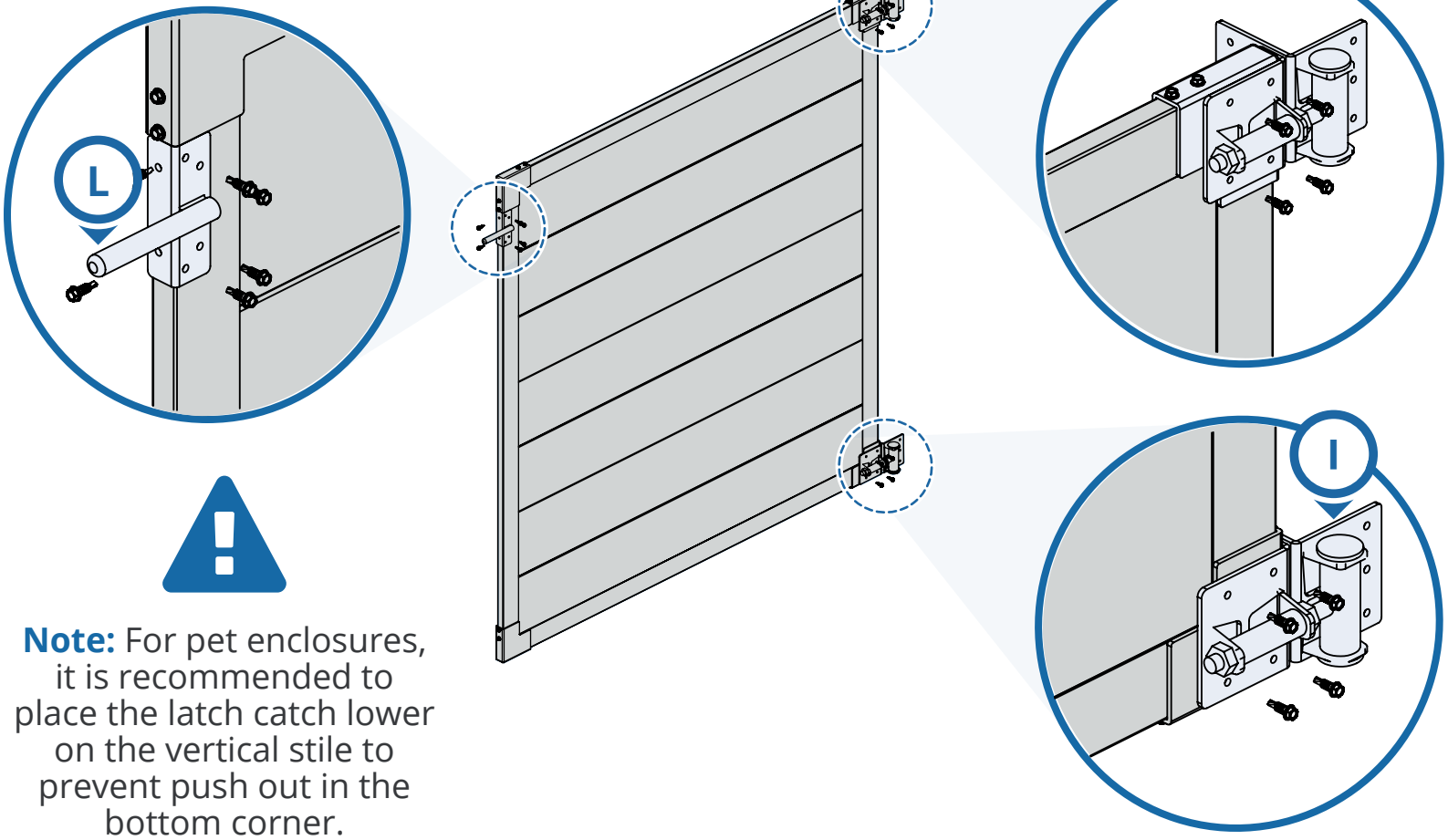

Note: For pet enclosures, it is recommended to place the latch catch lower on the vertical stile to prevent push out in the bottom corner.

STEP

14 Hinge Installation

Tools Required

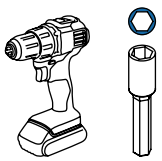

Parts:

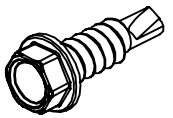

x6
(Screws included with parts I and L)

Fasten hinges to the post with (6) total ⅝” black self-drilling stainless steel screws.

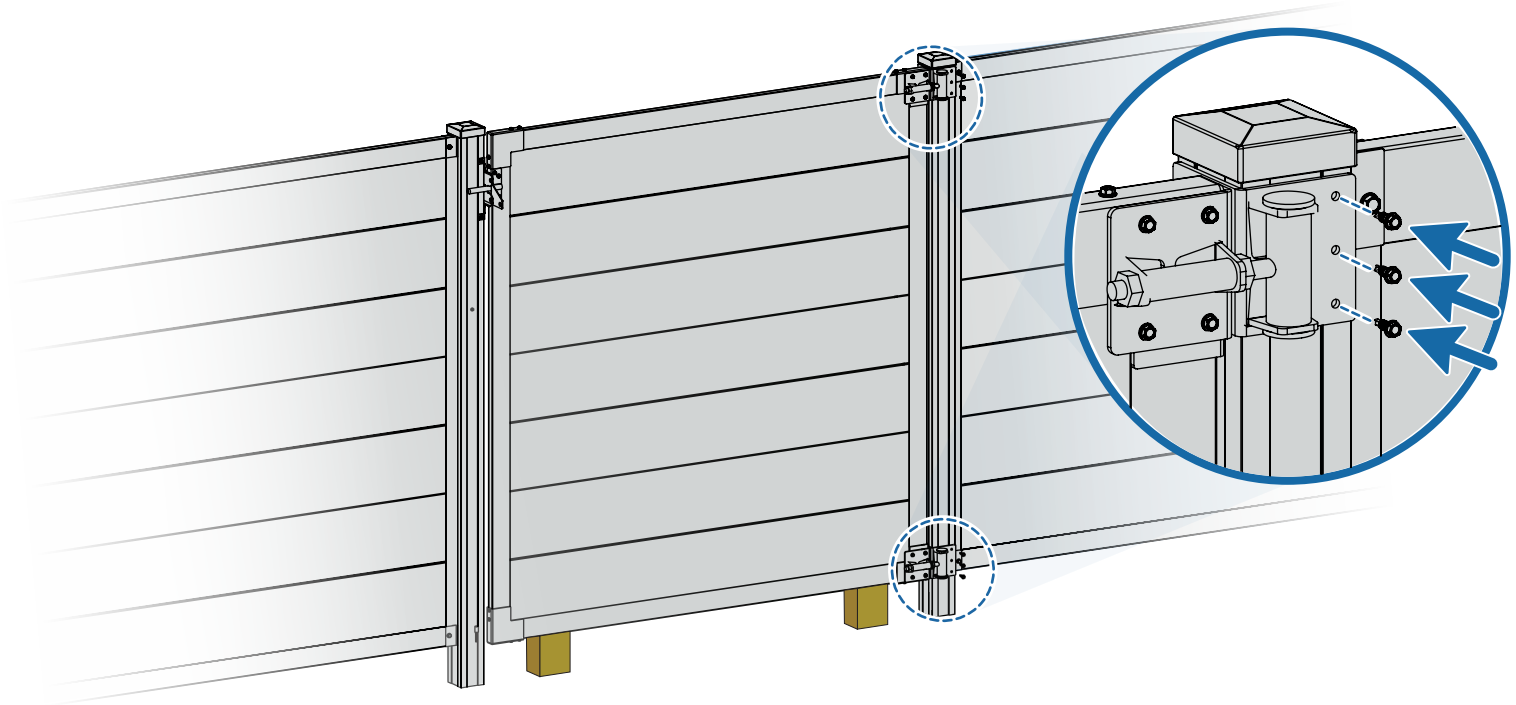

Note: Place wooden blocks under your gate to ensure it is level with your fence rails.

STEP
15 Hinge Installation

Tools Required

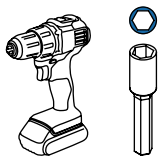

Parts:

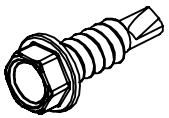

x8
(Screws included with parts I and L)

Open your gate, make sure to set your gate on the two wooden blocks, from the previous step, to keep your gate level.

Fasten hinges to the post with (8) total ⅝" black self-drilling stainless steel screws.

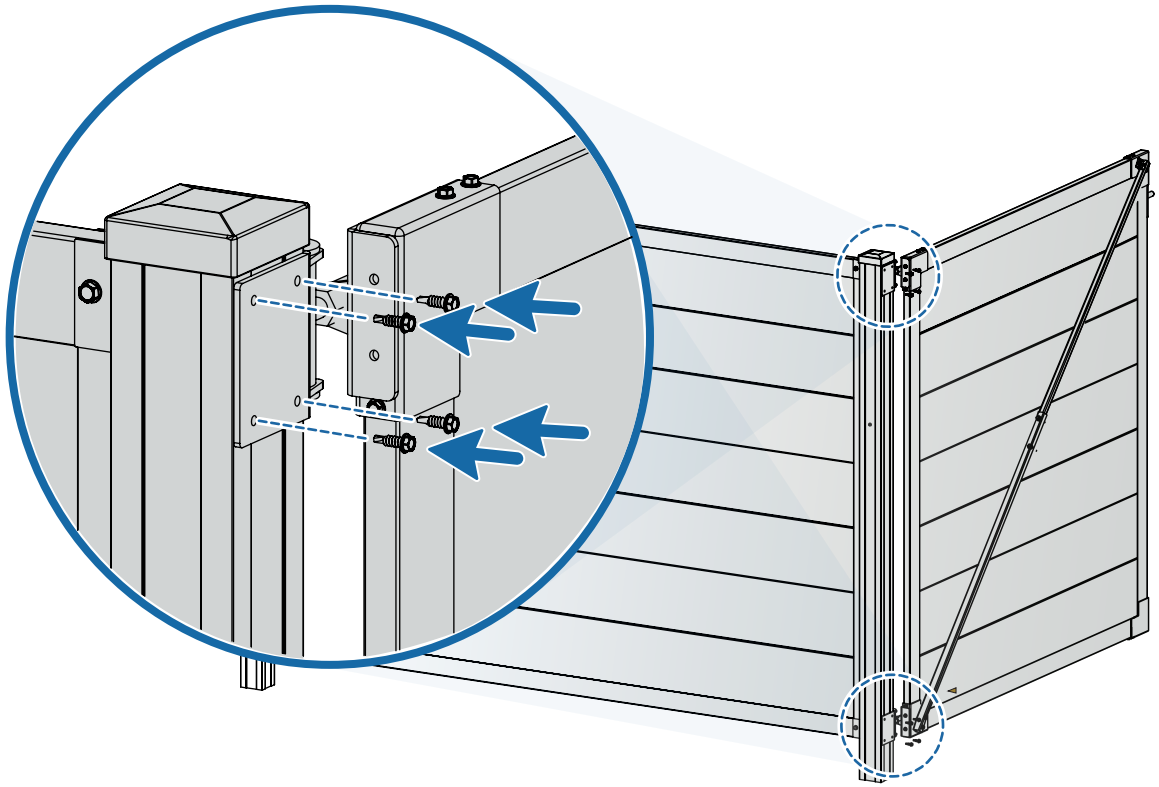

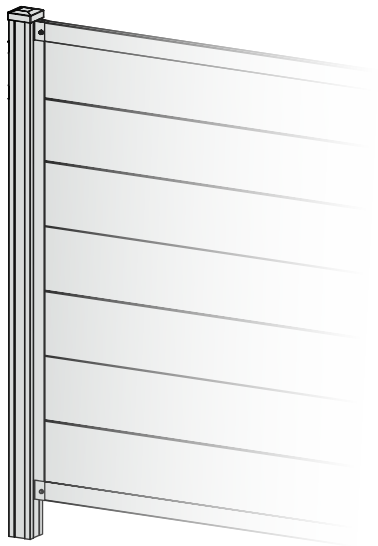

STEP
16 Hinge Installation

Fasten hinges to the inside of the gate bracket using (4) total ⅝” black self-drilling stainless steel screws.

Tools Required

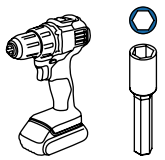

Parts:

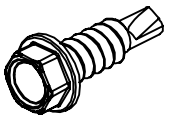

x4
(Screws included with parts I and L)

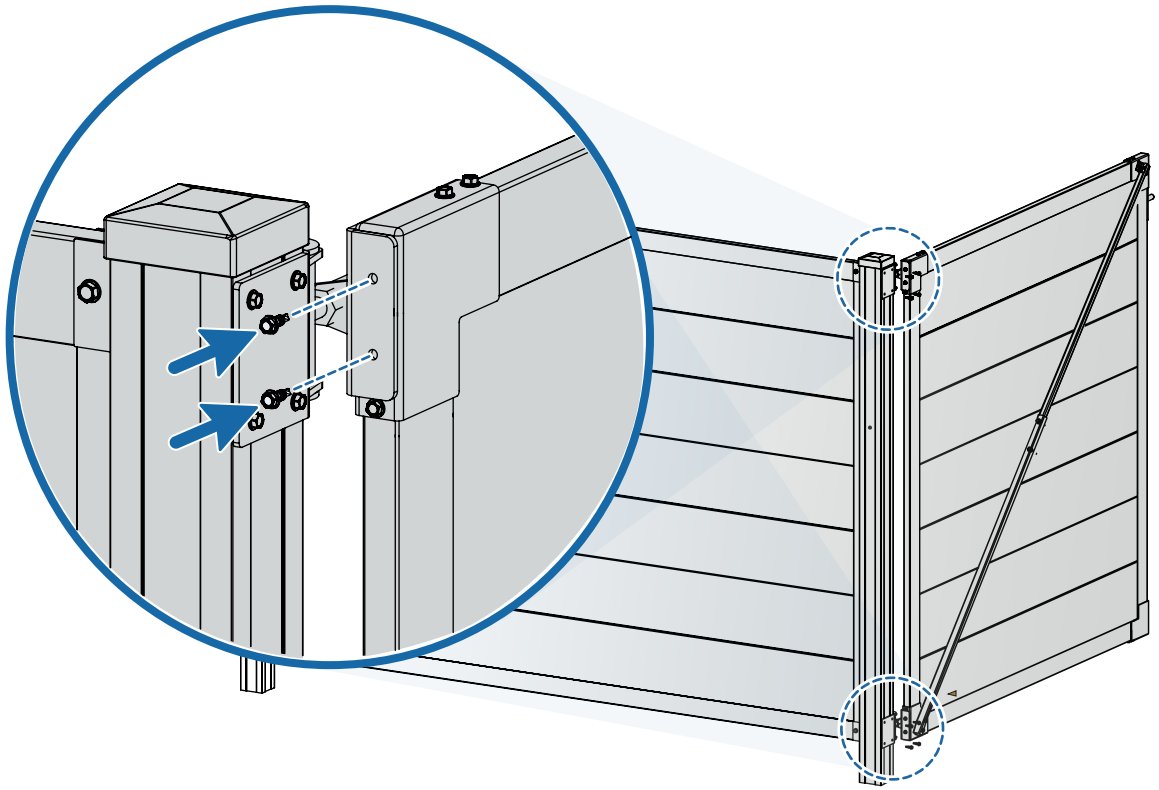

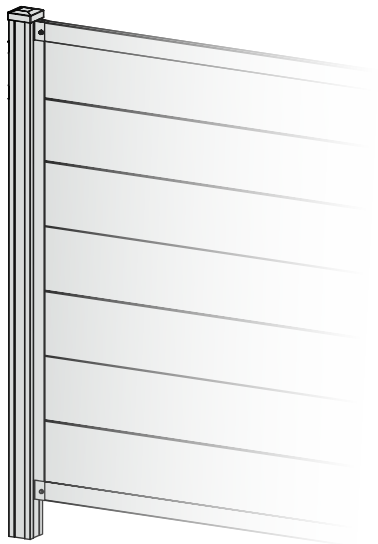

STEP

17 Leveling Your Gate

Tools Required



Level the gate to the fence post by adjusting the nuts on the hinges if needed. Check the gate to make sure it functions correctly.

Mark where you need to install your latch catch.

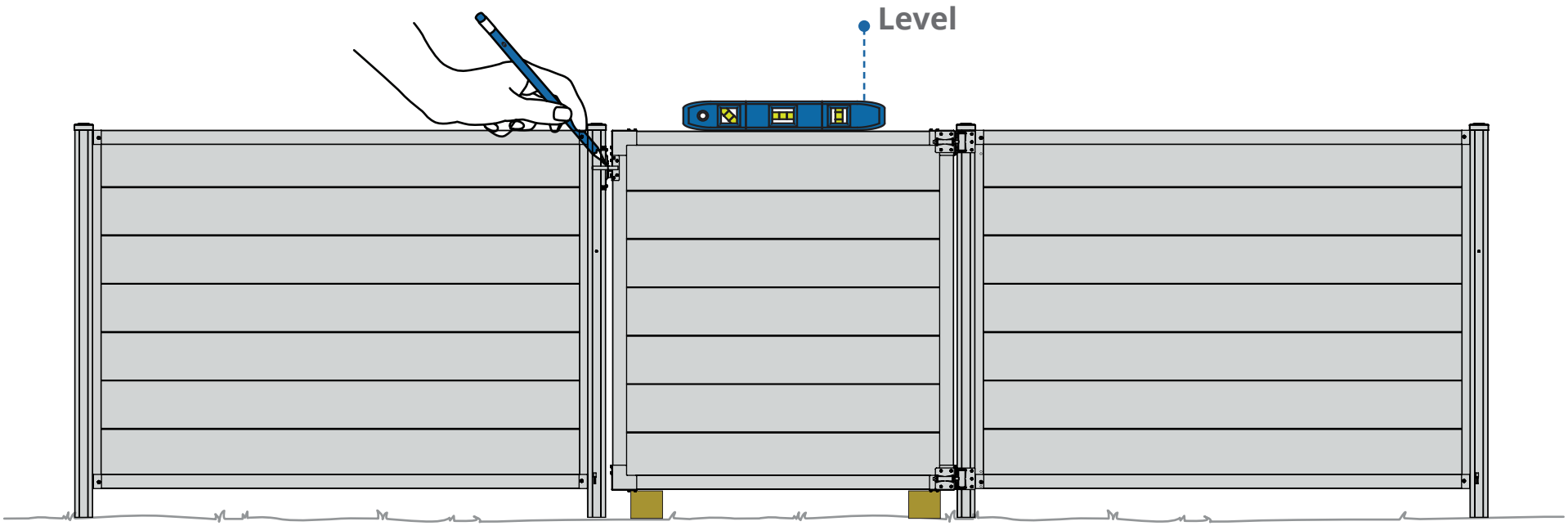

STEP

18 INSTALL LATCH CATCH

Open your gate. Align and fasten the Latch Catch **(K)** with (6) ⅝" black self-drilling stainless steel screws.

Tools Required

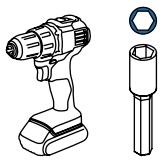

Parts:

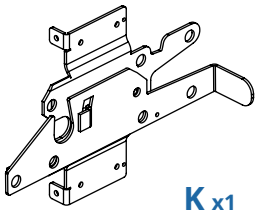

K x1

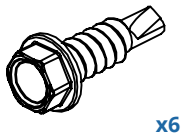

x6

(Screws included with part K)

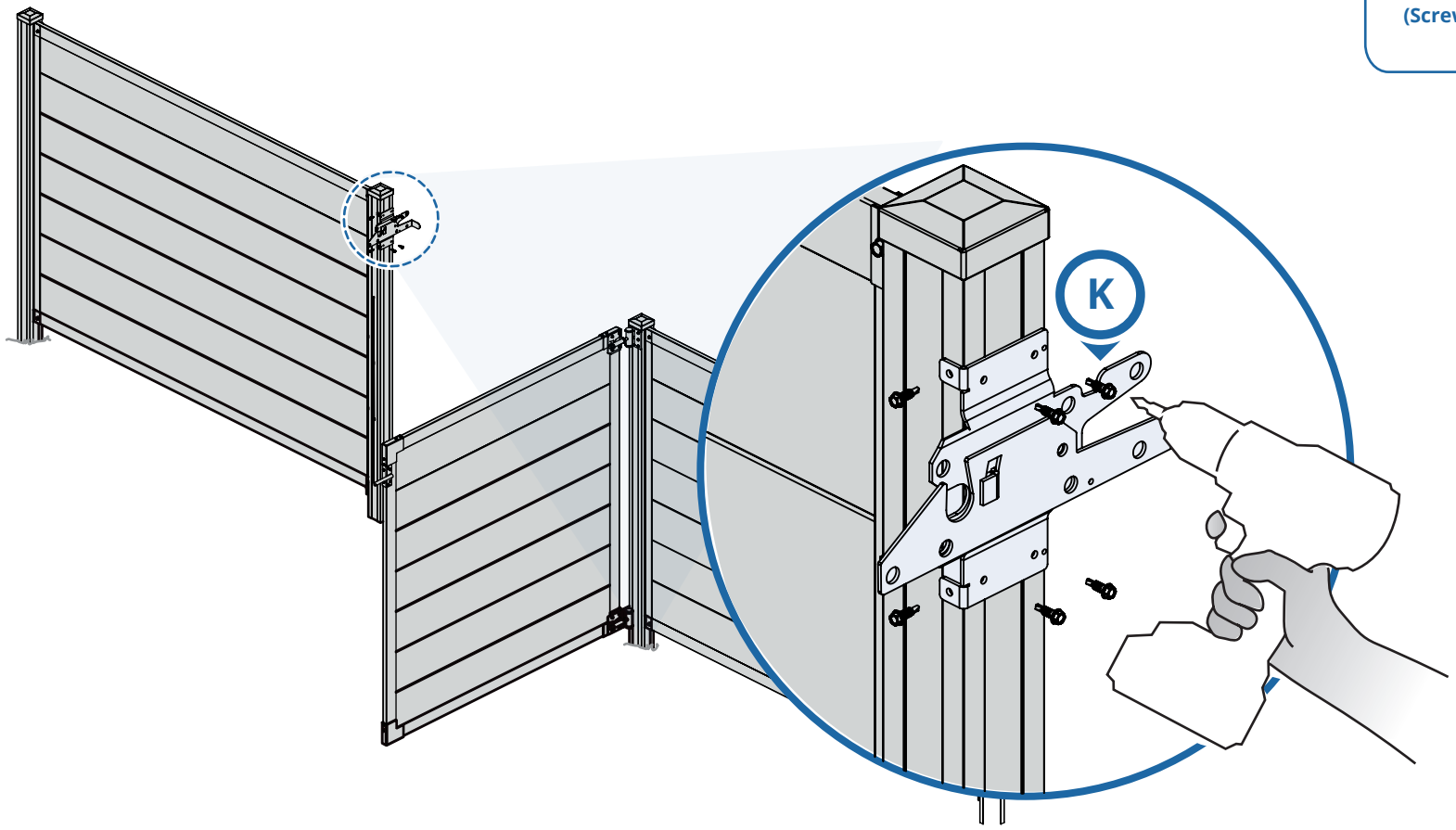

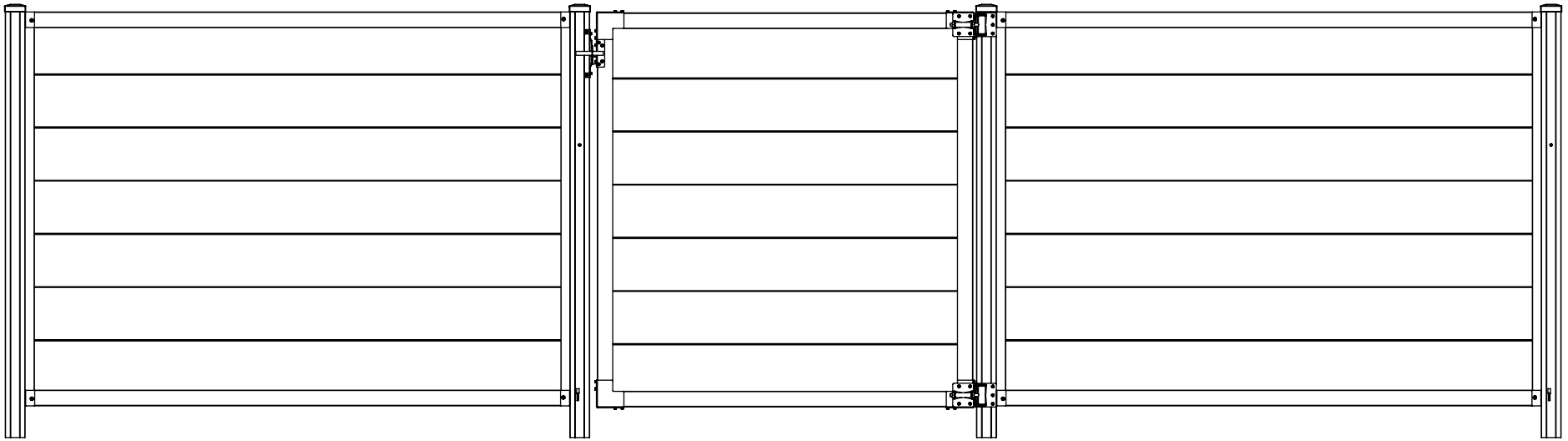

ASSEMBLY INSTRUCTIONS

BL19115-16

6935 Reames Rd. Ste. K.
Charlotte, NC 28216

hmmm@wambamfence.com

704-892-5222
877-778-5733

WWW.WAMBAMFENCE.COM

VER. 040726