Limited Warranty

Our products are warranted against defects in material and workmanship while owned by the " Original Purchaser". The term "Original Purchaser" is defined as that party or entity which purchases furniture from an authorized retailer as shown by the original sales receipt. This warranty does not apply to "as is" or previously owned seating products. We warrant its products to be free from defects in materials and workmanship(normal wear and tear, fading and stretching excepted), for one year from the date of purchase, except as provided below under the limited warranty.

The exceptions or exclusions to this warranty are as follows:

1.Any warranty claim that is submitted after the limited warranty period, or without proper proof of purchase will not include the cost of parts, labor,or delivery.

2.This warranty shall not apply to the products which have been subjected to misuse, neglect, alteration, modification, or attachments,either caused by the original purchaser, shipping,storage, accident, fire, or acts of God.

In the event of a defect in material or workmanship covered by this warranty, we will repair or replace, at their discretion, without charge the warranted furniture within a reasonable amount of time. We reserve the right to require damaged parts to be returned to us upon request, markings such as cars, brands, grain variations, wrinkles, color variations, etc. will be considered normal characteristics and not construed as defects. We cannot warrant leather against scratching or scuffing, as all leather is subject to blemishes with use.

For claims or questions concerning this warranty, please contact customer Service department.
Be prepared to provide your name, address, daytime phone number, the model and purchase order number of the product, date of purchase, and the store where it was purchased. Life fair requires that the original sales receipt be submitted with all requests to confirm that you are the original purchaser according to our written warranty.

This warranty gives you specific rights, and you may also have other rights,which vary from state to state.

NOTICE :

Please retain these instructions for future reference.

- Please read the instruction sheets completely before assembly.Remove all parts from carton and,ensure all parts are included prior to assembly.
- Assemble the sofa on a protected surface to avoid scratching the components of sofa.
- Be careful not to cross-thread screws.
- Do not use power tools.
- Two people are recommended for assembly!
- According to the fabric characteristics of sofa, please avoid direct-sun exposure.
- If the sofa is smelling, please try to air it for 24-48hours and the smell will go away. Sometimes it's because it was packed for a long time,so It's very normal to get that smell.
- certified by the environment system. So please don't worry, it won't hurt your health, it's safe to use it.

RETURN/DAMAGE CLAIM INSTRUCTIONS:

- DO NOT discard of the box/original packaging. In case a return is required, the item must be returned in original box. Without this your return will not be accepted.
- Take a photo of the box markings. A photo of the markings (text)on the side of the box or instruction is required in case a part is needed for replacement. This helps our staff identify your product number to ensure you receive the correct parts.
- Take a photo of Damage (if applicable). A photo of the damage is always required to file a claim and get your replacement or refund processed quickly.Please make sure you have the box even if it is damaged.
- Send us an email with the images requested. Email us directly from marketplace where your item was purchased with the attached images and a description of your claim.

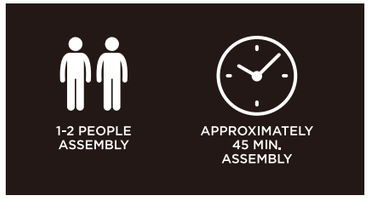

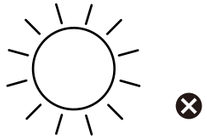

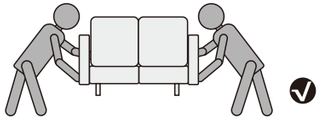

Part List Carton A : 31.1*25.2*11.8 inch

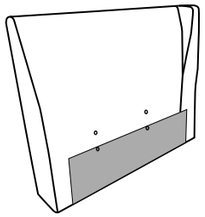

Ⓐ Facing Left Arm (*1)

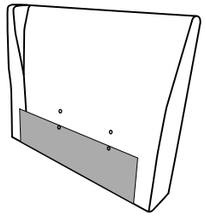

Ⓑ Facing Right Arm (*1)

❶ Screw (*8)

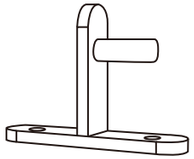

❷ Arm&Back Frame Fitting (*4)

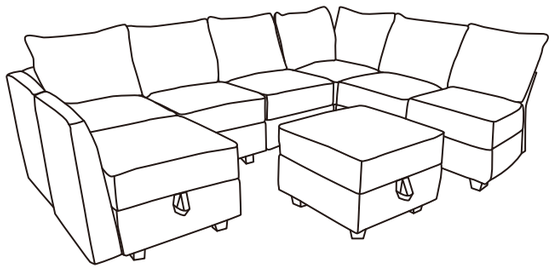

Carton A+ 7*Carton B+ Carton C

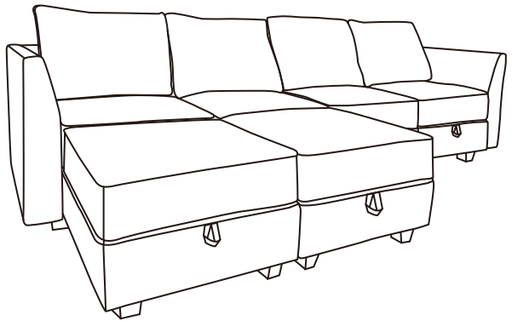

Carton A+ 4*Carton B+ 2*Carton C

Start...

Step1:

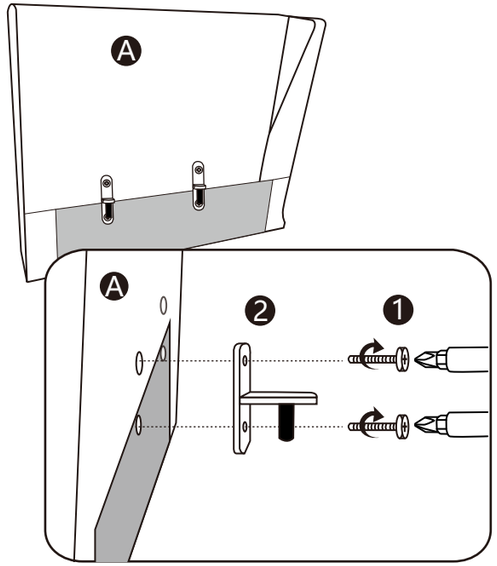

Step2:

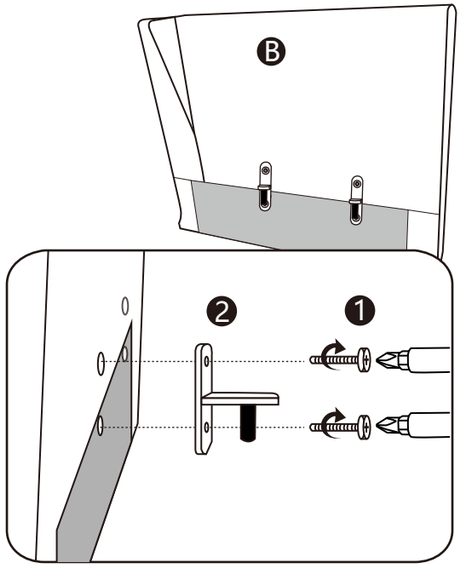

Part List Carton B : 25.6*25.6*21.3 inch

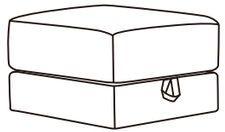

Ⓒ Single Seat (*1)

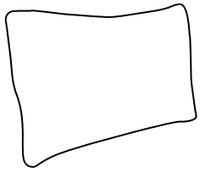

Ⓓ Back Cushion (*1)

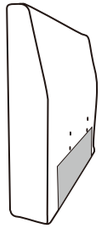

Ⓔ Back Frame (*1)

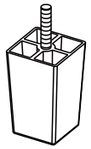

Ⓕ Plastic Leg (*4)

❶ Screw (*4)

❷ Arm&Back Frame Fitting (*2)

❸ Single Seat Fitting (*2)

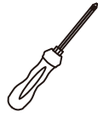

❹ Screwdriver (*1)

❺ Plastic Washer (*4)

More Combinations

About

Each single section of Sofa is independent, so it has multiple styles. It can be constantly changing with the increase of family members, and providing more flexibility. It has been added storage function in the basic modular seats, which will make your home warmer and cleaner.

just like a trans former.

You can make different combs on the basis of space and activities. It can be a chair, a chaise, or even a bed, all the sofas you want are here, open up your mind !

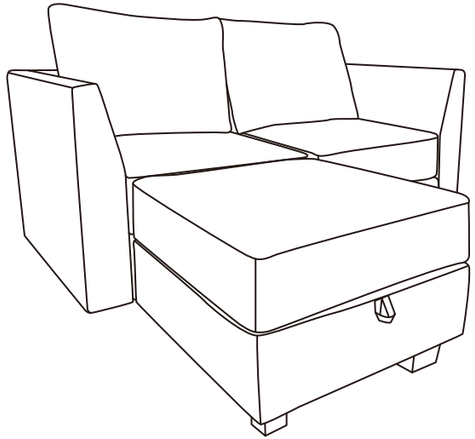

Carton A+ 2*Carton B+ Carton C

Step2:

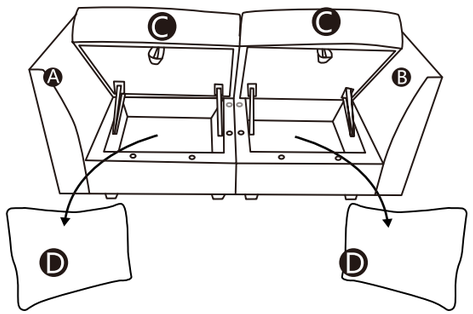

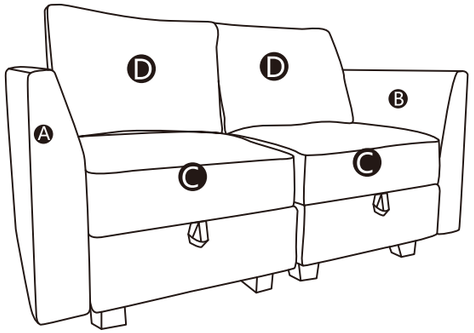

Start...

Step1:

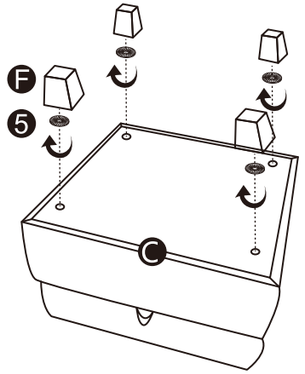

Step2:

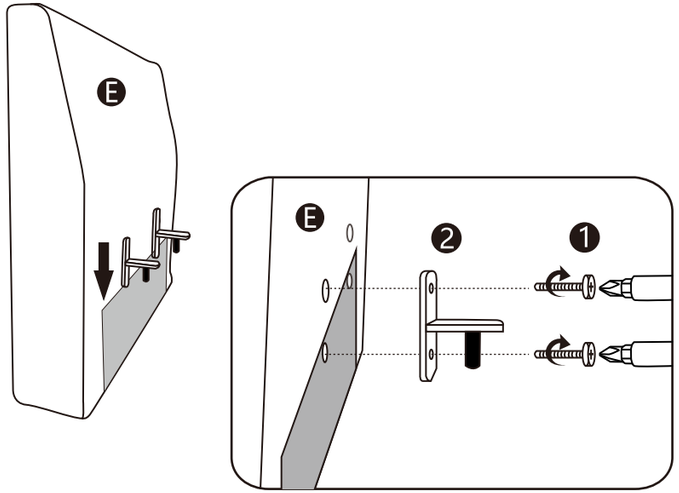

Step3:

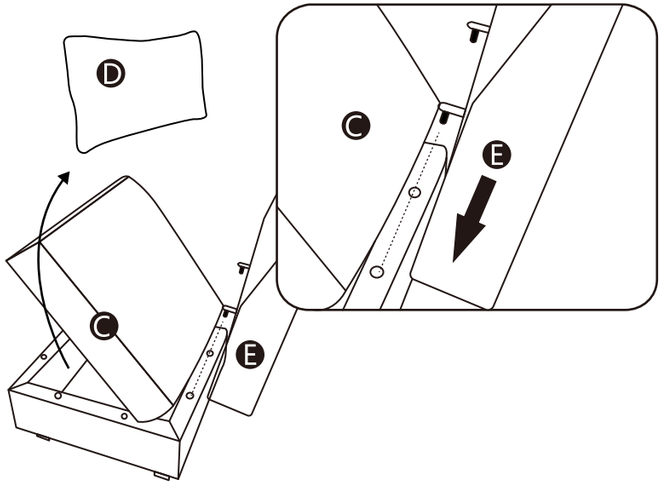

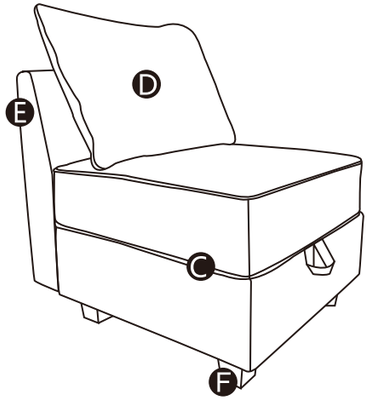

Carton A+Carton B+Carton B

Step1:

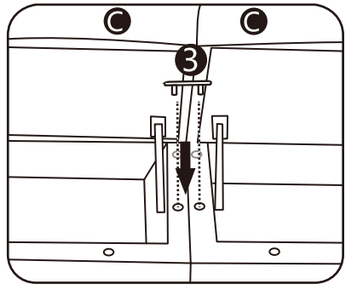

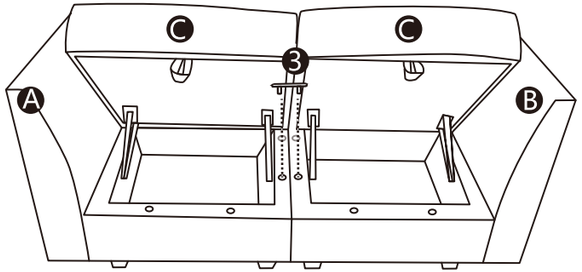

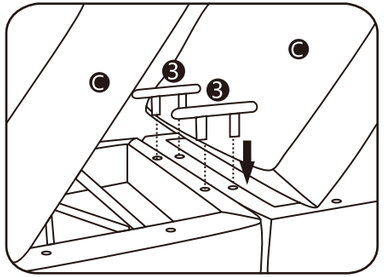

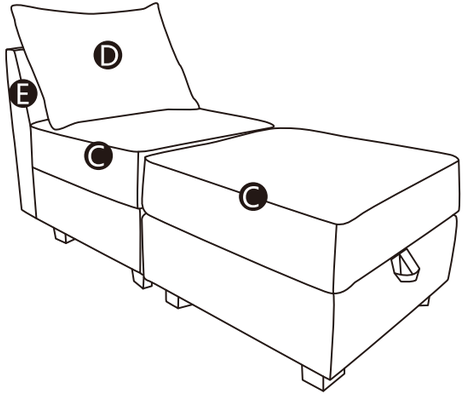

Carton B+Carton C

Step1:

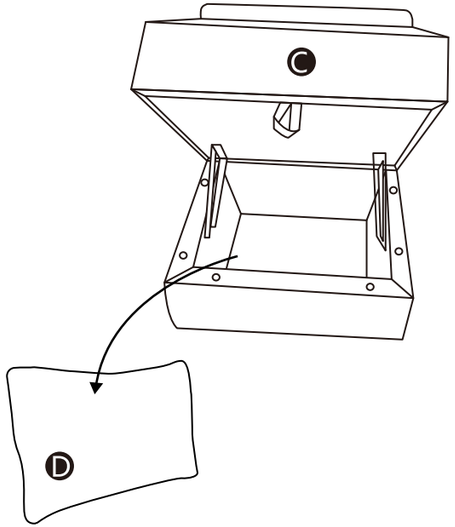

Step2:

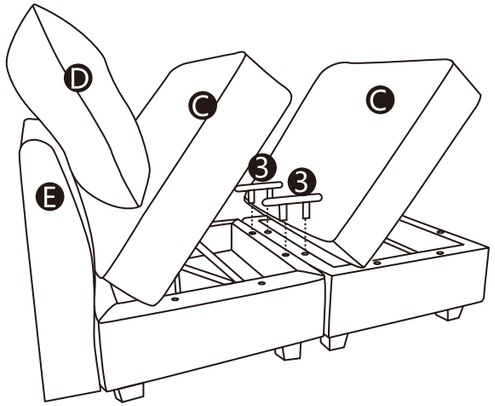

Part List Carton C : 25.6*25.6*16.5 inch

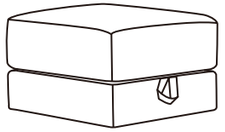

C Single Seat (*1)

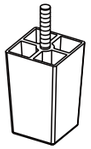

F Plastic Leg (*4)

3 Single Seat Fitting (*2)

5 Plastic Washer (*4)

Start...

Step1:

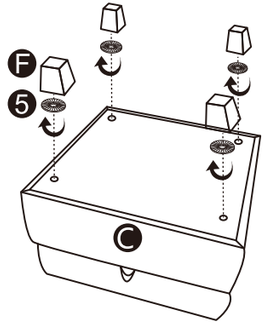

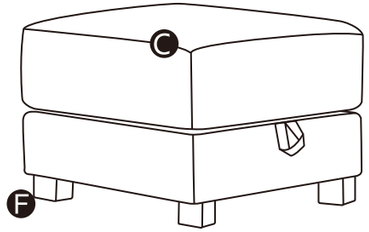

Combination Step Carton A+Carton B

Step1:

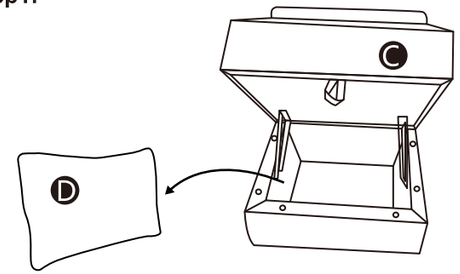

Step2:

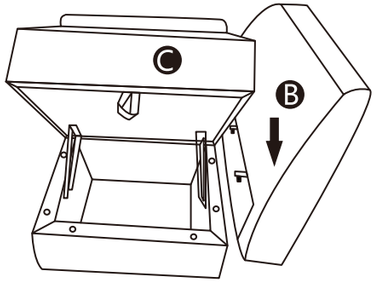
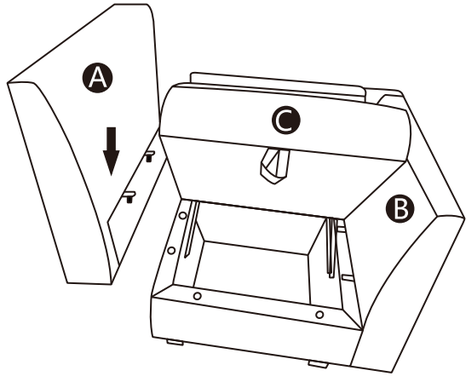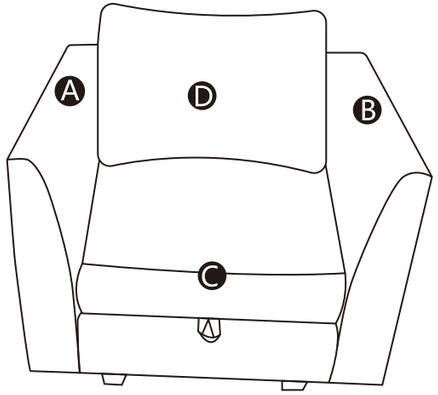
Step3: