N657P457082 N657P457083
N896P538569 N896P538570

Productmanual
Gebrauchsanweisung
Manuel du produit
Manual del producto
Manuale del prodotto

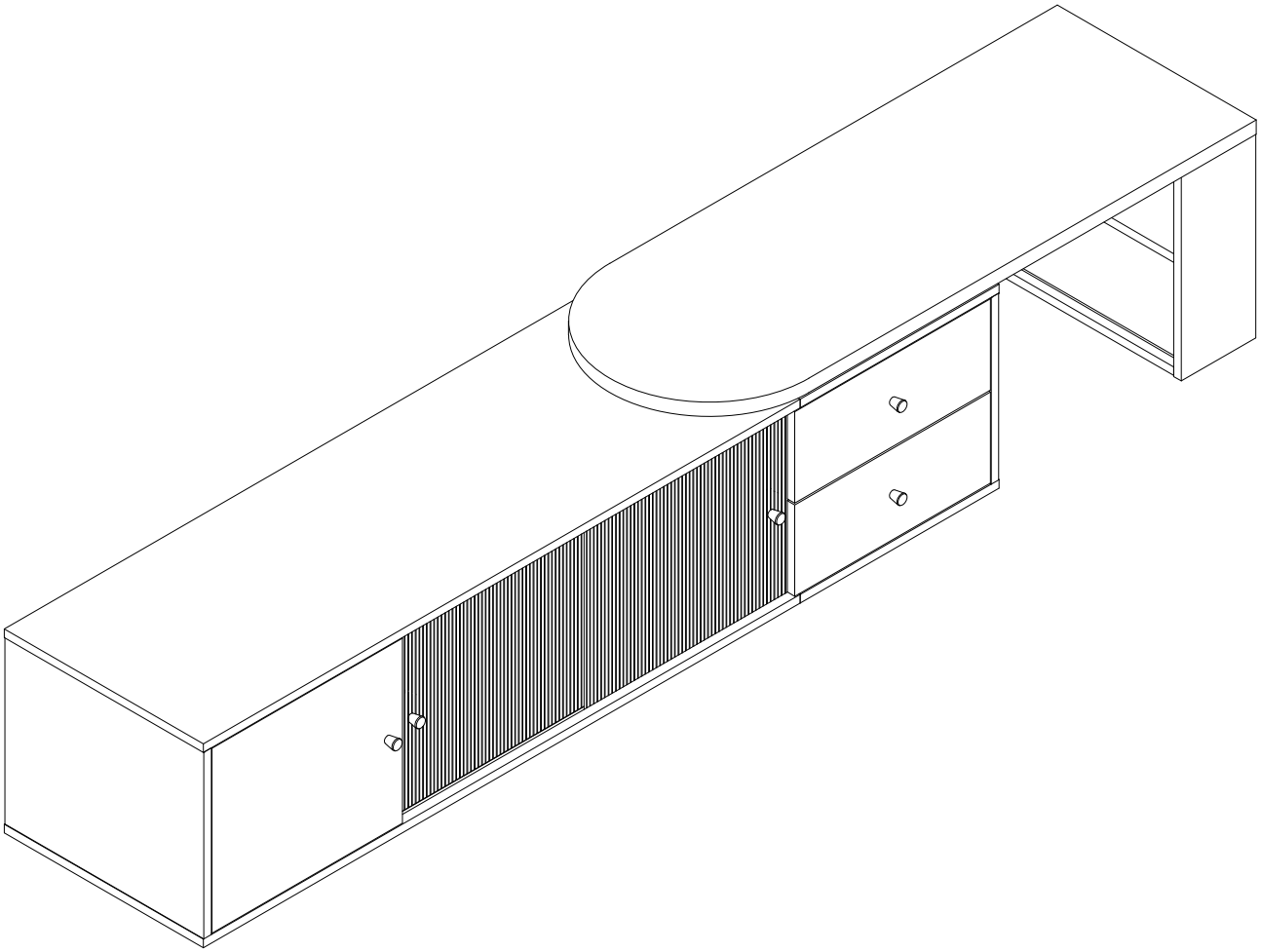

Importeur	Decobus Handel GmbH
Adresse	Innungsstraße 9, 21244 Buchholz, Deutschland
URL	https://www.decobusgroup.de
Hersteller	Qingdao Rui Kesen Home Furnishing Co.,Ltd
Adresse	Room 517, Building 32, No. 89, Changcheng Road, Chengyang, District, Qingdao City, Shandong province, China
Email/URL	Frank_hfmy@163.com
EC REP	Decobus Handel GmbH Innungsstraße 9, 2124 Buchholz, Deutschlandh ttps://www.decobusgroup.de



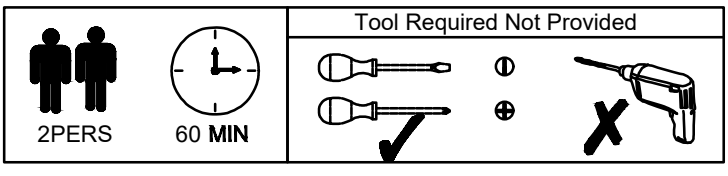



[DE]

Warnung: Lesen Sie die Anleitung vor dem Zusammenbau bitte vollständig durch. Überprüfen Sie, ob Sie alle auf den Seiten aufgeführten Komponenten und Werkzeuge haben.

Warnung: Legen Sie alle Teile auf eine ebene Fläche. Legen Sie eine weiche Decke oder Ähnliches darunter, um sie vor Kratzern oder Flecken zu schützen. Vermeiden Sie es, Komponenten über den Boden zu ziehen oder zu schieben.

Warnung: Überprüfen Sie regelmäßig alle Beschläge und Befestigungen, um sicherzustellen, dass sie sicher sind und um Unfälle zu vermeiden. Wenn Teile fehlen, kaputt, beschädigt oder abgenutzt sind, verwenden Sie das Produkt nicht weiter, bis es mit vom Hersteller autorisierten Teilen repariert wurde.

Warnung: Lassen Sie Kinder nicht auf die Möbel klettern, da dies zum Umkippen und zu schweren Verletzungen führen kann. Bauen Sie die Möbel außerhalb der Reichweite von Kindern zusammen.

Warnung: Stellen Sie die Möbel nicht in die Nähe von Feuerquellen oder heißen Gegenständen, um Brandgefahr zu vermeiden.

Warnung: Reinigen Sie die Möbel mit einem feuchten Tuch oder Alkohol. Verwenden Sie keine Reinigungsmittel mit ätzenden Chemikalien.

[EN]

Warning: Please read instructions fully before starting assembly.Check you have all the components and tools listed on pages.

Warning: Please place all parts on a flat surface.Place a soft blanket or similar underneath to protect against scratches or stains.Avoid dragging or sliding components across the floor.

Warning: Regularly check all fittings and fastenings to ensure they are secure and to prevent accidents.If any parts are missing, broken, damaged, or worn, discontinue use of the product until repairs have been made using factory authorized parts.

Warning: Do not allow children to climb on the furniture as this may result in tipping and serious personal injury.Assemble the furniture away from the reach of children.

Warning: Do not place furniture close to fire sources or high-temperature objects to avoid the risk of fire

Warning: Clean furniture with a damp cloth or alcohol, avoid using cleaning agents containing corrosive chemicals.

[FR]

Avertissement : Veuillez lire entièrement les instructions avant de commencer l'assemblage. Vérifiez que vous disposez de tous les composants et outils répertoriés sur les pages.

Avertissement : Veuillez placer toutes les pièces sur une surface plane. Placez une couverture douce ou similaire en dessous pour les protéger des rayures ou des taches. Évitez de faire glisser les composants sur le sol.

Avertissement : Vérifiez régulièrement tous les raccords et fixations pour vous assurer qu'ils sont bien fixés et pour éviter les accidents. Si des pièces manquent, sont cassées, endommagées ou usées, cessez d'utiliser le produit jusqu'à ce que des réparations aient été effectuées à l'aide de pièces autorisées par l'usine.

Avertissement : Ne laissez pas les enfants grimper sur les meubles car cela pourrait entraîner un basculement et des blessures graves. Assemblez les meubles hors de portée des enfants.

Avertissement : Ne placez pas les meubles à proximité de sources de feu ou d'objets à haute température pour éviter tout risque d'incendie.

Avertissement : Nettoyez les meubles avec un chiffon humide ou de l'alcool, évitez d'utiliser des produits de nettoyage contenant des produits chimiques corrosifs.

[IT]

Attenzione: leggere attentamente le istruzioni prima di iniziare il montaggio. Verificare di avere tutti i componenti e gli strumenti elencati nelle pagine.

Attenzione: posizionare tutte le parti su una superficie piana. Posizionare una coperta morbida o simile sotto per proteggere da graffi o macchie. Evitare di trascinare o far scivolare i componenti sul pavimento.

Attenzione: controllare regolarmente tutti i raccordi e i dispositivi di fissaggio per assicurarsi che siano sicuri e per prevenire incidenti. Se alcune parti sono mancanti, rotte, danneggiate o usurate, interrompere l'uso del prodotto fino a quando non siano state eseguite le riparazioni utilizzando parti autorizzate dalla fabbrica.

Attenzione: non consentire ai bambini di arrampicarsi sui mobili poiché ciò potrebbe causare ribaltamenti e gravi lesioni personali. Montare i mobili lontano dalla portata dei bambini.

Attenzione: non posizionare i mobili vicino a fonti di fuoco o oggetti ad alta temperatura per evitare il rischio di incendio

Attenzione: pulire i mobili con un panno umido o alcol, evitare di utilizzare detergenti contenenti sostanze chimiche corrosive.

[ES]

Advertencia: Lea las instrucciones completamente antes de comenzar el montaje. Compruebe que tiene todos los componentes y herramientas que se enumeran en las páginas.

Advertencia: Coloque todas las piezas sobre una superficie plana. Coloque una manta suave o algo similar debajo para protegerlas de rayones o manchas. Evite arrastrar o deslizar los componentes por el piso.

Advertencia: Verifique regularmente todos los accesorios y fijaciones para asegurarse de que estén seguros y evitar accidentes. Si falta alguna pieza, está rota, dañada o desgastada, deje de usar el producto hasta que se hayan realizado las reparaciones con piezas autorizadas de fábrica.

Advertencia: No permita que los niños se suban a los muebles, ya que esto puede provocar que se vuelquen y lesiones personales graves. Monte los muebles fuera del alcance de los niños.

Advertencia: No coloque los muebles cerca de fuentes de fuego u objetos de alta temperatura para evitar el riesgo de incendio.

Advertencia: Limpie los muebles con un paño húmedo o alcohol, evite usar agentes de limpieza que contengan químicos corrosivos.

Importeur	Decobus Handel GmbH
Adresse	Innungsstraße 9, 21244 Buchholz, Deutschland
Email/URL	https://www.decobusgroup.de
Hersteller	Qingdao Rui Kesen Home Furnishing Co.,Ltd
Adresse	Room 517, Building 32, No. 89, Changcheng Road, Chengyang District, Qingdao City, Shandong province, China
Email/URL	Frank_hfmy@163.com

EC REP

Decobus Handel GmbH
Innungsstraße 9, 21244 Buchholz, Deutschland
https://www.decobusgroup.de

Importer	COMHARBOR LIMITED
Add	Unit C,Swift Point,Cosford Lane,Rugby,CV21 1PY,GB
Email/URL	harborcomhar@gmail.com
Manufacturer	Qingdao Rui Kesen Home Furnishing Co.,Ltd
Add	Room 517, Building 32, No. 89, Changcheng Road, Chengyang District, Qingdao City, Shandong province, China
Email/URL	frank_hfmy@163.com

UK REP

COMHARBOR LIMITED
UnitC,Swift Point,Cosford Lane,Rugby,CV211PY,GB
harborcomhar@gmail.com

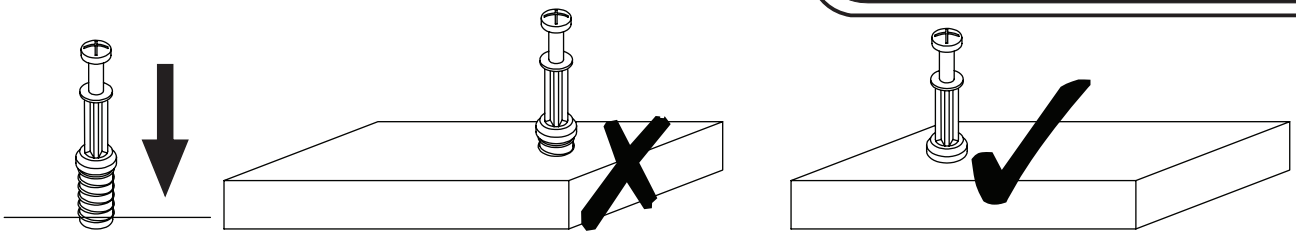

EN_QUICKFIT: Tighten quickfit until shoulder is flush with panel.Do not overtighten or undertighten.
FR_RACCORD RAPIDE:Faites serrer le raccord rapide jusqu'à ce que l'épaulement soit parfaitement encastré dans le panneau. Il ne faut ni trop serrer ni insuffisamment serrer.
ES_QUICKFIT:Apriete quickfit hasta que el hombre se descargue con el panel. NO lo sobreapriete ni lo apriete poco.
DE_QUICKFIT:Ziehen Sie den Quickfit fest, bis die Schulter mit der Platte bündig ist. Bitte nicht zu fest oder zu schwach anziehen.
IT_MONTAGGIO RAPIDO:Stringere il montaggio rapido fino a quando la spalla è a filo con il pannello, non stringere troppo o troppo poco.

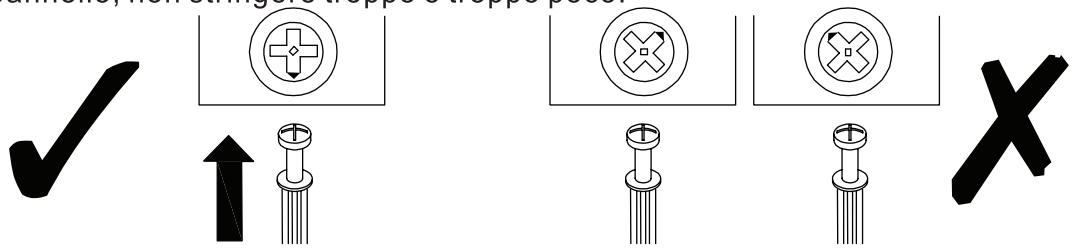

EN_CAM LOCK: When fitting cam lock, ensure starting position is correct before you insert connecting quickfit.
FR_SERRURE BATTEUSE:Avant d'insérer la serrure batteuse, veillez à la bonne orientation avant d'insérer le raccord rapide.
ES_CIERRE DE LA CÁMARA:Cuando instale el cierre de la cámara, asegúrese de que la posición de inicio es correcta antes de que inserte el quickfit conector.
DE_CAM-LOCK:Achten Sie bei der Montage des Cam-Locks auf die richtige Ausgangsposition, bevor Sie den Quickfit einsetzen.
IT_BLOCCAGGIO A CAMMA:Quando si monta il bloccaggio a camma, assicurarsi che la posizione iniziale sia corretta prima di inserire il montaggio rapido di collegamento.

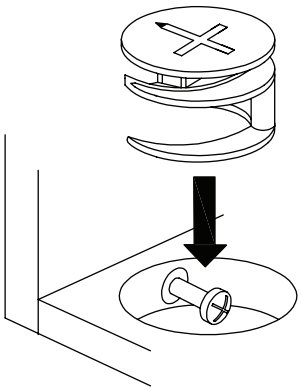

EN_ Quickfit head should be in the centre of the cam lock when the two panels are joined.
Cam lock should be inserted before quickfit.
FR_ Lorsque les deux panneaux sont assemblés, la tête du raccord rapide doit reposer au centre de la serrure batteuse.
Il faut insérer la serrure batteuse avant le raccord rapide.
ES_ El cabezal del quickfit debe estar en el centro del cierre de la cámara cuando se unan los dos paneles.
Se debe insertar el cierre de la cámara antes que el quickfit.
DE_ Der Quickfit-Kopf sollte sich in der Mitte des Cam-Locks befinden, wenn die beiden Platten zusammengefügt sind.
Der Cam-Lock sollte vor dem Quickfit eingesetzt werden.
IT_ La testa del montaggio rapido deve trovarsi al centro del bloccaggio a camma quando i due pannelli sono uniti.
Il Bloccaggio a Camma deve essere inserito prima del montaggio rapido.

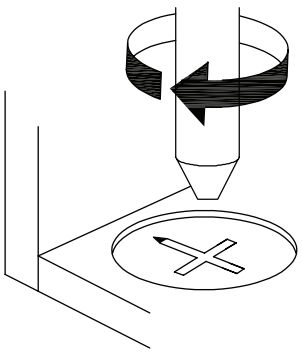

EN_ Turn cam lock clockwise to tighten.
FR_ Faites tourner la serrure batteuse dans le sens des aiguilles d'une montre pour la resserrer.
ES_ Gire el cierre de la cámara en sentido horario para apretarlo.
DE_ Drehen Sie den Cam-Lock im Uhrzeigersinn, um ihn festzuziehen.
IT_ Ruotare il bloccaggio a camma in senso orario per stringere.

EN_ It may be necessary to adjust the hinges so that the doors align.Use the instructions below as a guide.
FR_ Il est parfois nécessaire d'ajuster les charnières pour un meilleur alignement des portes. Servez-vous des instructions ci-dessous comme guide.
ES_ Puede que sea necesario ajustar los quicios de forma que se alineen las puertas. Use las instrucciones que aparecen debajo como guía.
DE_Möglicherweise müssen Sie die Scharniere so einstellen, dass die Türen ausgerichtet sind. Verwenden Sie die nachstehenden Anweisungen als Leitfaden.
IT_ Potrebbe essere necessario regolare le cerniere in modo che le porte siano allineate. Per fare ciò attenersi alle istruzioni sottostanti.

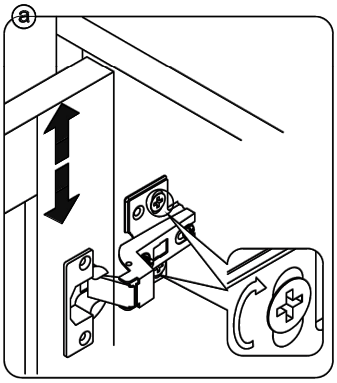

EN_ To adjust the door vertically loosen the screw asshown and move up and down as needed.
FR_ Si vous souhaitez régler la porte **verticalement**, desserrez la vis comme indiqué et déplacez la porte de haut en bas selon les besoins.
ES_ Para ajustar la puerta **verticalmente** afloje el tornillo tal y como se muestra y muévalo hacia arriba o hacia abajo según sea necesario.
DE_ Um die Tür **vertikal** auszurichten, lösen Sie die Schraube wie abgebildet und bewegen Sie sie nach Bedarf nach oben oder nach unten.
IT_ Per allineare la porta **verticalmente** allentare la vite come mostrato e spostarla in alto o in basso secondo necessità.

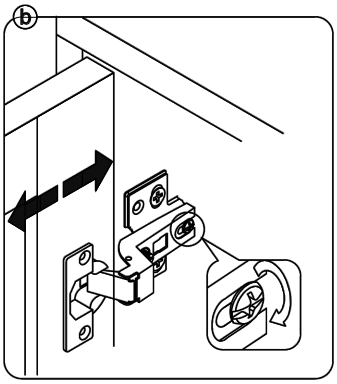

EN_ To adjust the gap from the door to the main frame turn the screw clockwise or anti-clockwise as needed.
FR_ Si vous souhaitez ajuster **l'écart** entre la porte et le cadre principal, tournez la vis dans le sens des aiguilles d'une montre ou dans le sens inverse, si nécessaire.
ES_ Para ajustar el **espacio** desde la puerta al marco principal, gire el tornillo en sentido horario o antihorario, según se necesite.
DE_ Um den **Abstand** von der Tür zum Hauptrahmen auszurichten, drehen Sie die Schraube je nach Bedarf im oder gegen den Uhrzeigersinn.
IT_ Per regolare lo **spazio** tra la porta e il telaio principale, avvitare o svitare la vite secondo necessità.

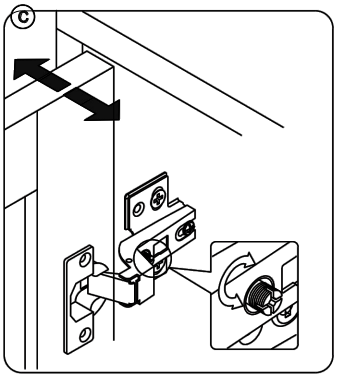

EN_ To adjust the door laterally adjust the screw as shown by turning clockwise or anti-clockwise.
FR_ Si vous souhaitez ajuster la porte **latéralement**, ajustez la vis comme indiqué en tournant dans le sens des aiguilles d'une montre ou dans le sens inverse des aiguilles d'une montre.
ES_ Para ajustar la puerta **lateralmente** ajuste el tornillo tal y como se muestra girándolo en sentido horario y antihorario.
DE_ Um die Tür **seitlich** auszurichten, stellen Sie bitte die Schraube wie abgebildet durch Drehen im oder gegen den Uhrzeigersinn ein.
IT_ Per allineare la porta **lateralmente** regolare la vite come mostrato, avvitandola o svitandola.

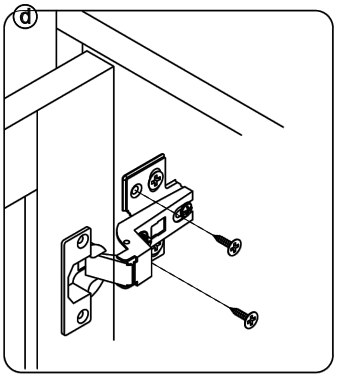

EN_ Please fix other screws
FR_ Merci de serrer les autres vis.
ES_ Fije los demás tornillos
DE_ Befestigen Sie bitte die anderen Schrauben
IT_ Fissare le altre viti



DE

Warnung: Die maximale Belastbarkeit dieses Möbels beträgt:60kg, bitte nicht überlasten!

EN

Warning: The maximum load-bearing capacity of this furniture is:60kg, please do not overload!

FR

Avertissement : La capacité de charge maximale de ce meuble est de :60kg, merci de ne pas surcharger !

IT

Attenzione: la capacità di carico massima di questo mobile è:60kg, non sovraccaricare!

ES

Advertencia: La capacidad máxima de carga de este mueble es:60kg, ¡no lo sobrecargue!

Parts List

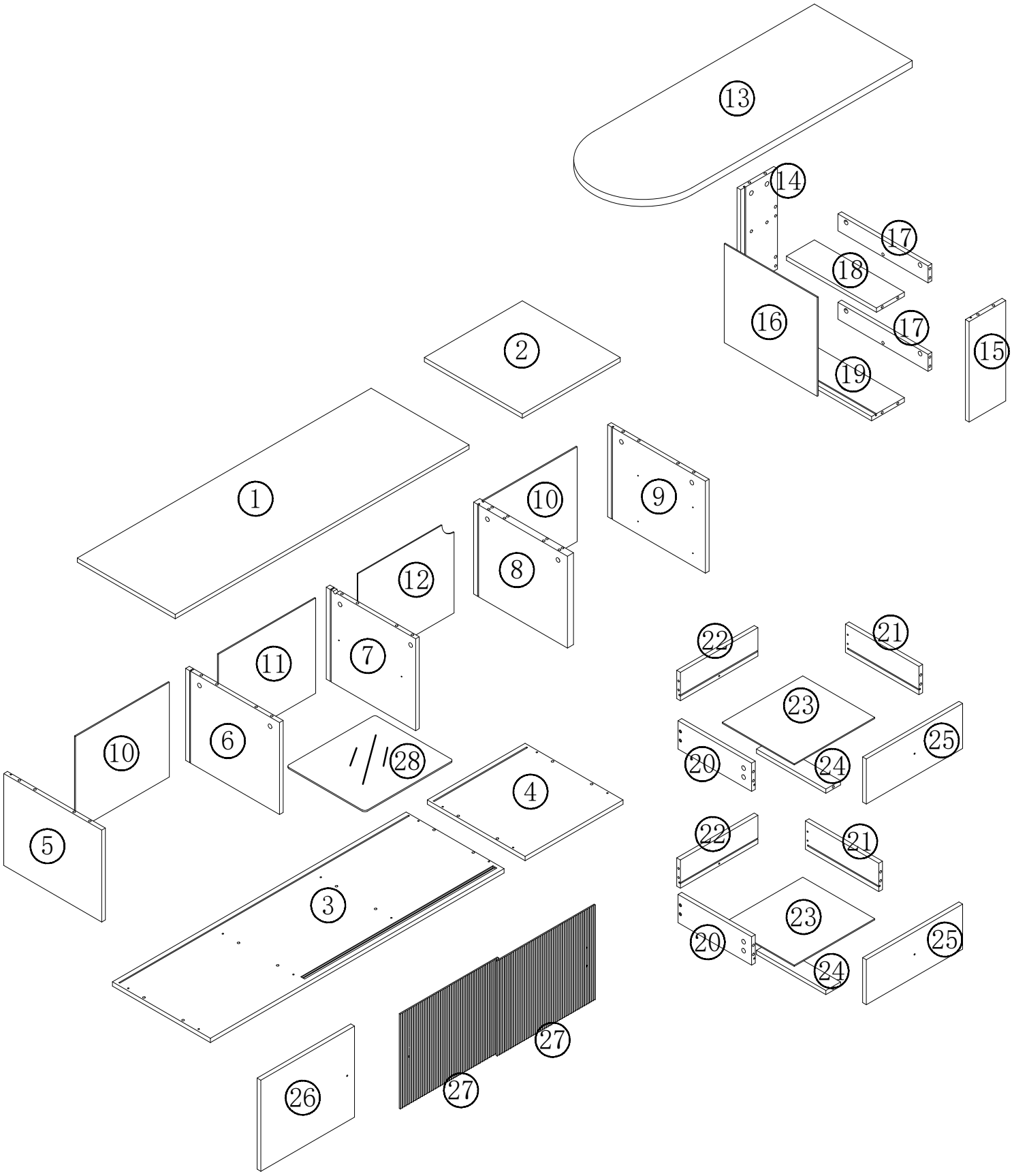
13
14
17
18
16
17
15
19
2
1
10
9
8
12
7
11
6
10
28
5
4
3
22
21
23
25
20
24
22
21
23
25
20
24
27
27
26

N657P457082/N896P538569

②	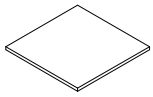	1
④	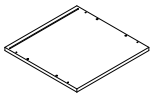	1
⑤	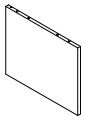	1
⑥	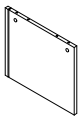	1
⑦	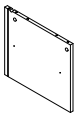	1
⑧	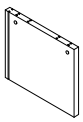	1
⑨	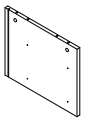	1
⑭		1
⑮		1

⑳		2
㉑		2
㉒		2
㉓	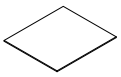	2
㉔		2
㉕		2
㉖	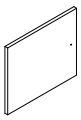	1
㉗		2
	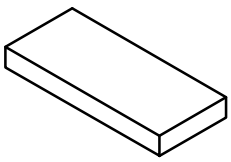 Hardware kit	

N657P457083/N896P538570

①	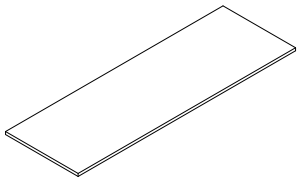	1
③	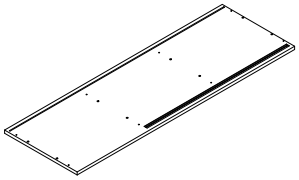	1
⑩	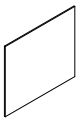	2
⑪	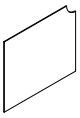	1
⑫	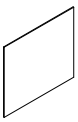	1
⑬	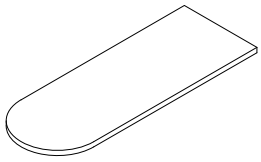	1
⑯	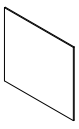	1
⑰		2
⑱		1

⑲	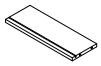	1
㉘	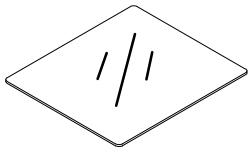	1

Hardware

N657P457082/N896P538569

A 40mm  x40	B Ø15*9  x40	C Ø8*30  x28	D Ø3.5*14  x52	E Ø5*40 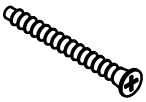 x12
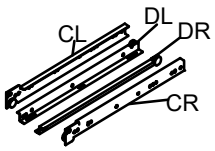 x2	F  x5	H  x20	I Ø4*10  x2	J Ø4*20 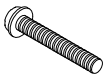 x3
K  x1	L  x4	M 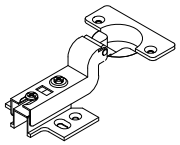 x2	N 4*30  x10	P 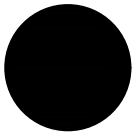 x40
U  x1				

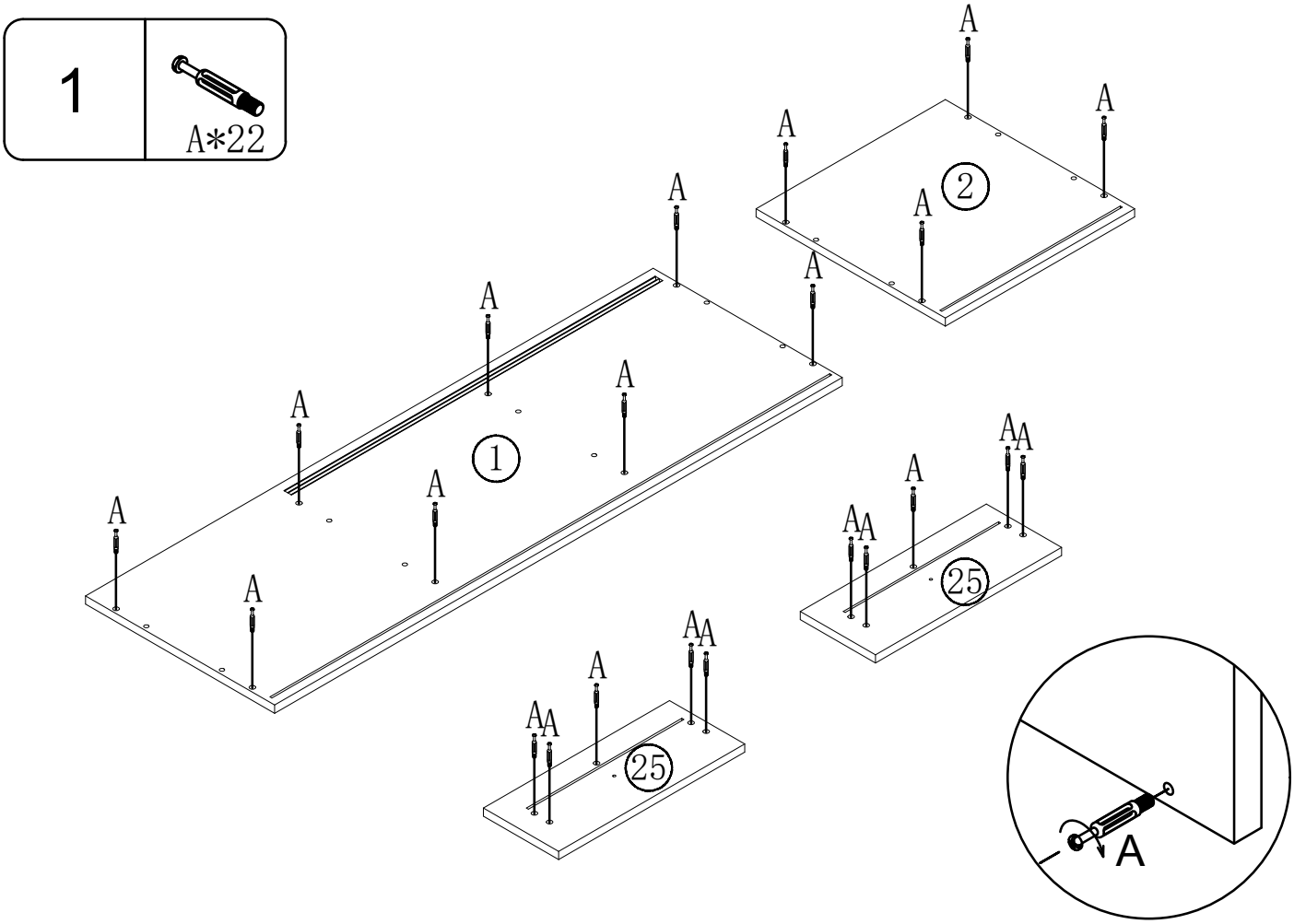
1
A*22
A
2
1
25
25
A

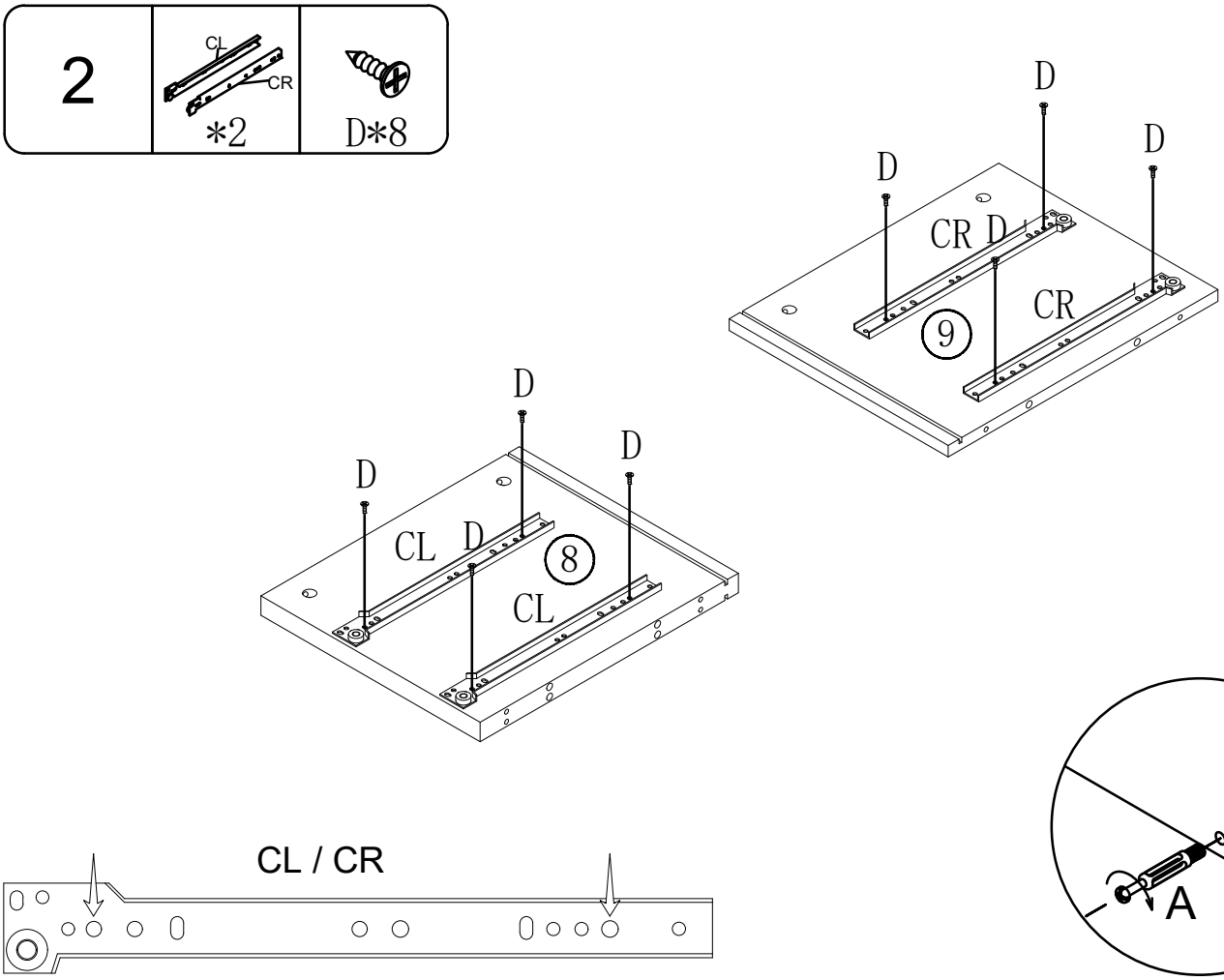
2
CL
CR
*2
D*8
D
CR D
CR
9
D
CL D
CL
8
CL / CR
A

3	A*18

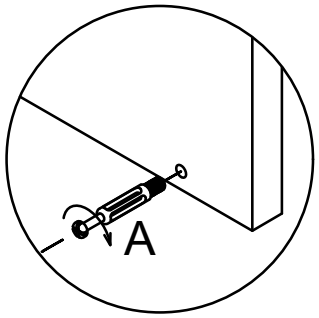

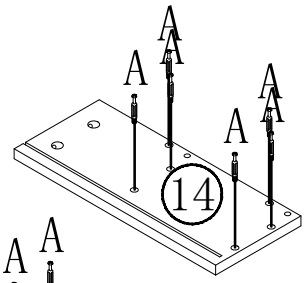

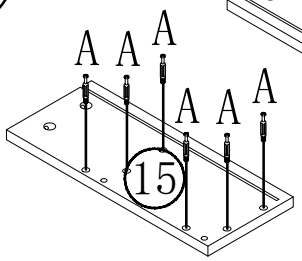

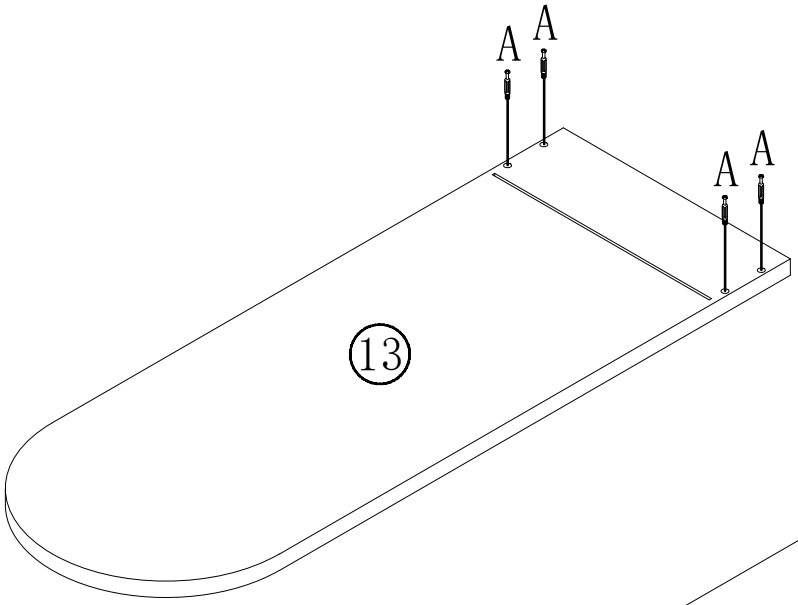

X2

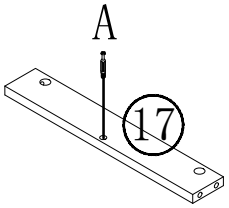

4	E*12	C*12

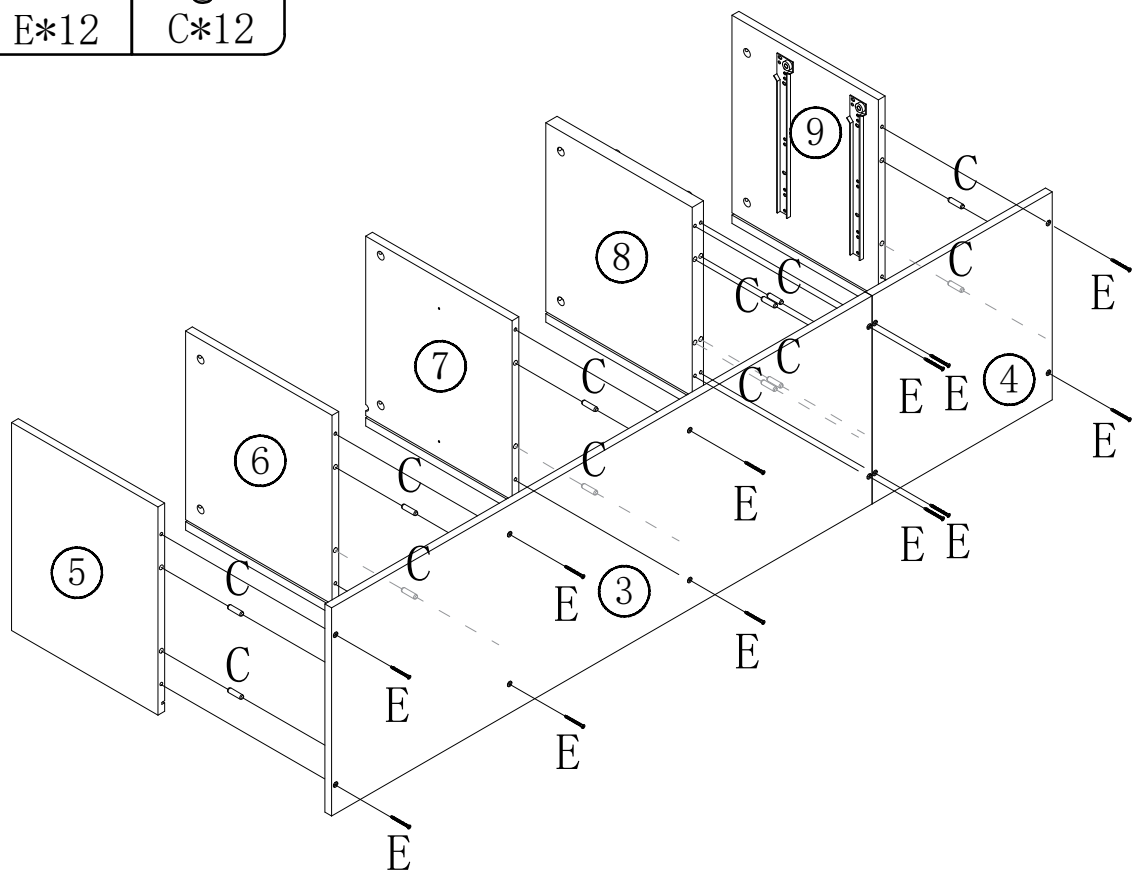

5	D*4	L*4

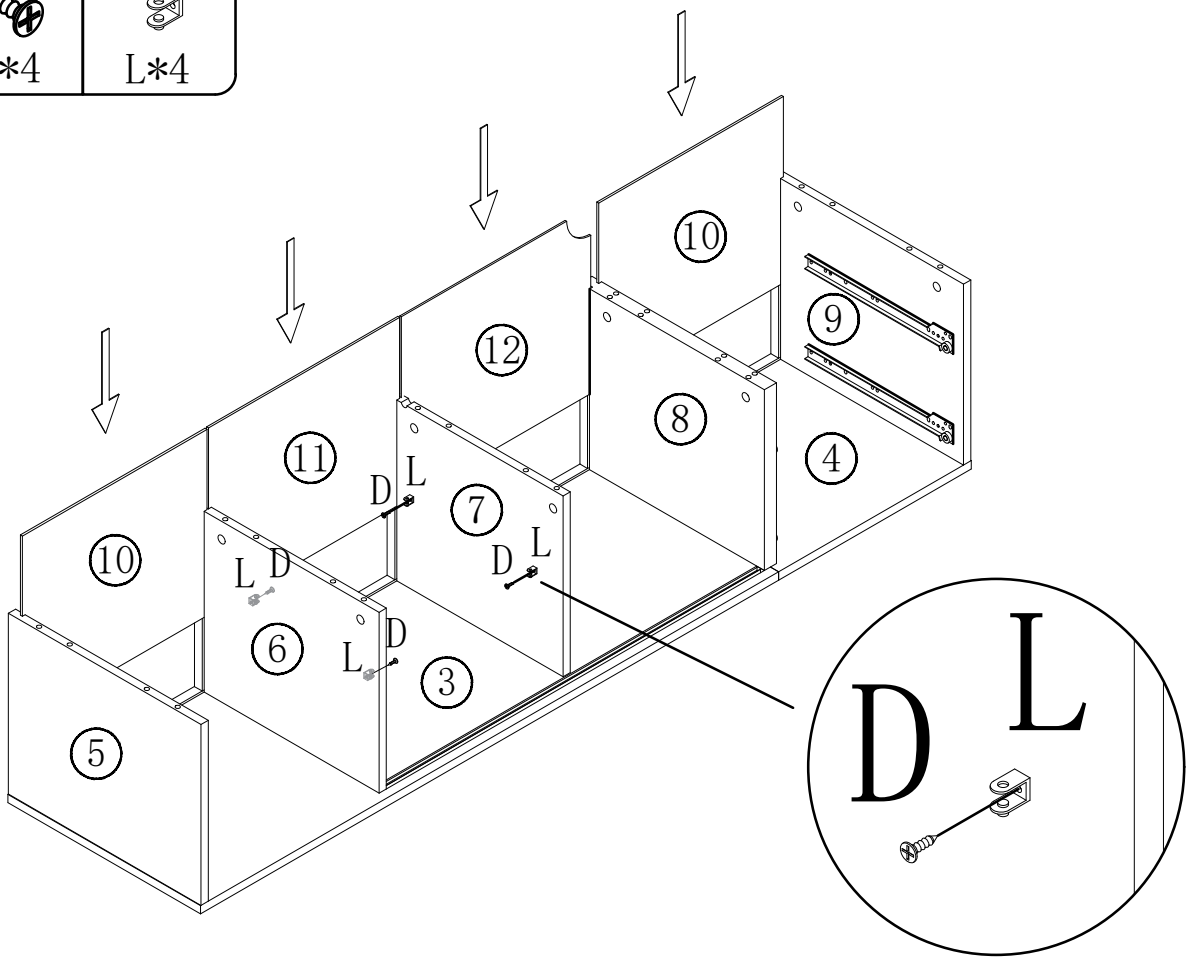

6

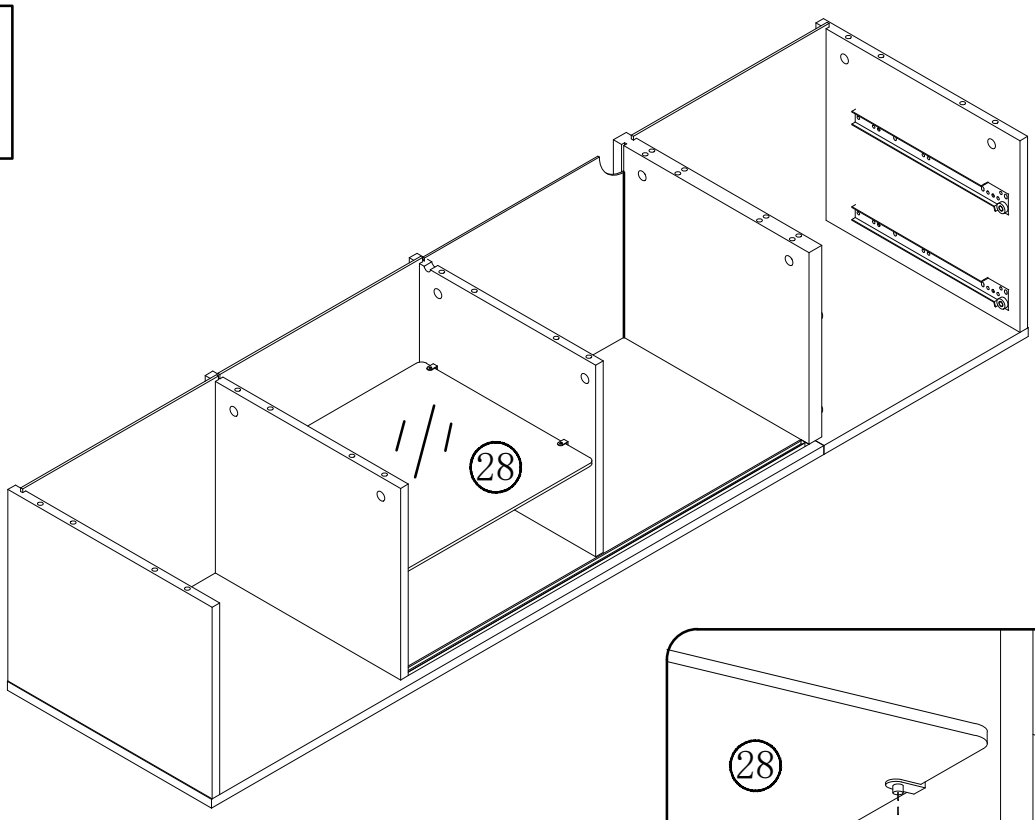

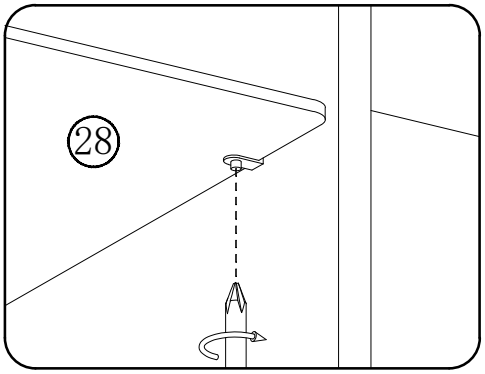

7	I*2	F*2

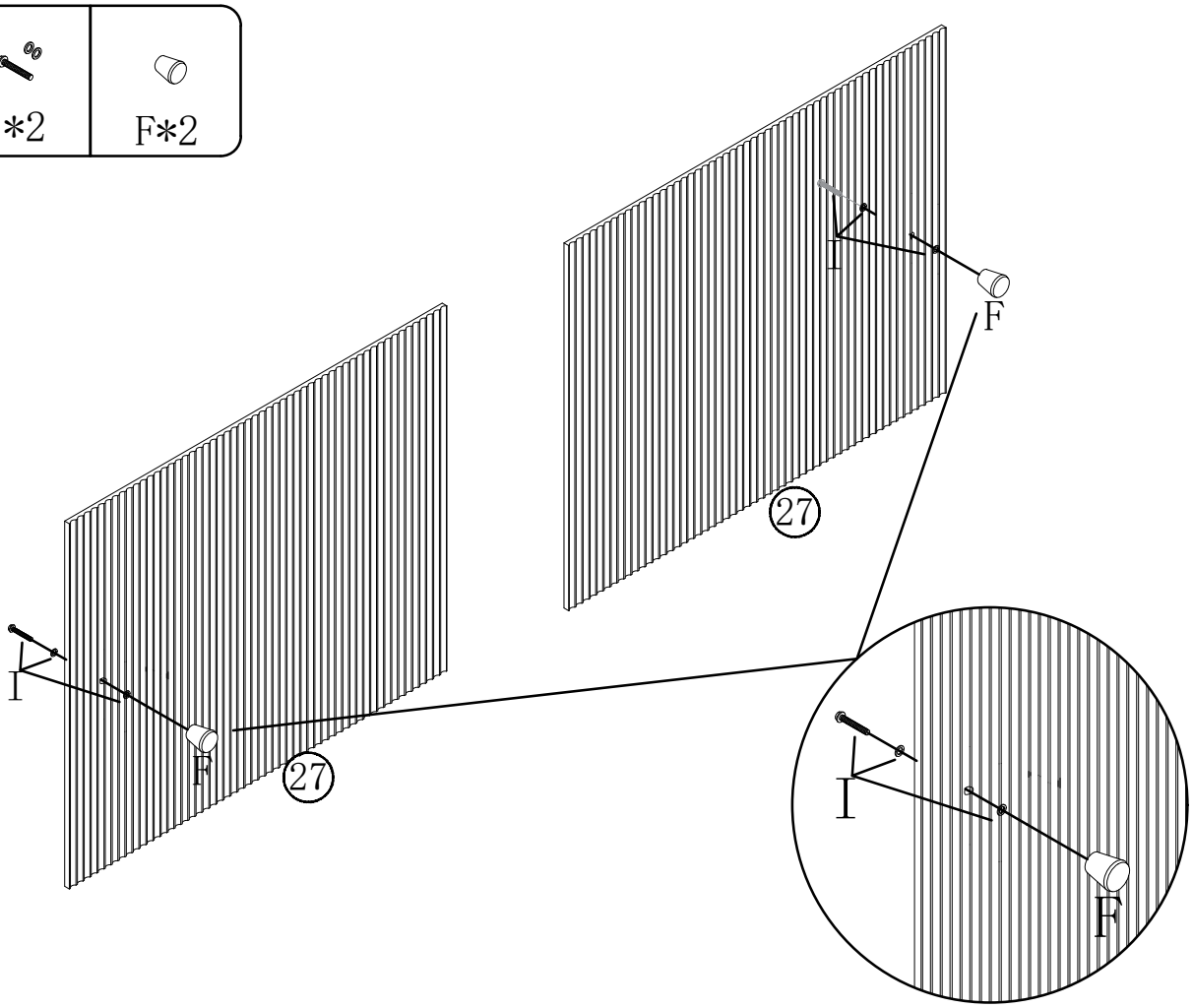

8

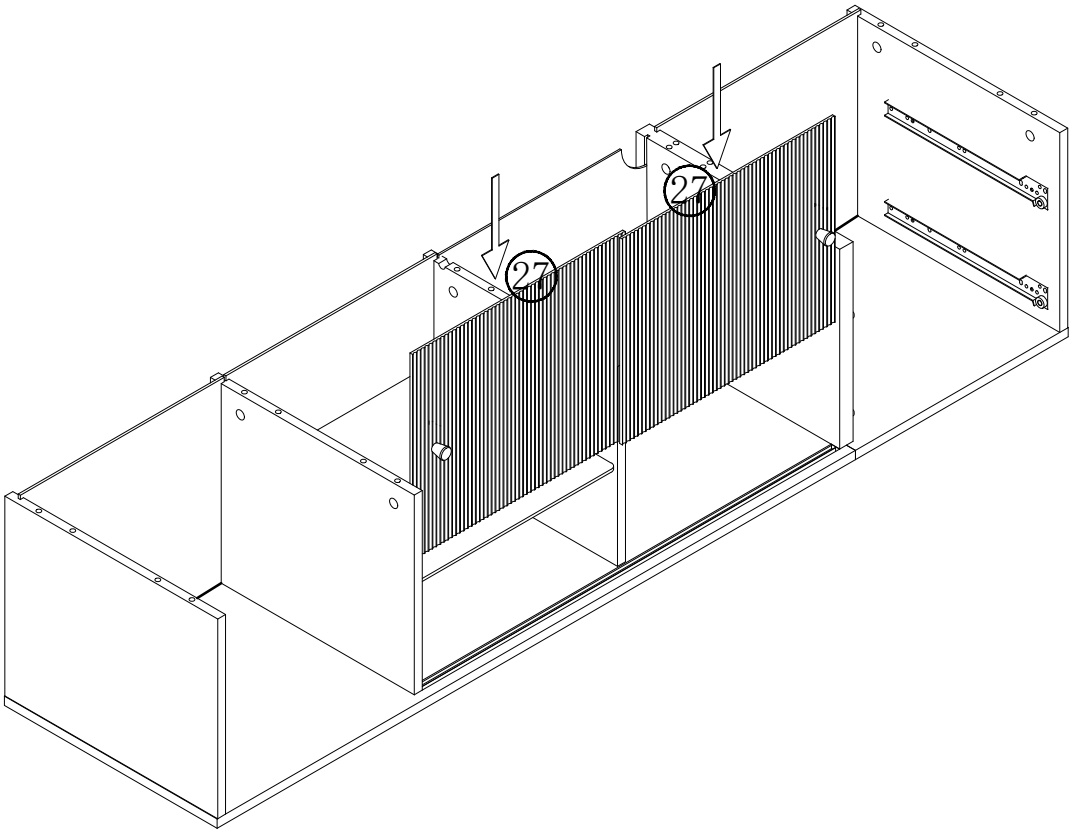

9	K*1

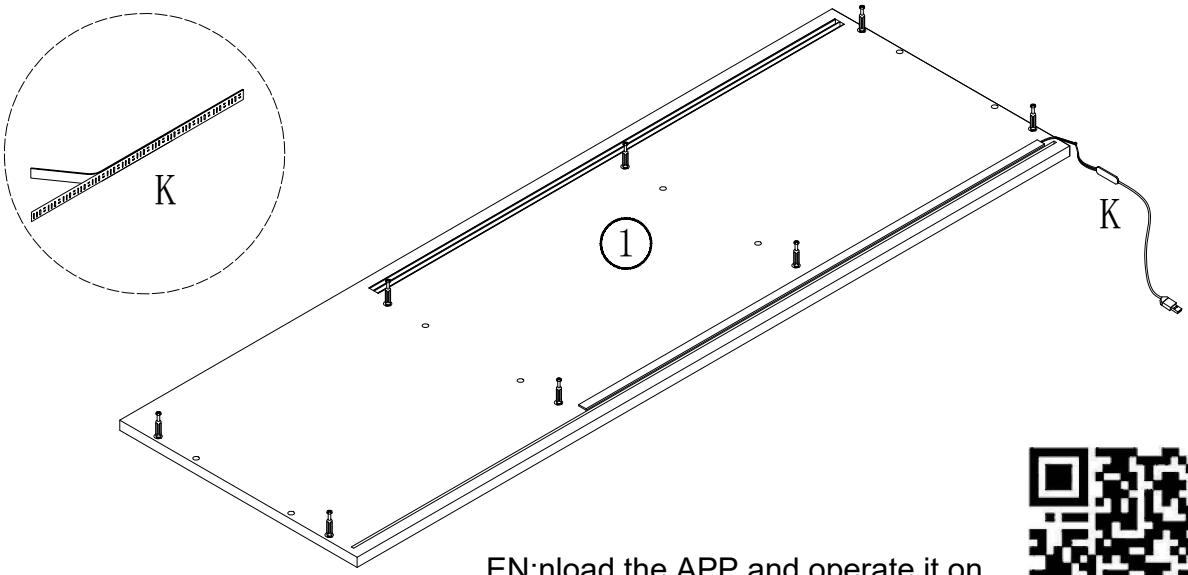

EN:nload the APP and operate it on the APP port.
DE:Laden Sie die App herunter und nutzen Sie die Funktionen direkt in der App-Oberfläche.

10	B*12	C*12

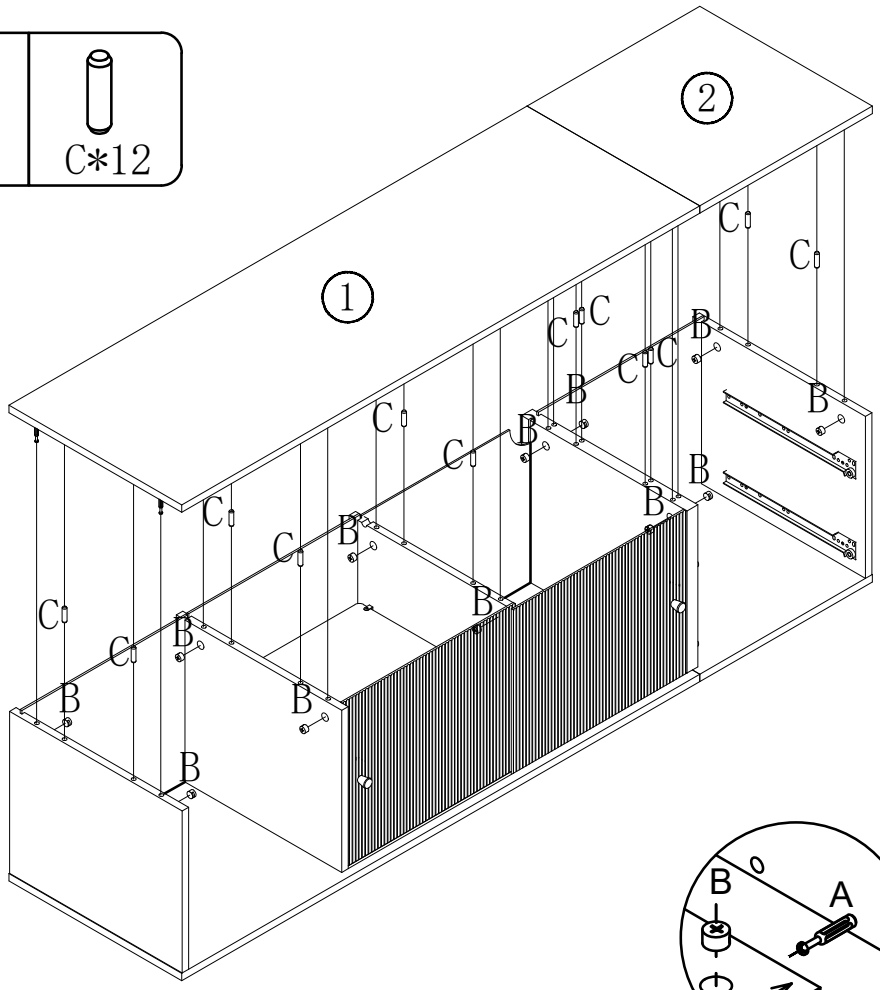

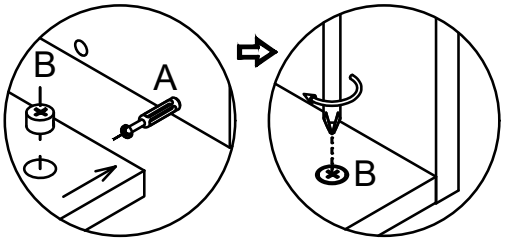

11

B*14
C*4

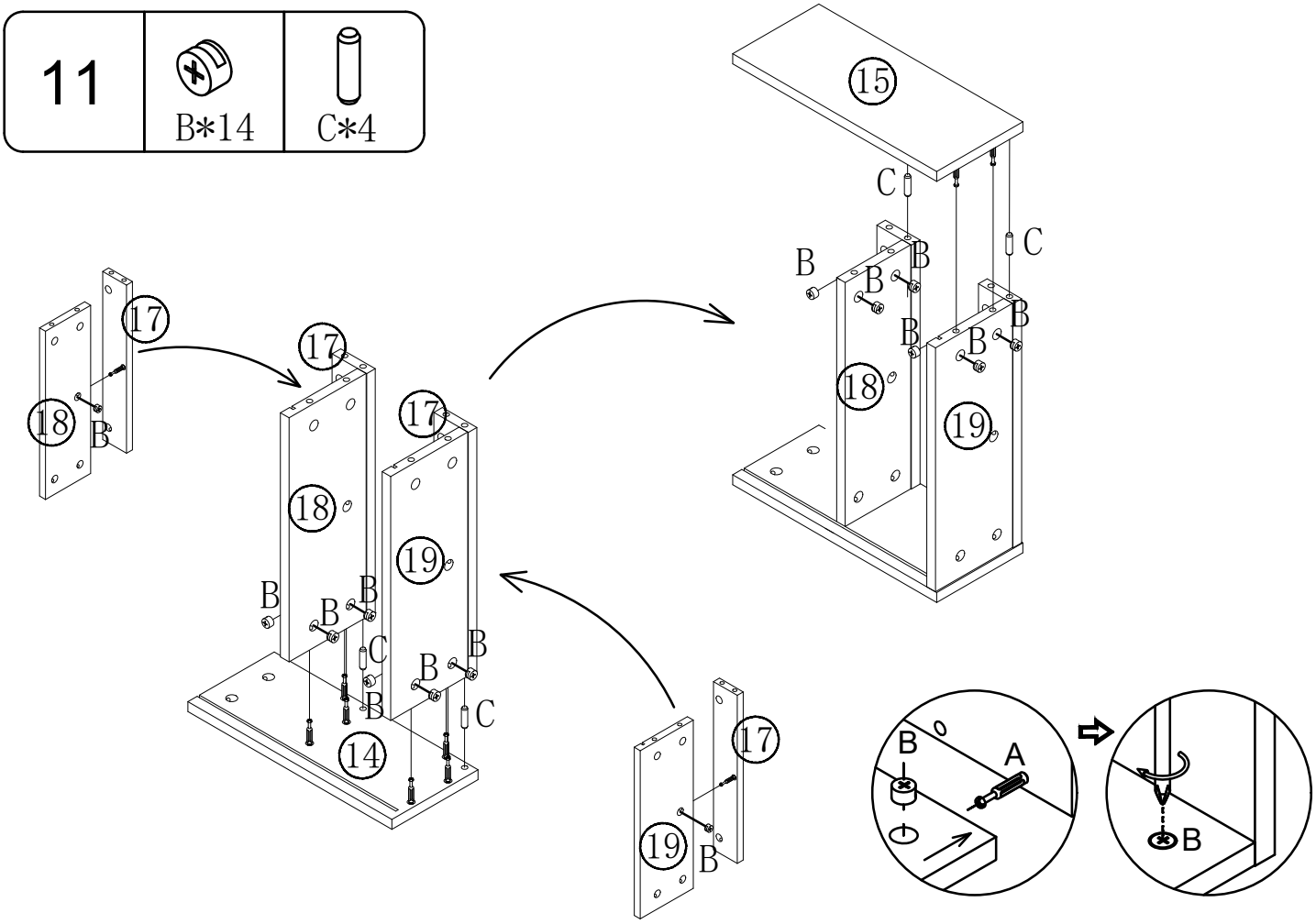
15
C
C
B
B
B
B
B
B
18
19
17
17
17
18
19
B
B
B
C
B
B
B
C
14
17
19
B
B
A
B

12

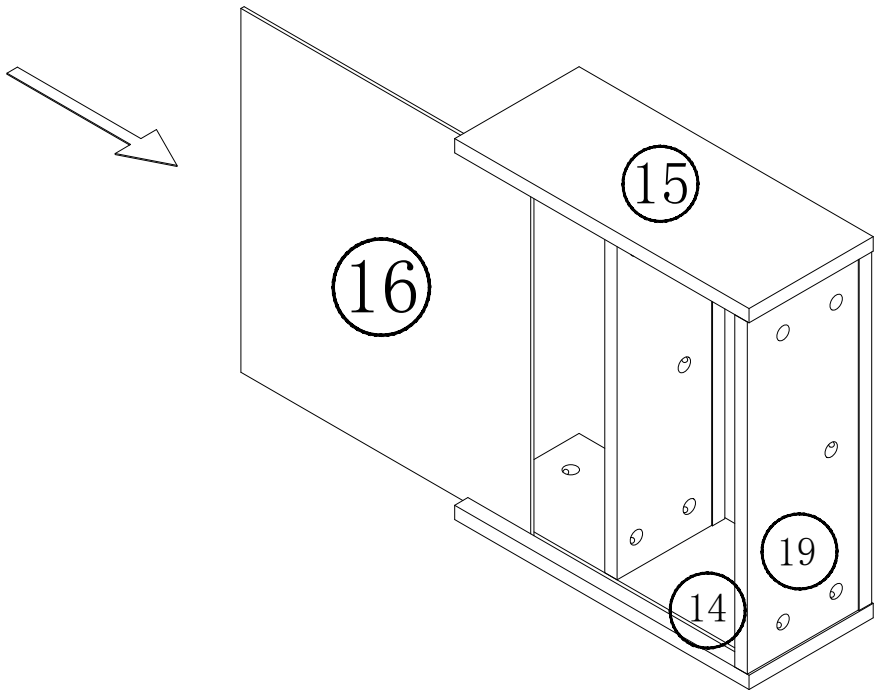
15
16
19
14

13	B*4

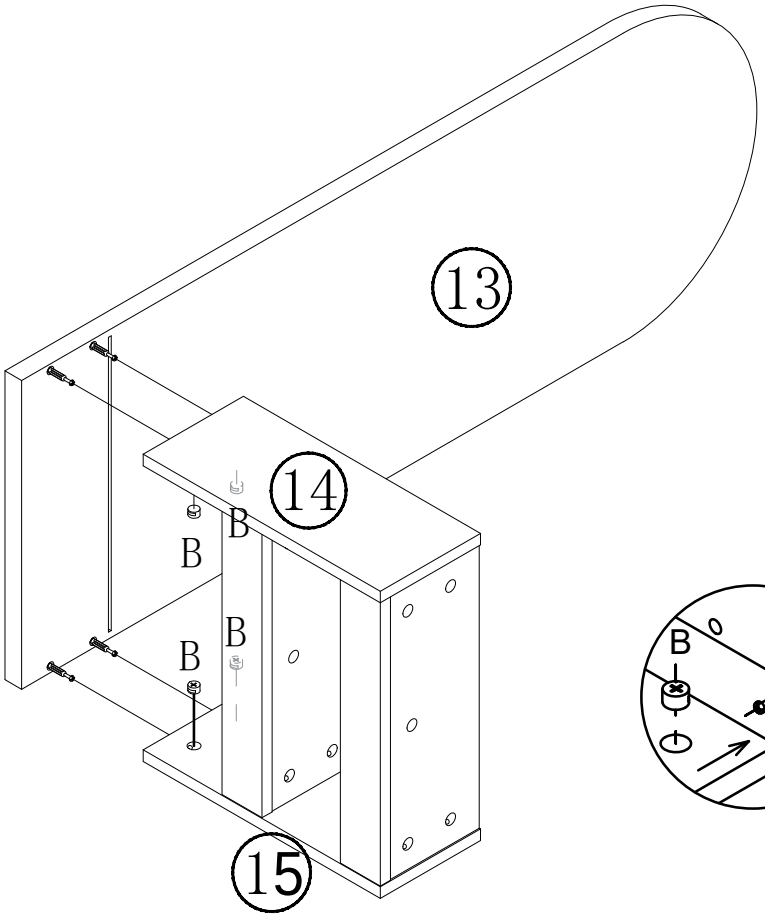

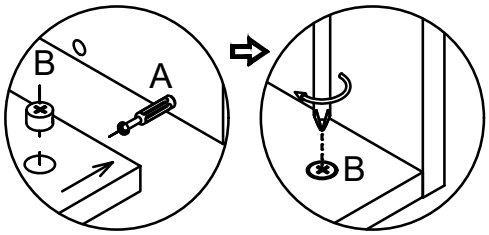

14	H*4	D*4

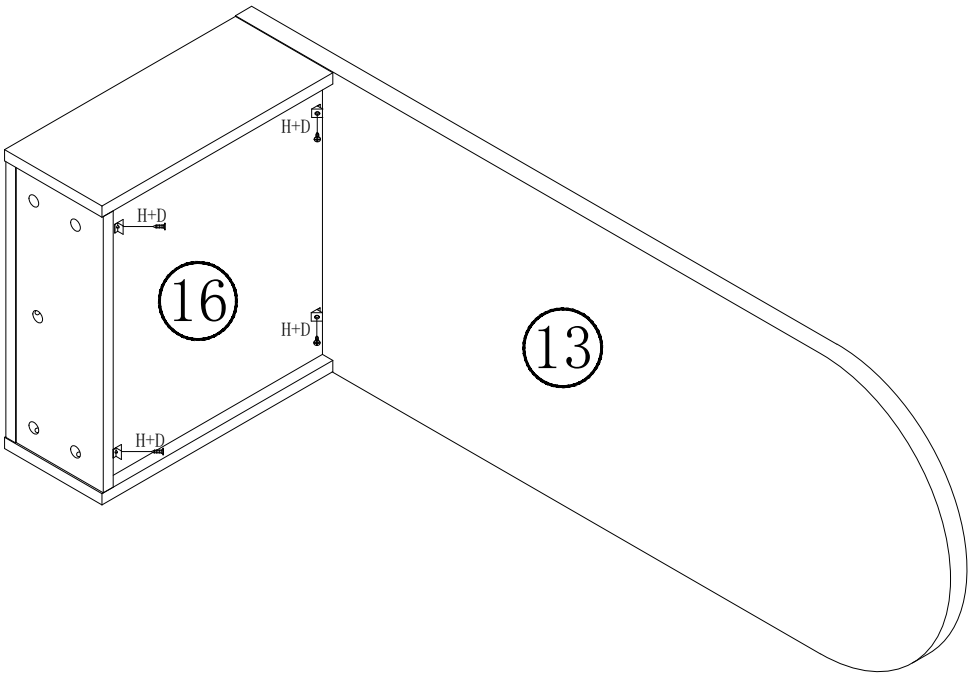

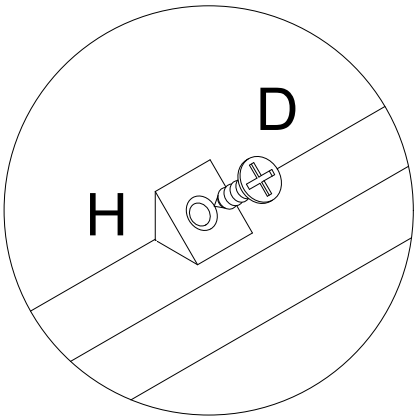

15	H*16	D*16

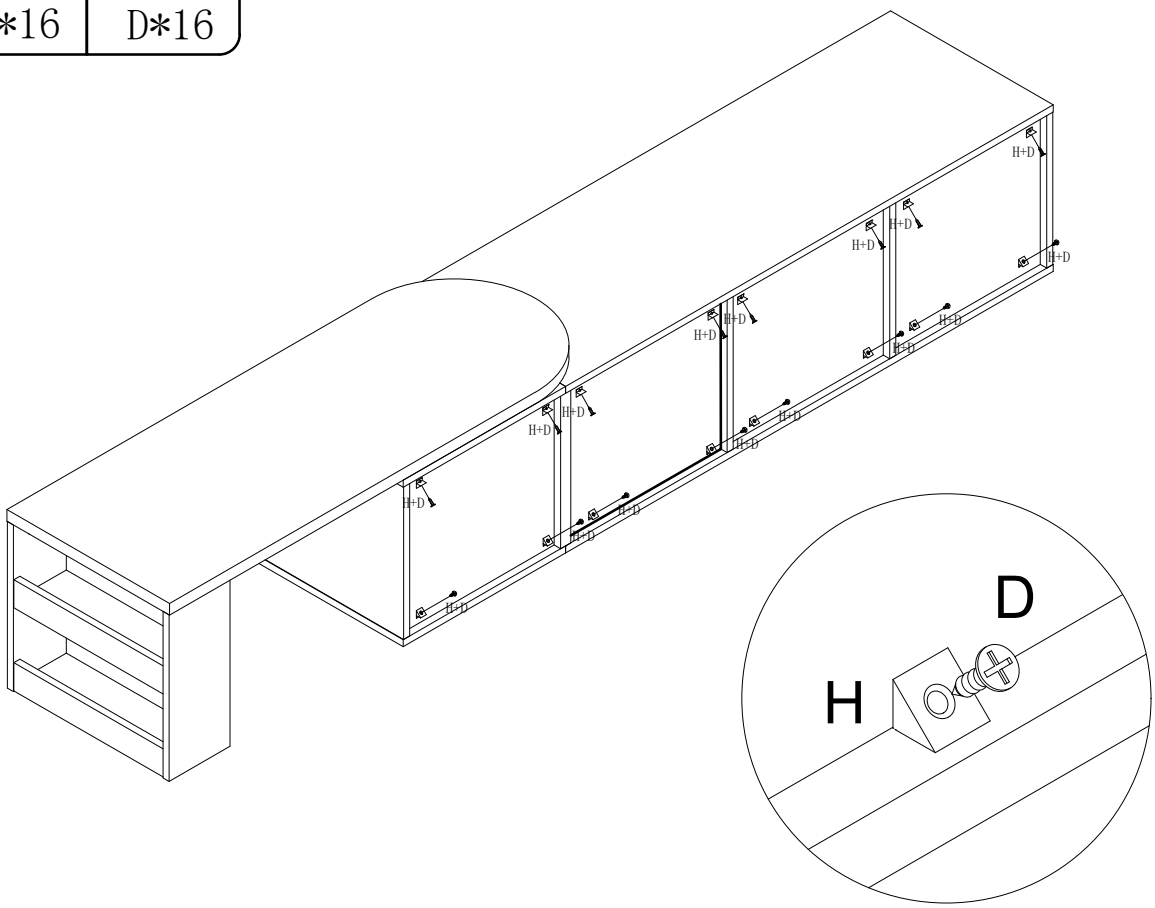

16	N*10

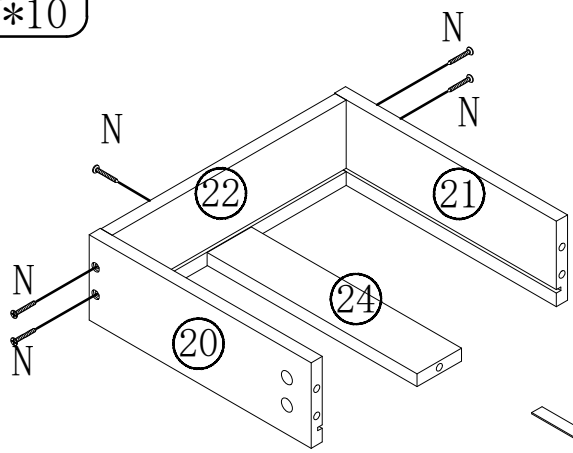

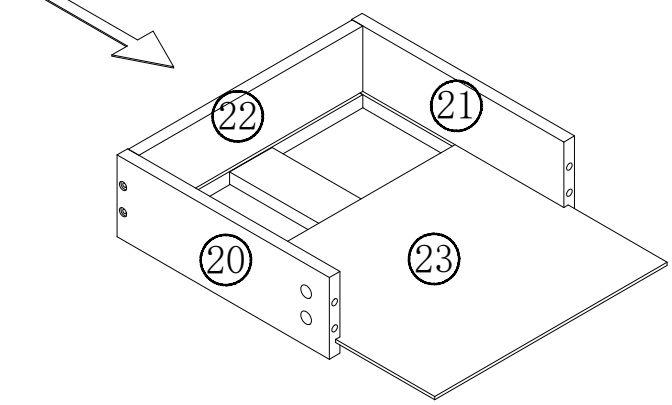

X2

17	B*10	F*2	J*2

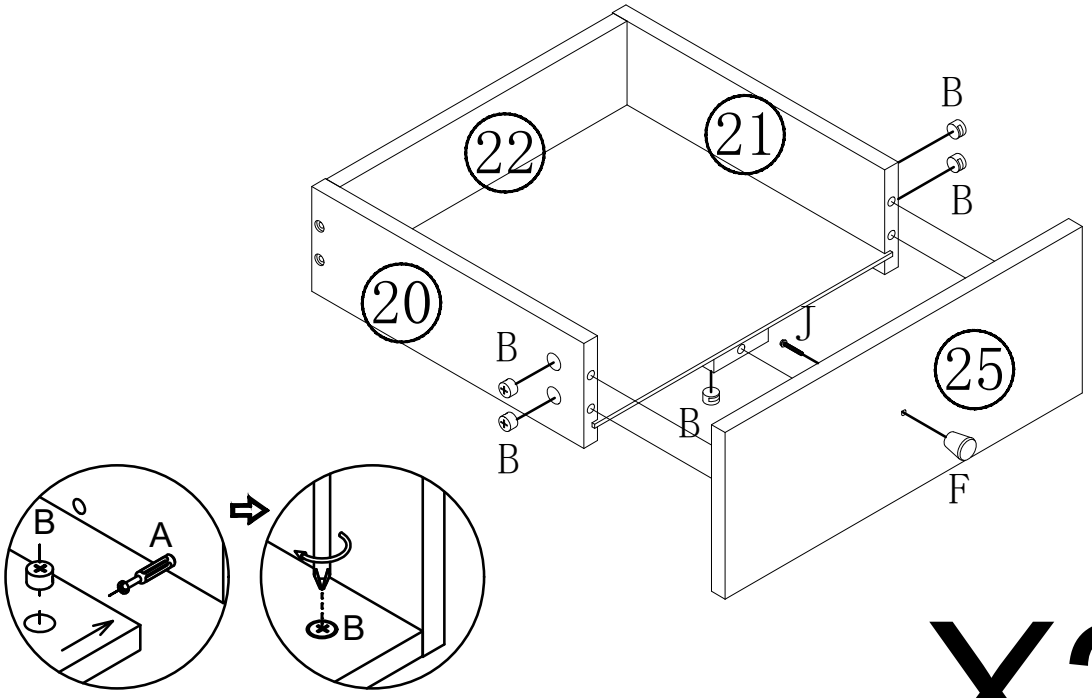

X2

18	DL DR *2	D*8

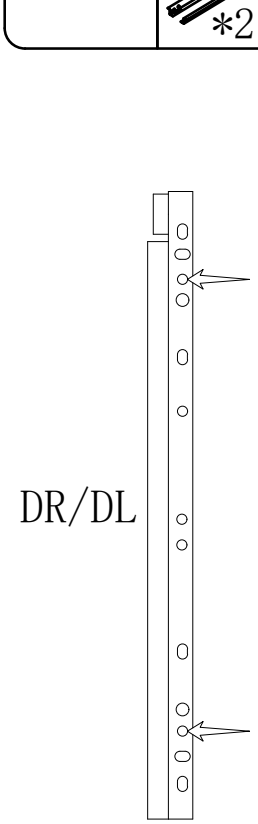

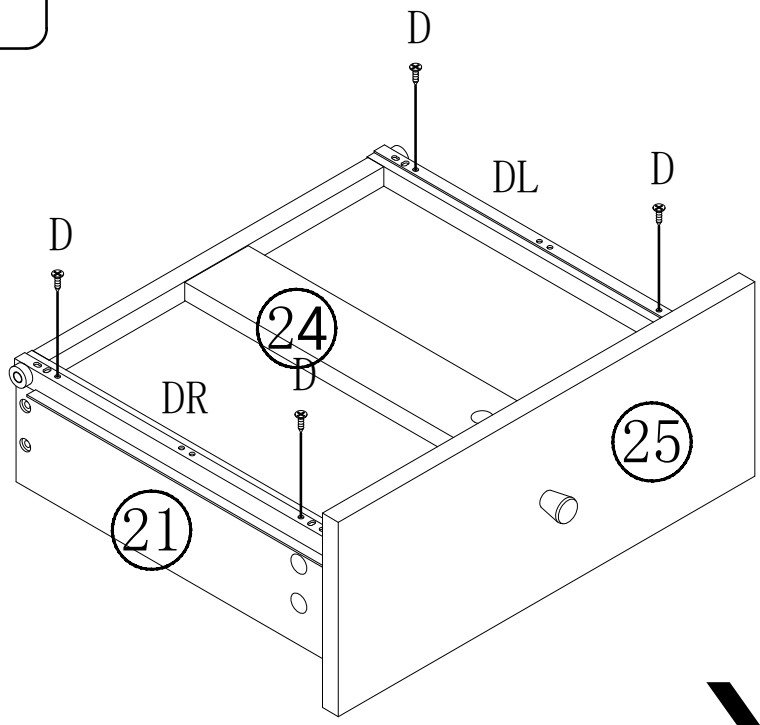

X2

19

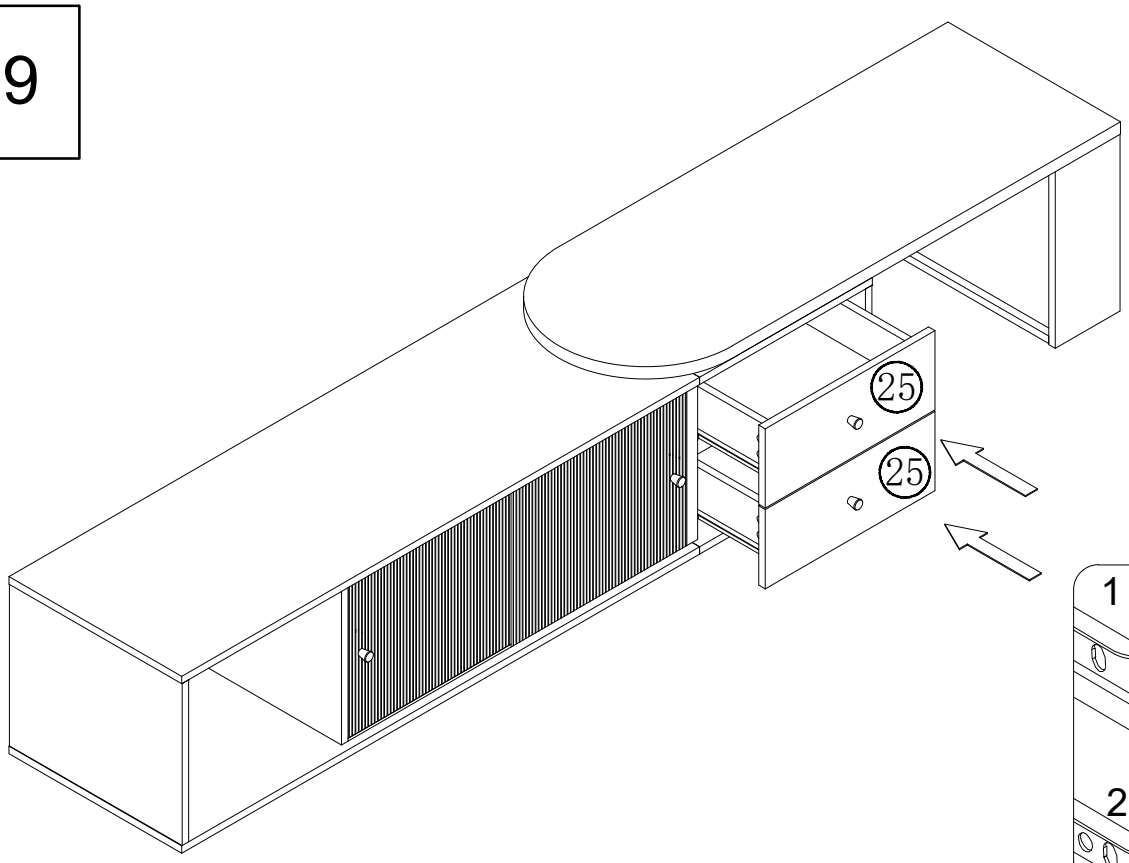

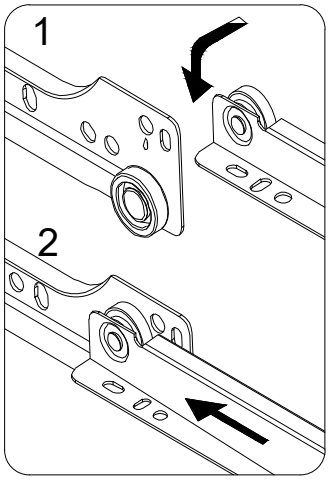

20

M*2	D*4	F*1	J*1

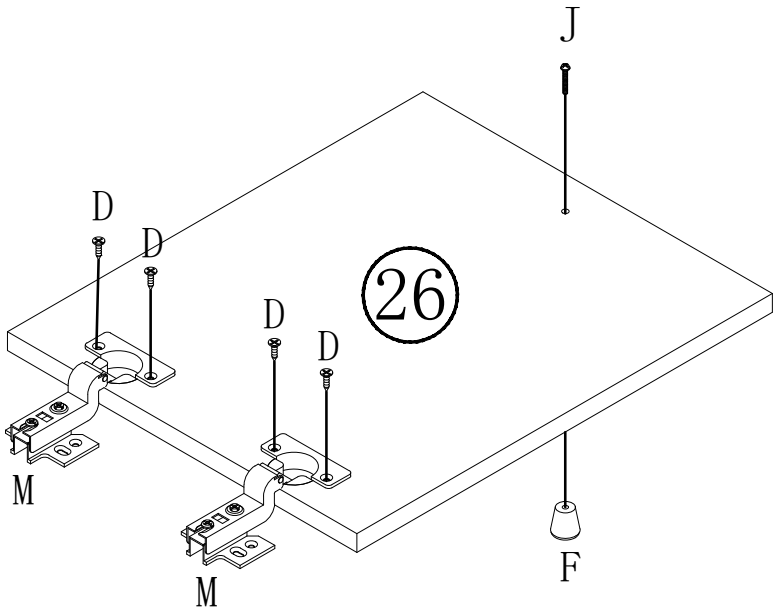

21

D*8

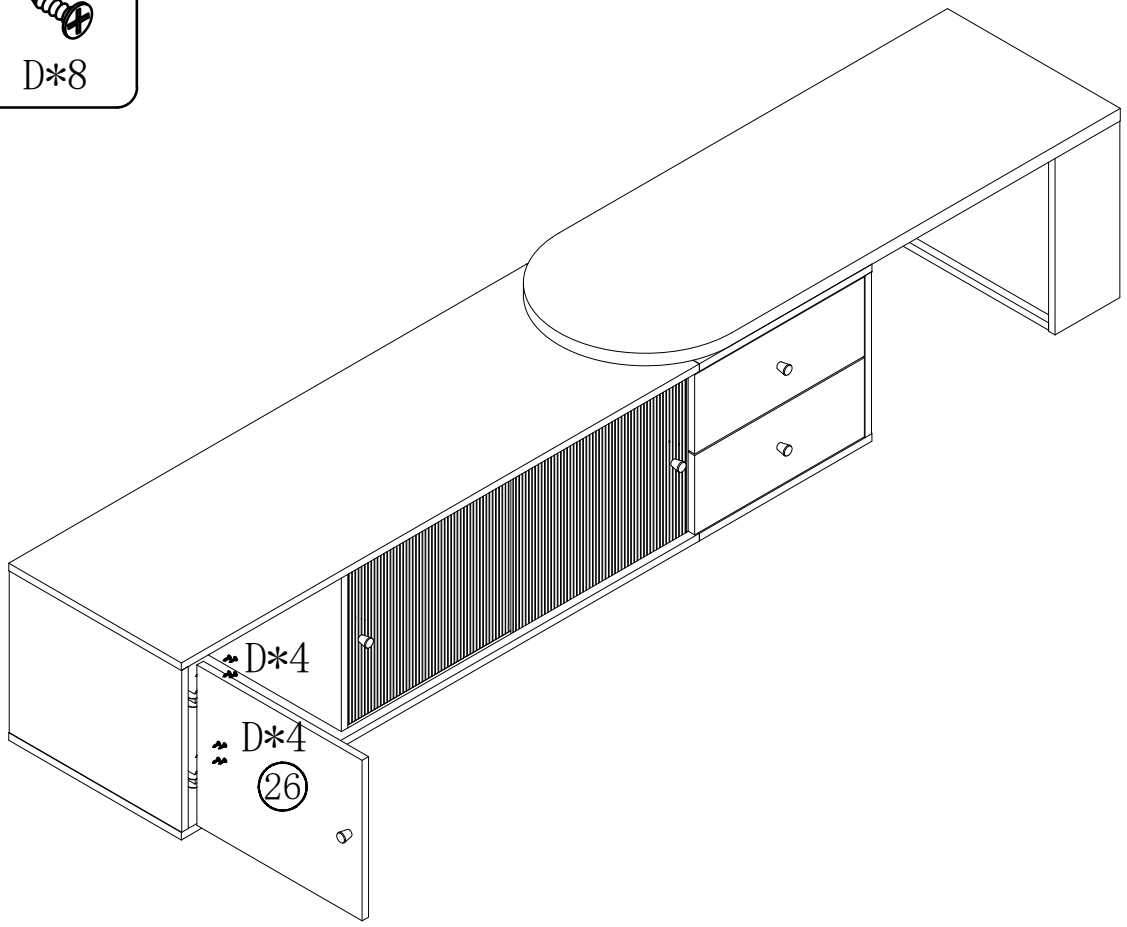

22

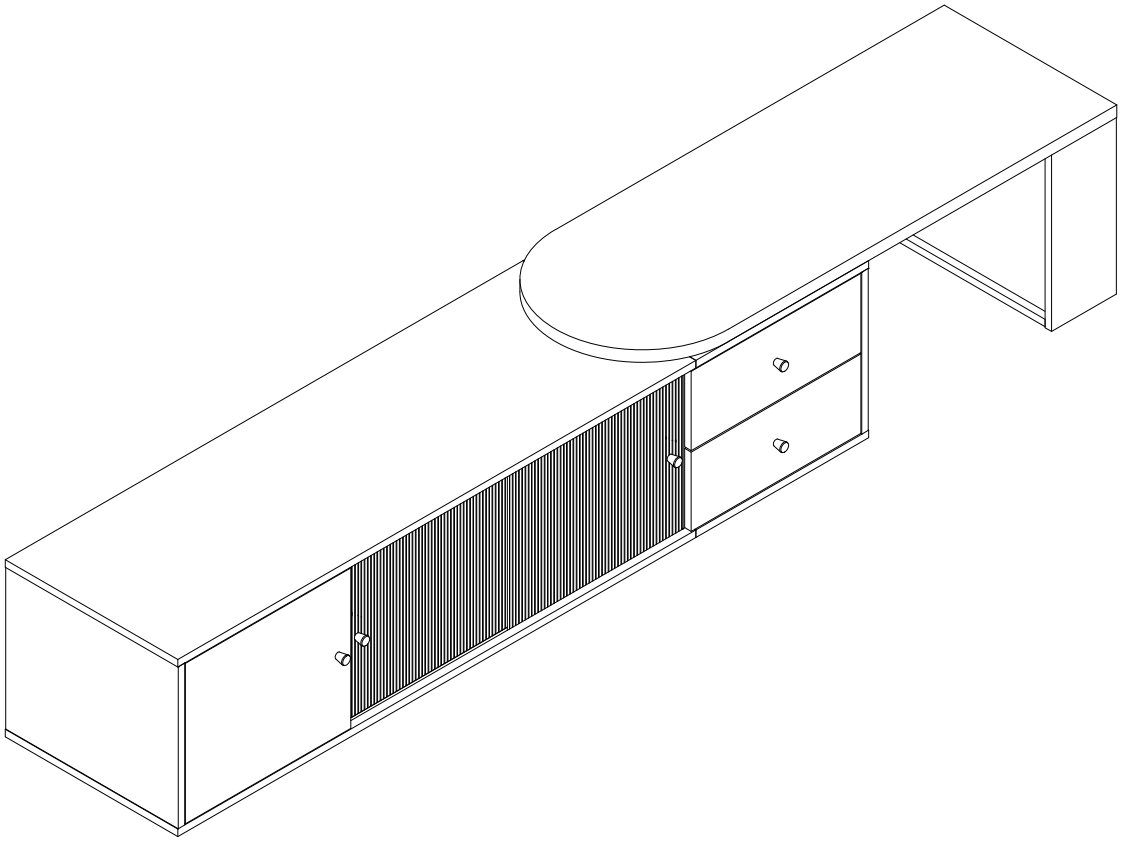

23	P x 40

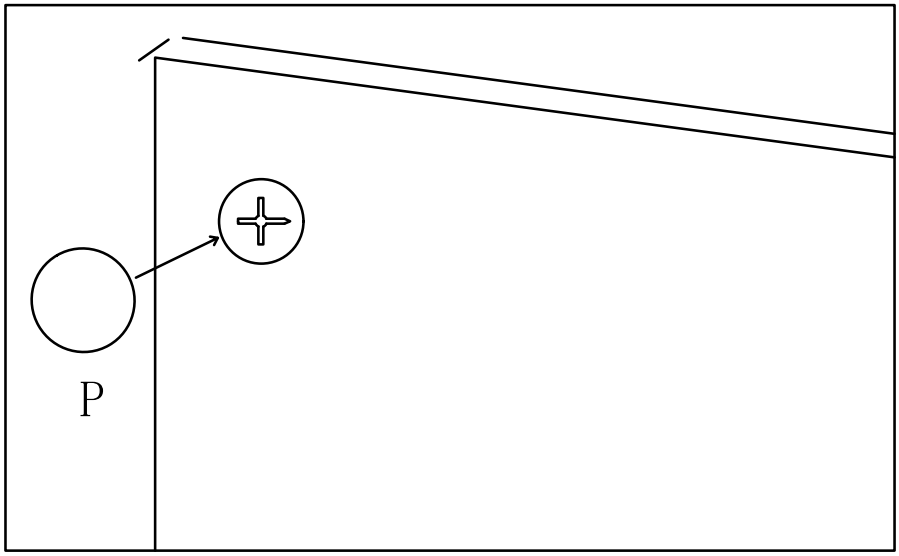

UK: After installing the product, stick the number P on the perforated position
FR: Une fois le produit installé, collez le numéro P à l'endroit où il y a des trous
DE: Nach der Installation des Produkts kleben Sie die Nummer P auf die perforierte Position
IT:Dopo linstallazione del prodotto, fissare il numero P sulla posizione perforata
ES:Después de instalar el producto, pegue el número P en la posición perforada

Certificate – Сертификат – 證明書 – Certificat – 증명서 – شهادة

Shenzhen ZKT Technology Co., Ltd.
1/F, No. 101, Building B, No. 6, Tangwei Community Industrial Avenue,
Fuhai Street, Bao'an District, Shenzhen, China

Certificate of Compliance

Certificate Number: ZKT-260114L0992C

Certificate's Holder	:	**Shenzhen Lanling Optoelectronics Technology Co., Ltd**
Address	:	**511-G5, Building C, No. 101 Fukang Road, Henggang Community, Henggang Street, Longgang District, Shenzhen City, Guangdong Province**
Manufacturer	:	**Shenzhen Lanling Optoelectronics Technology Co., Ltd**
Address	:	**511-G5, Building C, No. 101 Fukang Road, Henggang Community, Henggang Street, Longgang District, Shenzhen City, Guangdong Province**
Product	:	**Controller strip lights**
Trade Mark	:	**/**
Model(s)	:	**YH-358 LL-LED5050X60, LL-LED5050X18, LL-LED5050X30, LL-LED5050X48, LL-LED5050X60, LL-LED5050X72, LL-LED5050X90, LL-LED5050X120, LL-LED2835X30, LL-LED2835X60, LL-LED2835X120, LL-LED2835X180, LL-LED2835X240, LL-LED3528X30, LL-LED3528X60, LL-LED3528X120, LL-LED3528X240, LL-LED5730X60, LL-LED5730X72, LL-LED5730X84, LL-LED3535X60, LL-LED3535X120, CWG-5050RGB-60D-5v**
Test Method	:	**IEC 62321-5:2013 & IEC 62321-4:2013+A1:2017 & IEC 62321-7-2:2017 & IEC 62321-6:2015 & IEC 62321-8:2017 & IEC 62321-3-1:2013 & IEC 62321-7-1:2015**

The following products have been tested by us and found in conformity with the (RoHS) Directive 2011/65/EU Annex II amending Annex (EU)2015/863 and amending Annex (EU)2017/2102. It is possible to use CE Marking to demonstrate the conformity with this Directive.It is only valid in connection with the test report number: ZKT-260114L0992R. After preparation of the necessary technical documentation according the requirement of EN IEC 63000:2018 as well as the verification of conformity the CE marking as shown below can be affixed on the equipment.

RoHS

Shenzhen ZKT Technology Co., Ltd.
Approved
Manager
Jan, 15, 2026

This Certificate of Conformity is based on single evaluation of the submitted sample(s) of the above mentioned product. It does not imply an assessment of the whole product and relevant . Directives to be observed.

☎ +86-400 000 9970 +86-755-22336688 zkt@zkt-lab.com www.zkt-lab.com

Certificate – Сертификат – 證明書 – Certificat – 증명서 – شهادة

Shenzhen ZKT Technology Co., Ltd.
1/F, No. 101, Building B, No. 6, Tangwei Community Industrial Avenue,
Fuhai Street, Bao'an District, Shenzhen, China

Certificate of Compliance

Certificate Number: ZKT-250902L21450C

Certificate's Holder	:	Shenzhen Lanling Optoelectronics Technology Co., Ltd 511-G5, Building C, No. 101 Fukang Road, Henggang Community, Henggang Street, Longgang District, Shenzhen City, Guangdong Province
Manufacturer	:	Shenzhen Lanling Optoelectronics Technology Co., Ltd 511-G5, Building C, No. 101 Fukang Road, Henggang Community, Henggang Street, Longgang District, Shenzhen City, Guangdong Province
Trade Mark	:	/
Product	:	LED Strip
Model(s)	:	CWG-5050RGB-60D-5v LED5050X18, LED5050X30, LED5050X48, LED5050X60, LED5050X72, LED5050X90, LED5050X120, LED2835X30, LED2835X60, LED2835X120, LED2835X180, LED2835X240, LED3528X30, LED3528X60, LED3528X120, LED3528X240, LED5730X60, LED5730X72, LED5730X84, LED3535X60, LED3535X120
Test Standard	:	EN IEC 62031:2020+A11:2021

This Attestation of Compliance is issued on a voluntary basis for electrical equipment below the voltage limits of Low Voltage Directive 2014/35/EU. The essential requirement are fulfilled accordingly based on the technical specifications applicable at the time of issuance. See also notes overleaf. It is only valid in connection with the test report number: ZKT-250902L21450S.

CE

Approved
Manager
May 27, 2025

This Certificate of Conformity is based on single evaluation of the submitted sample(s) of the above mentioned product. It does not imply an assessment of the whole product and relevant . Directives to be observed.

☎ +86-400 000 9970 🖷 +86-755-22336688 ✉ zkt@zkt-lab.com 🌐 www.zkt-lab.com

Certificate – Сертификат – 證明書 – Certificat – 증명서 – شهادة

Shenzhen ZKT Technology Co., Ltd.
1/F, No. 101, Building B, No. 6, Tangwei Community Industrial Avenue,
Fuhai Street, Bao'an District, Shenzhen, China

Certificate of Compliance

Certificate Number: ZKT-250902L21449C

Certificate's Holder	:	Shenzhen Lanling Optoelectronics Technology Co., Ltd 511-G5, Building C, No. 101 Fukang Road, Henggang Community, Henggang Street, Longgang District, Shenzhen City, Guangdong Province
Manufacturer	:	Shenzhen Lanling Optoelectronics Technology Co., Ltd 511-G5, Building C, No. 101 Fukang Road, Henggang Community, Henggang Street, Longgang District, Shenzhen City, Guangdong Province
Trade Mark	:	/
Product	:	LED Strip
Model(s)	:	CWG-5050RGB-60D-5V LED5050X18, LED5050X30, LED5050X48, LED5050X72, LED5050X90, LED5050X120, LED2835X30, LED2835X60, LED2835X120, LED2835X180, LED2835X240, LED3528X30, LED3528X60, LED3528X120, LED3528X240, LED5730X60, LED5730X72, LED5730X84, LED3535X60, LED3535X120
Test Standard	:	EN IEC 55015:2019+A11:2020 EN IEC 61000-3-2:2019 + A1:2021 + A2:2024 EN 61000-3-3:2013 + A1:2019 + A2:2021 EN IEC 61547:2023

This Attestation of Compliance is issued on a voluntary basis for electrical equipment below the voltage limits of EMC Directive 2014/30/EU. The essential requirements are fulfilled accordingly based on the technical specifications applicable at the time of issuance. See also notes overleaf. It is only valid in connection with the test report number: ZKT-250902L21449E.

CE

Approved
Manager
May 27, 2025

This Certificate of Conformity is based on single evaluation of the submitted sample(s) of the above mentioned product. It does not imply an assessment of the whole product and relevant . Directives to be observed.

☎ +86-400 000 9970 🖷 +86-755-22336688 ✉ zkt@zkt-lab.com 🌐 www.zkt-lab.com

Certificate – Certificat – 證明書 – 인증서 – شهادة

Shenzhen ZKT Technology Co., Ltd.
1/F, No. 101, Building B, No. 6, Tangwei Community Industrial Avenue,
Fuhai Street, Bao'an District, Shenzhen, China

Certificate of Compliance

Certificate Number: ZKT-260105L0127C

Certificate's Holder : Shenzhen Lanling Optoelectronics Technology Co., Ltd 511-G5, Building C, No. 101 Fukang Road, Henggang Community, Henggang Street, Longgang District, Shenzhen City, Guangdong Province

Manufacturer : Shenzhen Lanling Optoelectronics Technology Co., Ltd 511-G5, Building C, No. 101 Fukang Road, Henggang Community, Henggang Street, Longgang District, Shenzhen City, Guangdong Province

Trade Mark : /

Product : Controller strip lights

Model(s) : YH-358

REQUIREMENT	STANDARD	Report No.
Art.3.1(a) Safety	EN 60598-2-21:2015 EN IEC 60598-1:2024+A11:2024 EN IEC 62031:2020+A11:2021	ZKT-260105L0128S
Art.3.1(a) Health	EN 62479:2010 EN 50663:2017	ZKT-260105L0127E-3
Art.3.1(b) EMC	ETSI EN 301 489-1 V2.2.3 (2019-11) ETSI EN 301 489-17 V3.3.1 (2024-09) EN IEC 61000-3-2:2019 + A1:2021 + A2:2024 EN 61000-3-3:2013 + A1:2019 + A2:2021	ZKT-260105L0127E-1
Art.3.2 Radio	ETSI EN 300 328 V2.2.2 (2019-07)	ZKT-260105L0127E-2

This Attestation of Compliance is issued on for electrical equipment below the voltage limits of Radio Equipment Directive (RED) 2014/53/EU. The essential requirement are fulfilled accordingly based on the technical specifications applicable at the time of issuance.

CE

Approved
Manager
Nov. 17, 2025

This Certificate of Conformity is based on single evaluation of the submitted sample(s) of the above mentioned product. It does not imply an assessment of the whole product and relevant . Directives to be observed.

☎ +86-400 000 9970 +86-755-22336688 zkt@zkt-lab.com www.zkt-lab.com

CERTIFICATE OF COMPLIANCE

Certificate of Compliance

Certificate Number: ZHT-260114129E02C

Certificate's Holder Zertifikatsinhaber	:	Shenzhen Lanling Optoelectronics Technology Co., Ltd 511-G5, Building C, No. 101 Fukang Road, Henggang Community, Henggang Street, Longgang District, Shenzhen City, Guangdong Province
Manufacturer Hersteller	:	Shenzhen Lanling Optoelectronics Technology Co., Ltd 511-G5, Building C, No. 101 Fukang Road, Henggang Community, Henggang Street, Longgang District, Shenzhen City, Guangdong Province
Trade Mark Warenzeichen	:	/
Product Produkt	:	LED Strip
Model(s) Modell	:	Please refer to the attachment on page 2
Test Standard Prüfnorm	:	BS EN IEC 55015:2019+A11:2020 BS EN IEC 61547:2023 BS EN IEC 61000-3-2:2019+A2:2024 BS EN 61000-3-3:2013+A2:2021
Test Report No. Bericht Nr	:	ZHT-260114129E02

This certificate of compliance is issued according to the UK legislation:Electromagnetic Compatibility Regulations 2016(S.I. 2016/1091), Referred to as the UK Electromagnetic Compatibility.
It confirms that the listed product complies with all essential requirements of the Electromagnetic Compatibility Regulations 2016 and applies only to the sample and its technical documentation submitted to Guangdong Zhonghan Testing Technology Co., Ltd.(ZHT) for testing.
It is only valid in connection with the test report number: ZHT-260114129E02.
So ZHT here by acknowledges that the Manufacturer may issue a COC apply the UKCA marketing in according with United Kingdom Union Rules.
After preparation of the necessary technical documentation (Which must be kept for up to 10 years after the product is placed on the GB market as well as the UK declaration of conformity, the required UKCA marking can be affixed on the product. Other relevant Regulations have to be observed.

UK CA

Manager
Jan. 16, 2026

The information of the certificate can be checked through www.zht-lab.cn.
The UKCA mark which is shown on the certificate can only be used under the conditions that the products complete with all of the relevant Directives of EC Declaration of Conformity.
The Manufacturer should be responsible for the internal production control so that the products complied with the essential requirements of the above mentioned Directive(s). Certificate holder must notify all changes to the original certification laboratory of Guangdong Zhonghan Testing Technology Co., Ltd.

Guangdong Zhonghan Testing Technology Co., Ltd.
Address: Room 104/201, Building 1, Yibaolai Industrial Park, Qiaotou, Fuhai Subdistrict, Bao'an District, Shenzhen, Guangdong, China
Tel.: +86-755-27782934 Http://www.zht-lab.cn E-mail:admin@zht-lab.cn

CERTIFICATE OF COMPLIANCE

Certificate of Compliance

Certificate Number: ZHT-260114129E02C

Attachment:

Model(s)

LED5050RGBX60

LED5050RGBX18, LED5050RGBX30, LED5050RGBX48, LED5050RGBX60, LED5050RGBX72, LED5050RGBX90, LED5050RGBX120, LED5050X18, LED5050X30, LED5050X48, LED5050X60, LED5050X72, LED5050X90, LED5050X120, LED2835X30, LED2835X60, LED2835X120, LED2835X180, LED2835X240, LED3528X30, LED3528X60, LED3528X120, LED3528X240, LED5730X60, LED5730X72, LED5730X84, LED3535X60, LED3535X120, LL-LED5050X60, LL-LED5050X18, LL-LED5050X30, LL-LED5050X48, LL-LED5050X60, LL-LED5050X72, LL-LED5050X90, LL-LED5050X120, LL-LED2835X30, LL-LED2835X60, LL-LED2835X120, LL-LED2835X180, LL-LED2835X240, LL-LED3528X30, LL-LED3528X60, LL-LED3528X120, LL-LED3528X240, LL-LED5730X60, LL-LED5730X72, LL-LED5730X84, LL-LED3535X60, LL-LED3535X120, CWG-5050RGB-60D-5v

UKCA

Manager
Jan. 16, 2026

The information of the certificate can be checked through www.zht-lab.cn.
The UKCA mark which is shown on the certificate can only be used under the conditions that the products complete with all of the relevant Directives of EC Declaration of Conformity.
The Manufacturer should be responsible for the internal production control so that the products complied with the essential requirements of the above mentioned Directive(s). Certificate holder must notify all changes to the original certification laboratory of Guangdong Zhonghan Testing Technology Co., Ltd.

Guangdong Zhonghan Testing Technology Co., Ltd.
Address: Room 104/201, Building 1, Yibaolai Industrial Park, Qiaotou, Fuhai Subdistrict, Bao'an District, Shenzhen, Guangdong, China
Tel.: +86-755-27782934 Http://www.zht-lab.cn E-mail:admin@zht-lab.cn