Assembly Instruction

CBN225A

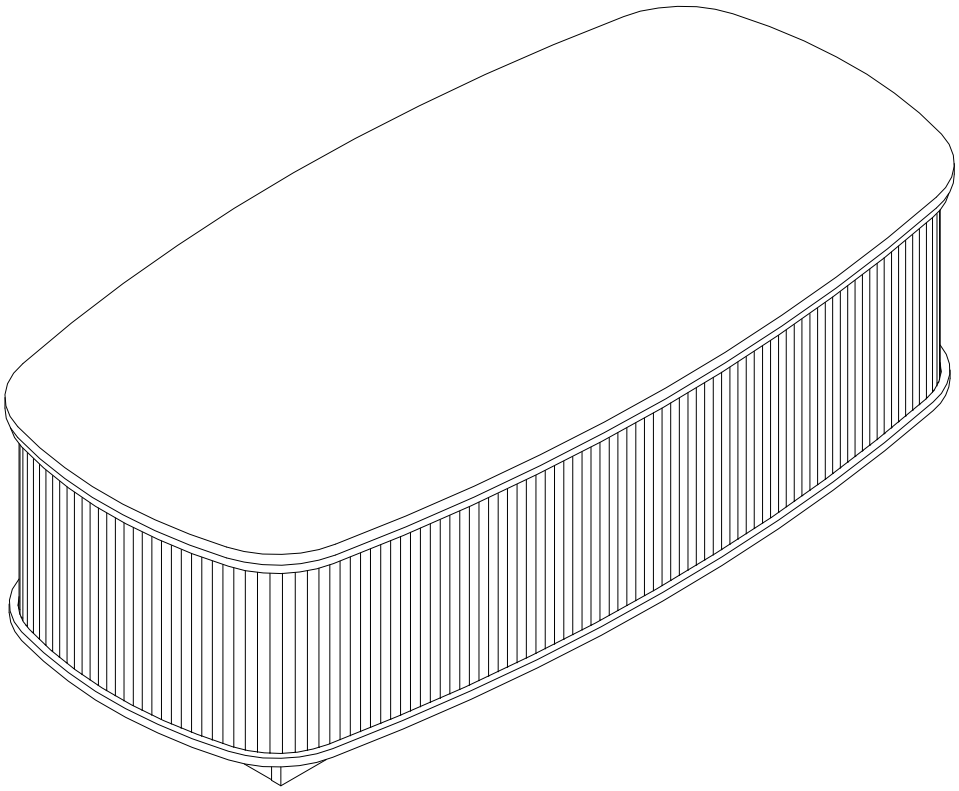

General Guidelines

- Please read the following instruction carefully and use the product accordingly.
- Please keep this manual and hand it over when you transfer the product.
- This summary may not include every detail of all variations and considered steps. Please contact us when further information and help are needed.

Notes

- The product is intended for indoor use only. The product must be assembled and used in accordance with the provisions of the manual. Personal injury and/or damage to product may occur if products are used outside of their intended purposes and/or if products have been changed/modified from their original design. The seller does not assume any responsibility or liability with respect to any injury/damage caused by incorrect assembly or improper use.
- Avoid long-term exposure to humid environments to prevent mildew.
- Keep the product away from fire sources and high temperatures. Do not expose the product to direct sunlight.
- Do not place any hot objects on the surface of the product.
- If there are any defective or missing parts after unpacking, please cease assembly immediately and contact us.
- Please assemble the item on a spacious surface and do not place the unwrapped product directly on the ground to avoid product damage.
- Please do not stand or sit on the wooden boards.
- Please wear gloves during the assembly and/or disassembly process to avoid scratches from any sharp edges.
- Please match the corresponding part and fitting based on the part number in the manual.
- If the part does not match with the fitting, please check the piece as specified in this manual.
- During assembly, first loosely align all screws with the corresponding pre-drilled holes and then tighten the screws one by one.
- Periodically inspect screw tightness while the product is in use. If necessary, retighten to ensure structural integrity.
- If you accidentally spill water or another liquid on the surface, immediately wipe clean with a dry towel.
- Please keep the product away from sharp, pointed objects and corrosive substances to prevent product damage.
- Please place this item on level, solid ground during use.

Warnings

- During assembly, keep all small parts out of the reach of children. It may be fatal if swallowed or inhaled.
- Children should not climb or play on the product in order to avoid tipping over the furniture and causing serious injury.
- To avoid the potential dangers of suffocation, please keep all parts and packaging (film, plastic bags, foam, etc.) away from babies and children.
- Keep sharp objects and corrosive items away from the product to avoid any damage or injury.
- Do not shake or move violently during use to avoid tipping over the product.

Parts List(EN)

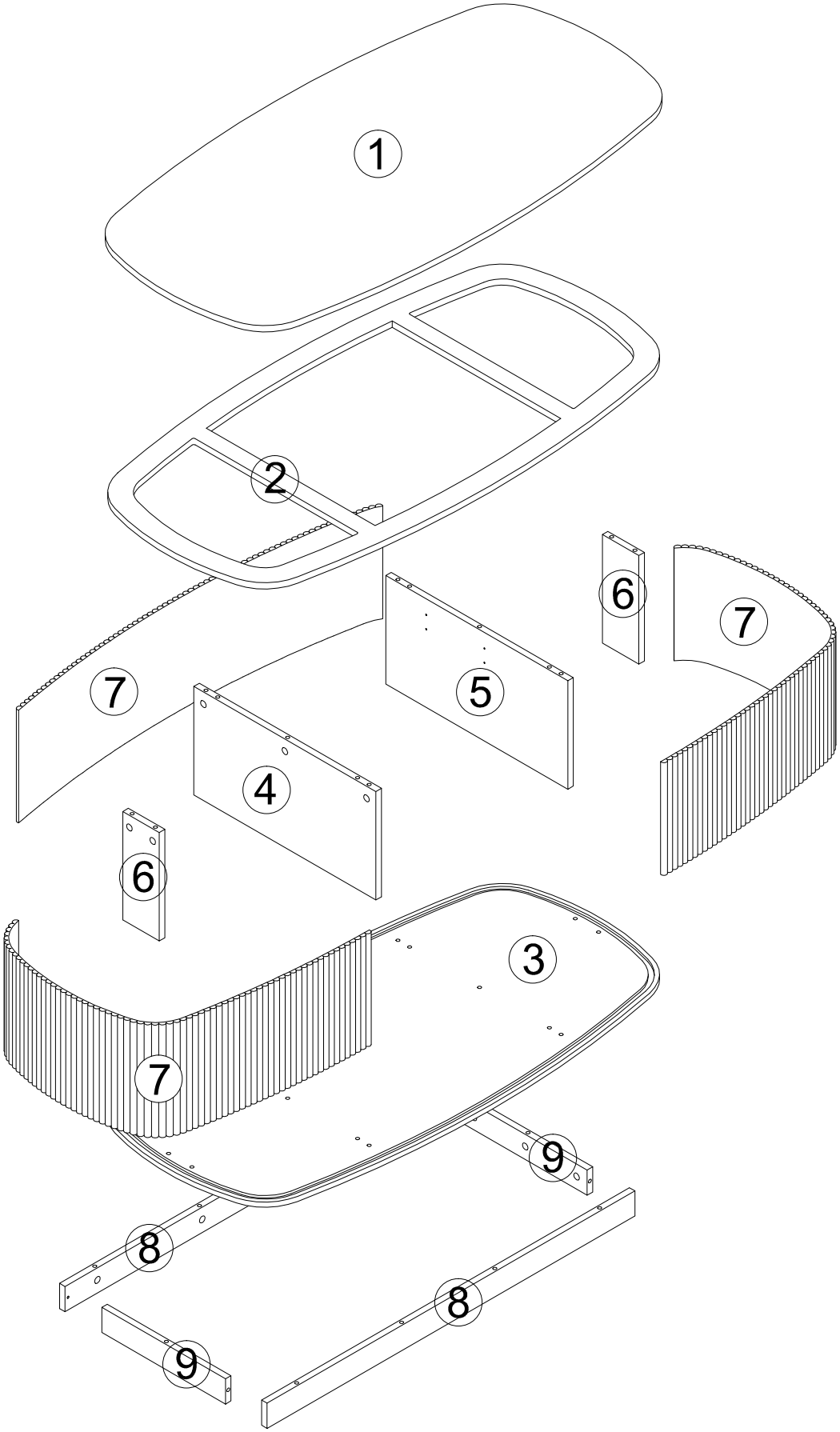

Parts List(EN)

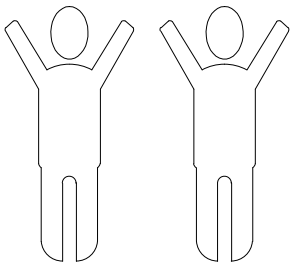

It takes two people to work together to assemble the product.

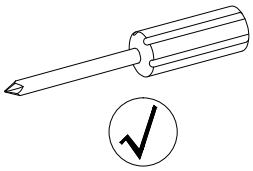

Recommended to use a screwdriver to assemble the product

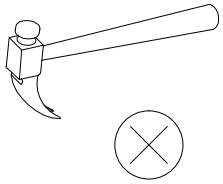

Do not use a hammer, it might damage the board.

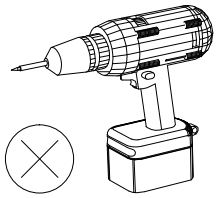

The use of an electric wrench is not recommended.If used, please set the torque to the minimum.

① 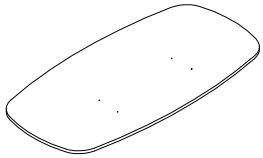 1PC	② 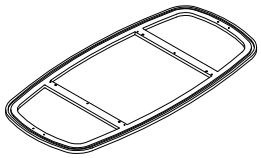 1PC	③ 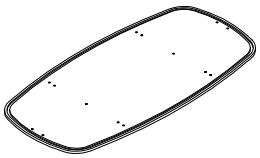 1PC	④ 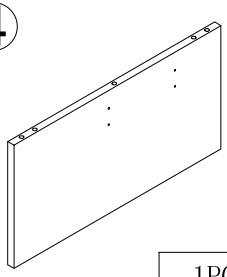 1PC
⑤ 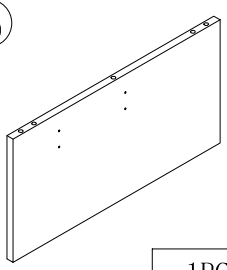 1PC	⑥ 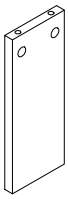 2PCS	⑦ 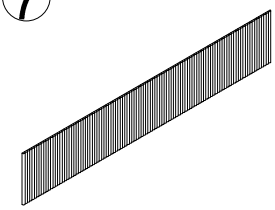 3PCS	⑧ 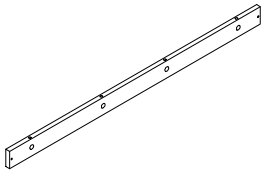 2PCS
⑨ 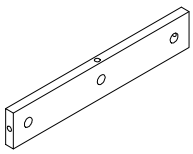 2PCS			

Parts List(EN)

No. A Quantity:24+2 Pcs Cam Lock Dowel 8*28mm 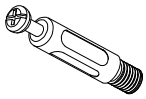	No. B Quantity:24+2 Pcs Cam φ15 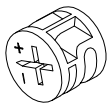	No. C Quantity:6+1 Pcs Sticker Ø20 	No. D Quantity:8+1 Pcs Dowel 8*30mm 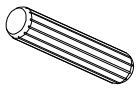
No. E Quantity:1 Sets Lifting rod 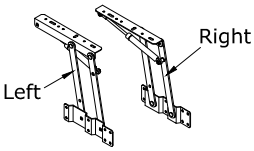	No. F Quantity:24+2 Pcs Screw M4*16mm 	No. G Quantity:10+1 Pcs Screw M6*40mm 	No. H Quantity:1 Pc Allen Key 4# 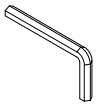
No. I Quantity:6+1 Pcs Foot Pad Ø15 	No. J Quantity:1 Pc Screwdriver 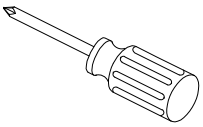		

Instructions For Fastening CAM-BOLT and CAM-LOCK

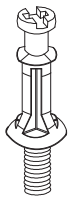

CAM-BOLT

CAM-LOCK

Tools Required

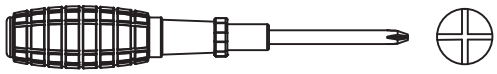

INSERTING AND TIGHTENING CAM-BOLT

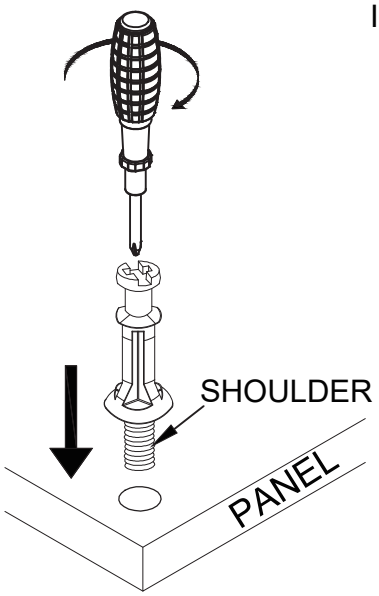

Place Cam-bolt on pre-drilled hole and screw in vertically

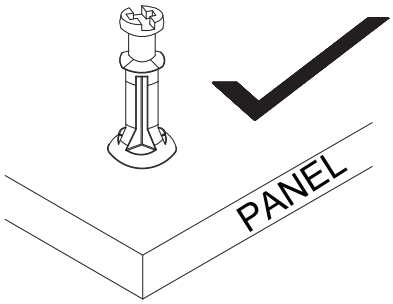

Shoulder is flushed (on the same level) with the panel.

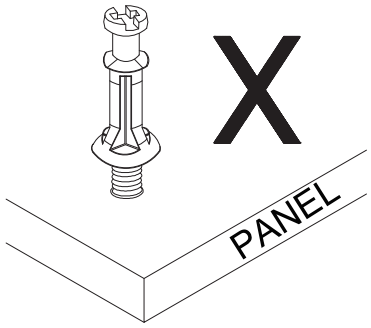

Shoulder is above the panel.

Place Cam-bolt on the designated pre-drilled holes on the panel. Use a Phillips Screwdriver to screw-in Cam-bolt vertically until shoulder is flushed (on the same level) with panel.

INSERTING CAM-LOCK

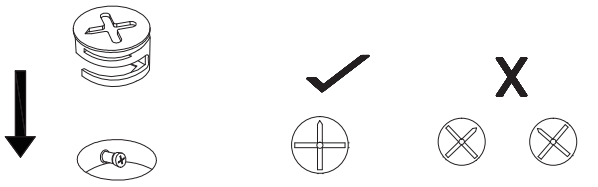

Insert Cam-lock with arrow align to Cam-bolt head

CORRECT

WRONG

Align the arrow on the Cam-lock to the Cam-bolt head and insert the Cam-lock. Ensure Cam-lock is fully inserted.

TIGHTENING CAM-LOCK

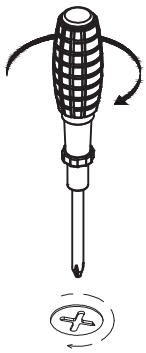

Use a Flat-head Screwdriver to turn Camlock clockwise so it locks onto the head of the Cam-bolt. Turn until it is snug (about 3/4ths of a turn) -- over-tightening could damage Cam-lock or/and Cam-bolt.

STEP 1

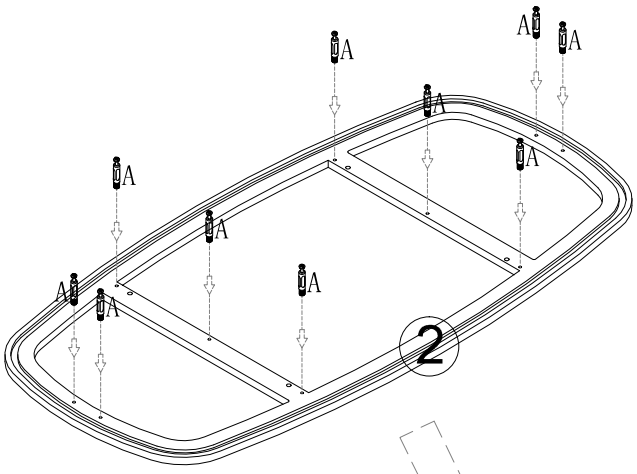

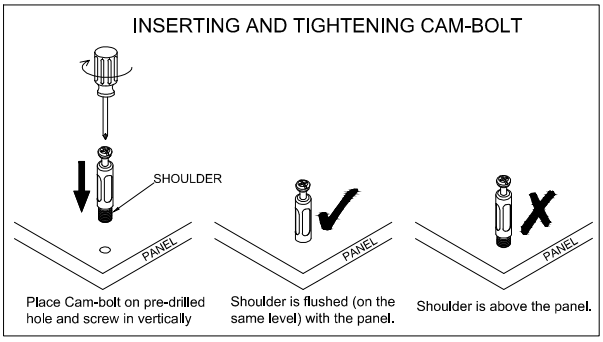

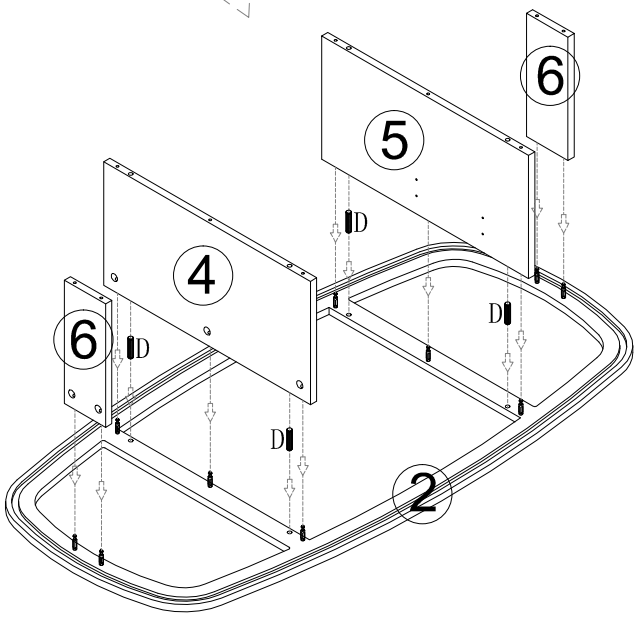

Align the arrow on the Cam-lock to the Cam-bolt head and insert the Cam-lock. Ensure Cam-lock is fully inserted.

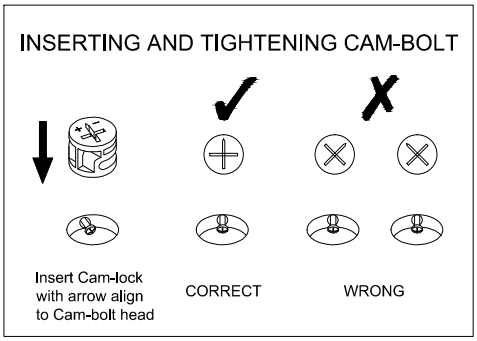

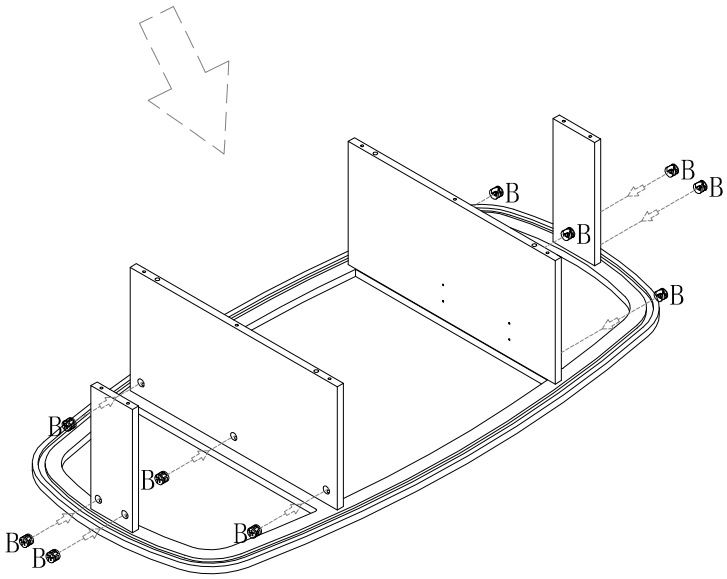

	A×10PCS
	B×10PCS
	D×4PCS

STEP 2

When installing the three peripheral boards, you can put them in the slots one by one, but make sure to align the gaps between them properly during installation - otherwise, it will prevent further installation

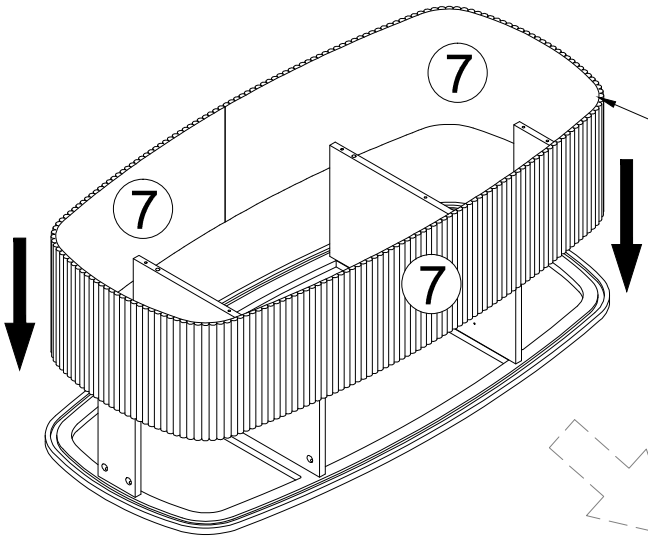

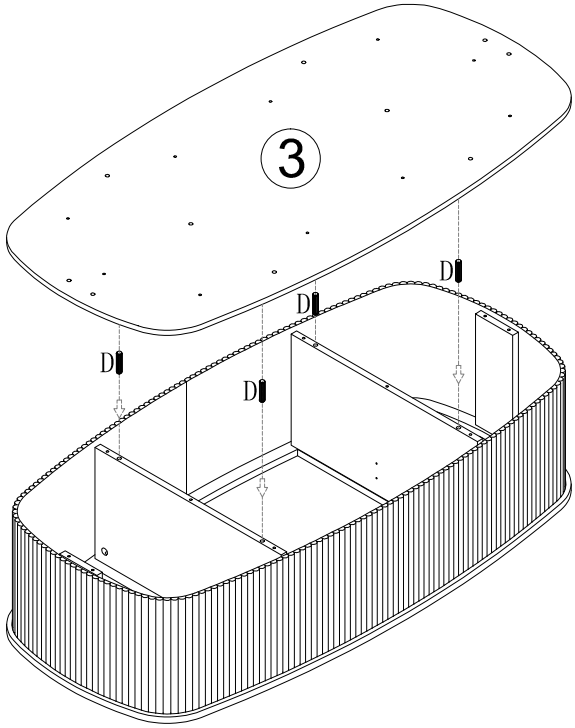

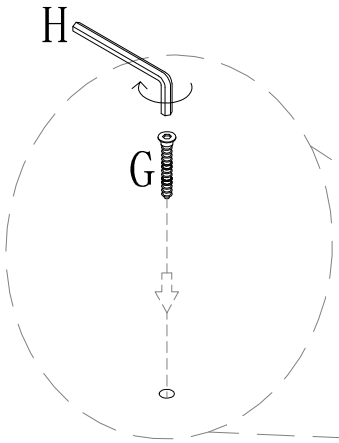

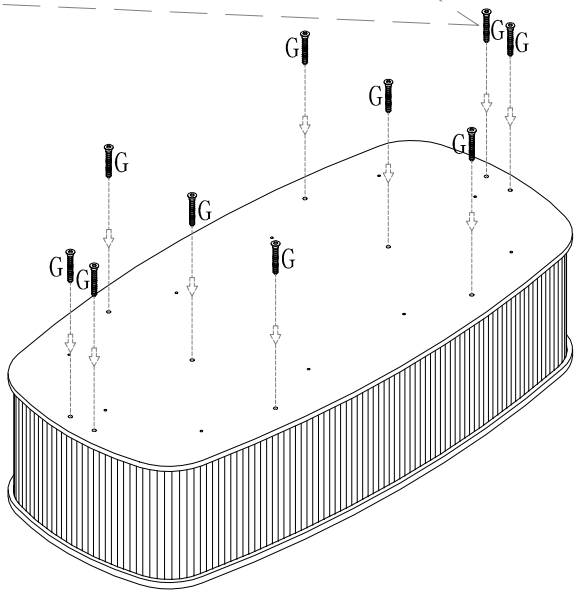

	D×4PCS
	G×10PCS
	H×1PC

STEP 3

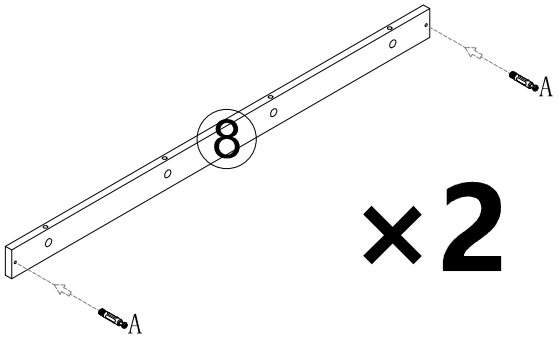

×2

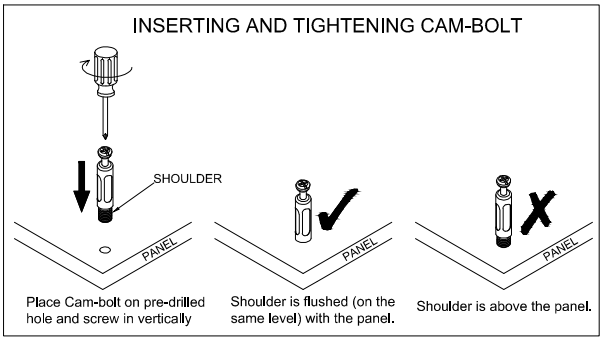

When installing, make sure the guide hole is facing up.

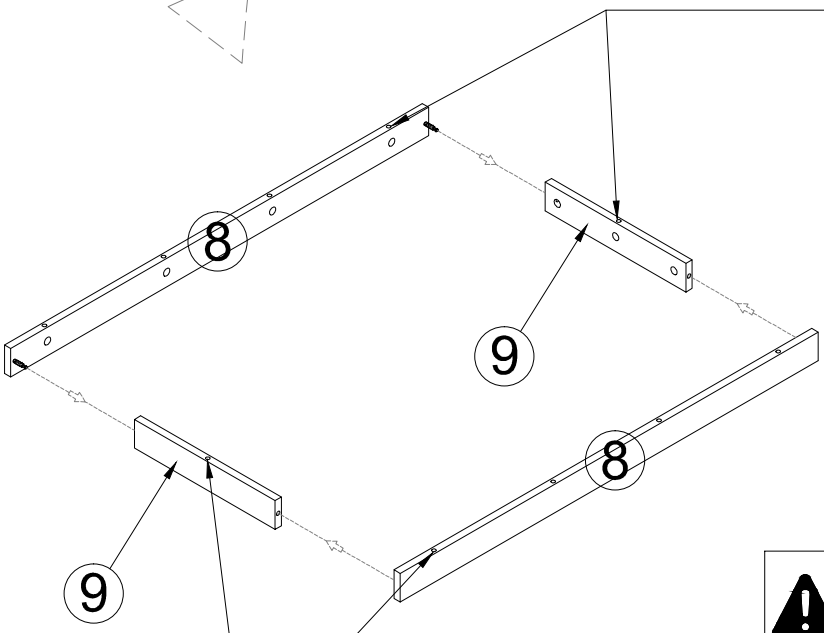

When installing, make sure the guide hole is facing up.

Align the arrow on the Cam-lock to the Cam-bolt head and insert the Cam-lock. Ensure Cam-lock is fully inserted.

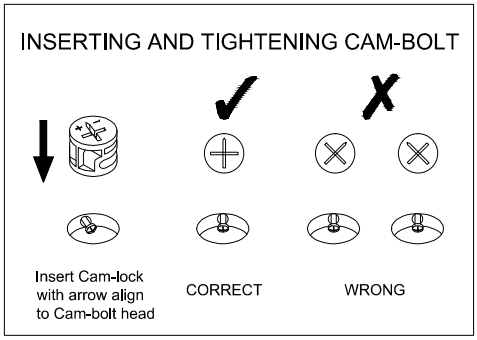

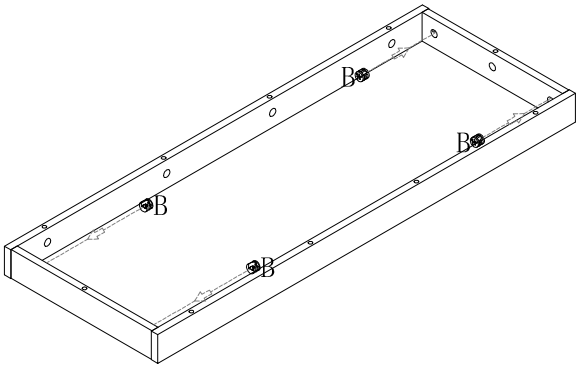

	A×4PCS
	B×4PCS

STEP 4

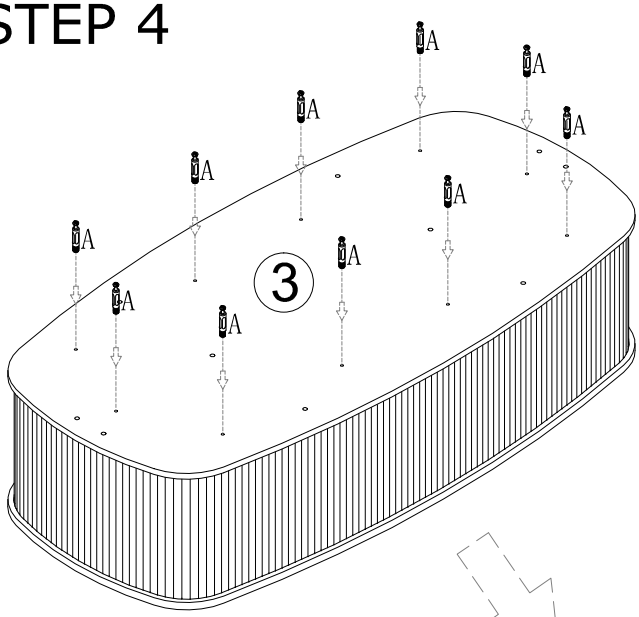

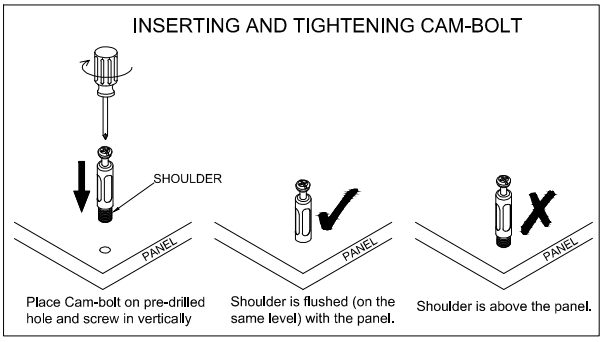

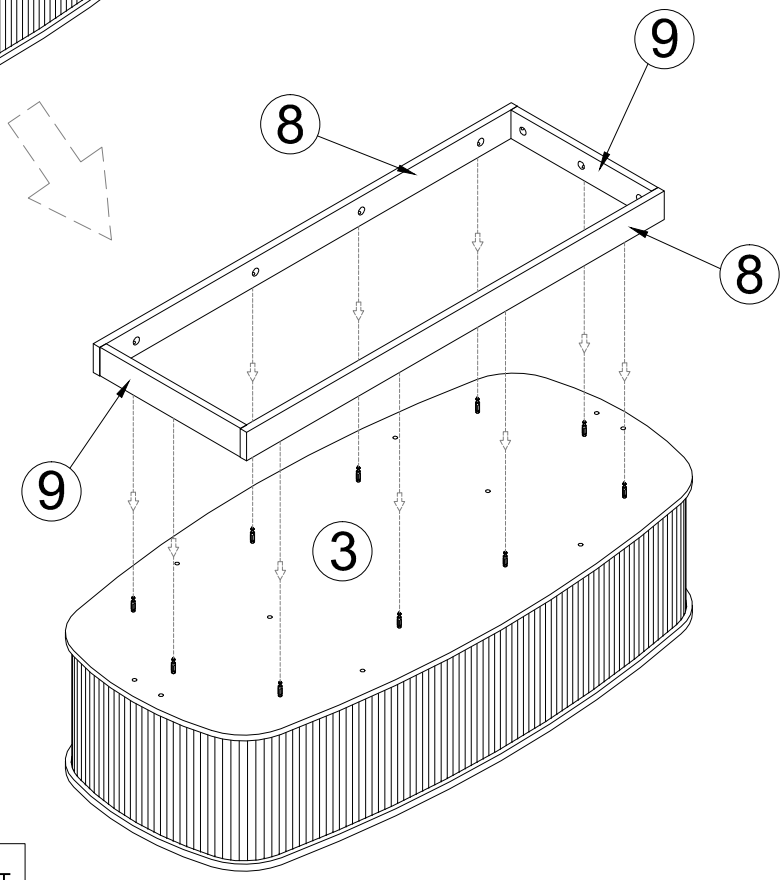

Align the arrow on the Cam-lock to the Cam-bolt head and insert the Cam-lock. Ensure Cam-lock is fully inserted.

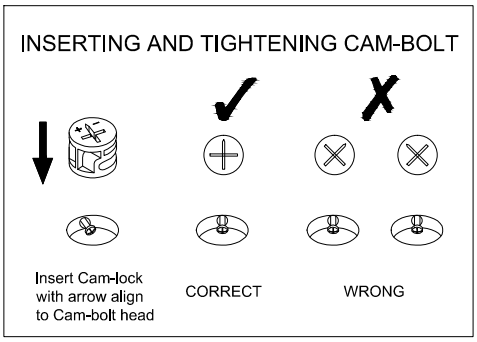

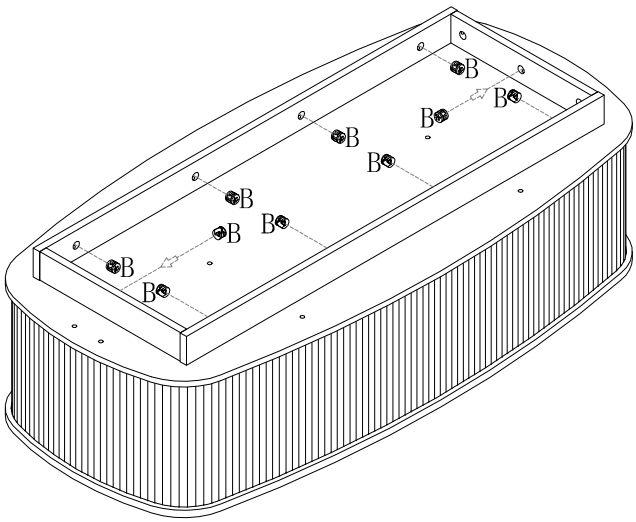

	A×10PCS
	B×10PCS

STEP 5

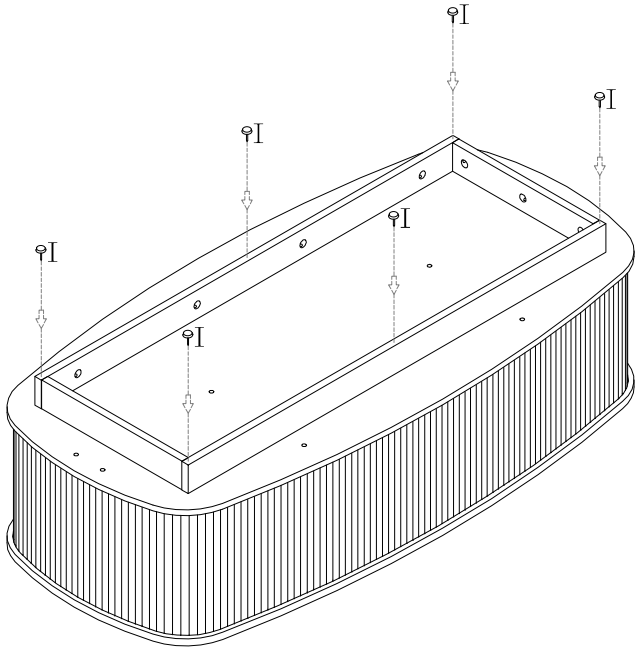

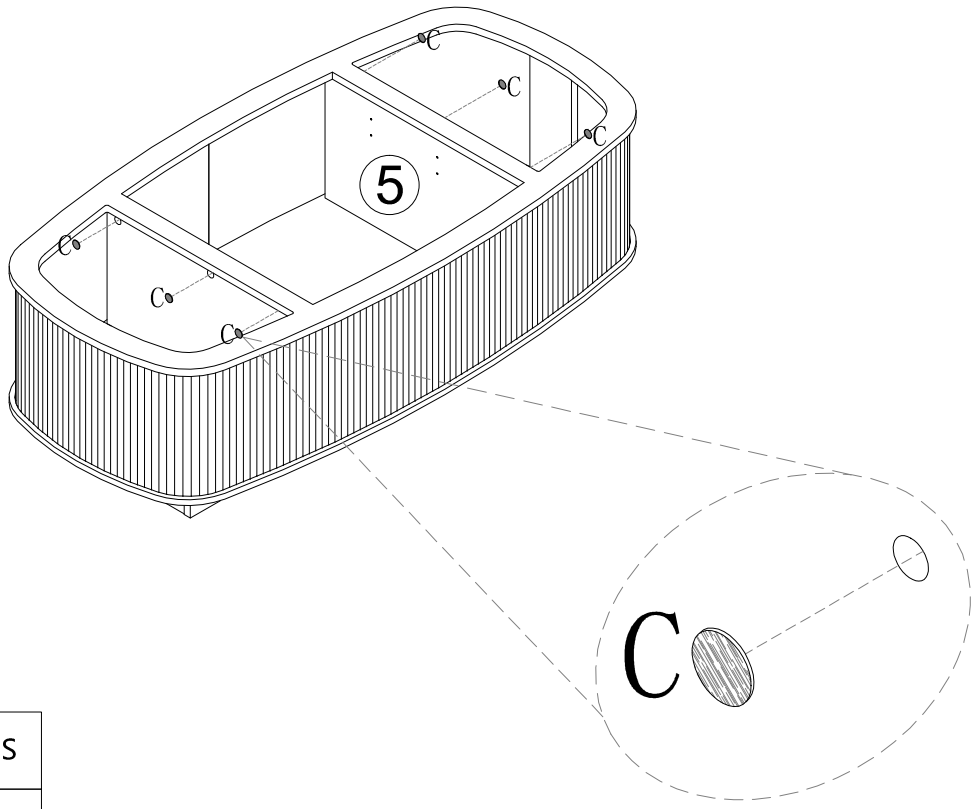

	C×6PCS
	I×6PCS

STEP 6

Note: First align the front guide hole, then tighten the screw, and then align the rear guide hole and tighten the screw.

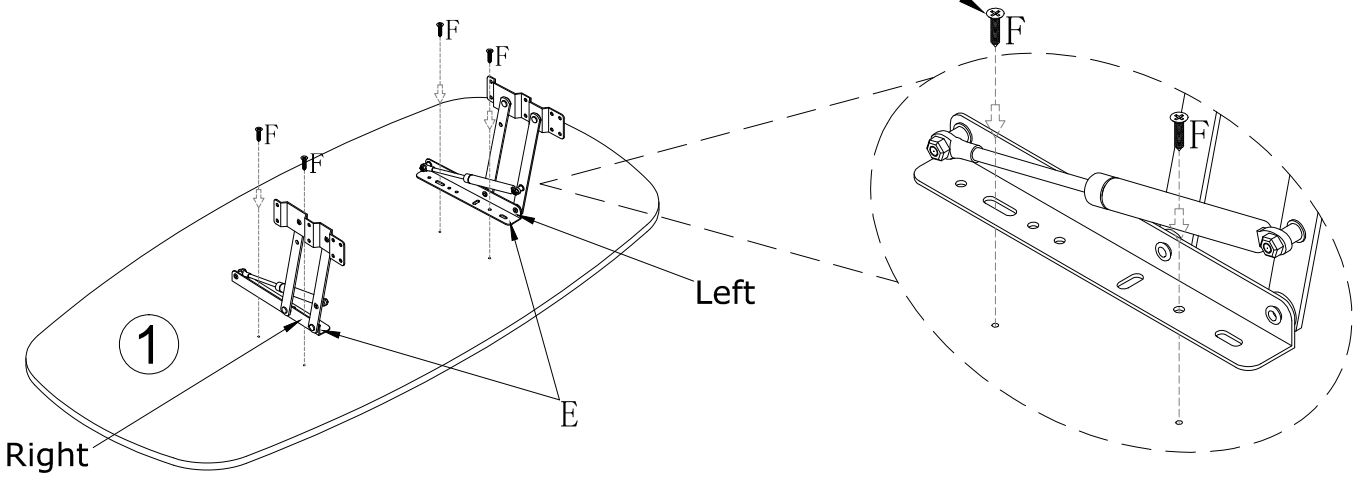

Note: Use screws to reinforce the lifting rod, there are no pilot holes here, the screws can be tightened directly.

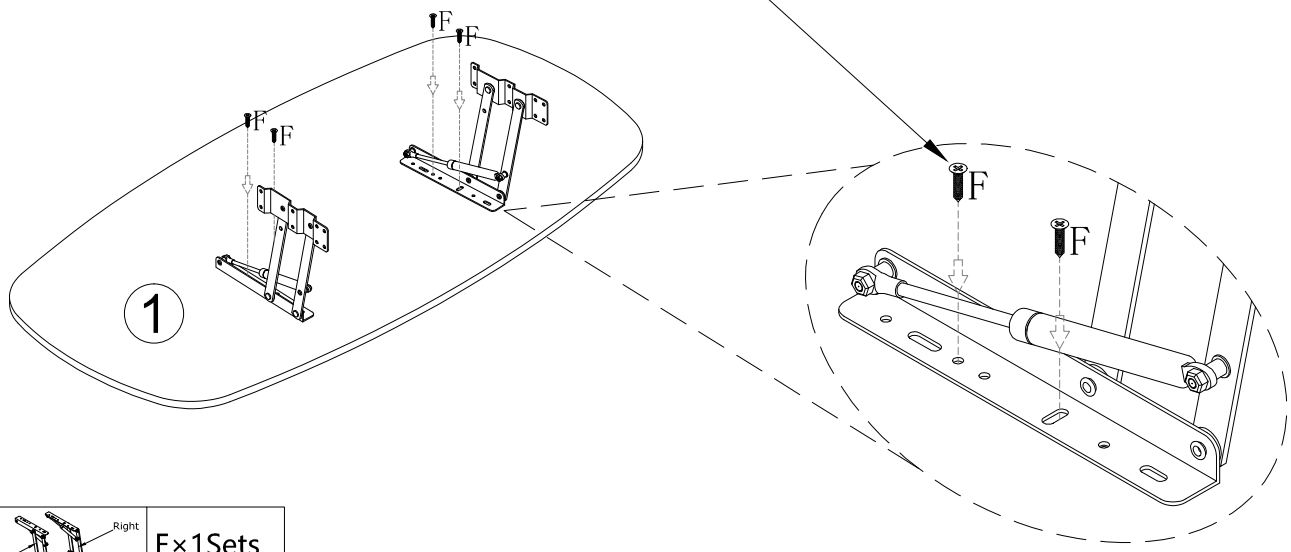

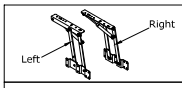	E×1Sets
	F×8PCS

STEP 7

Note: It takes two people to work when installing the No. 2 board, and someone needs to lift the other side to keep it balanced when installing one side.

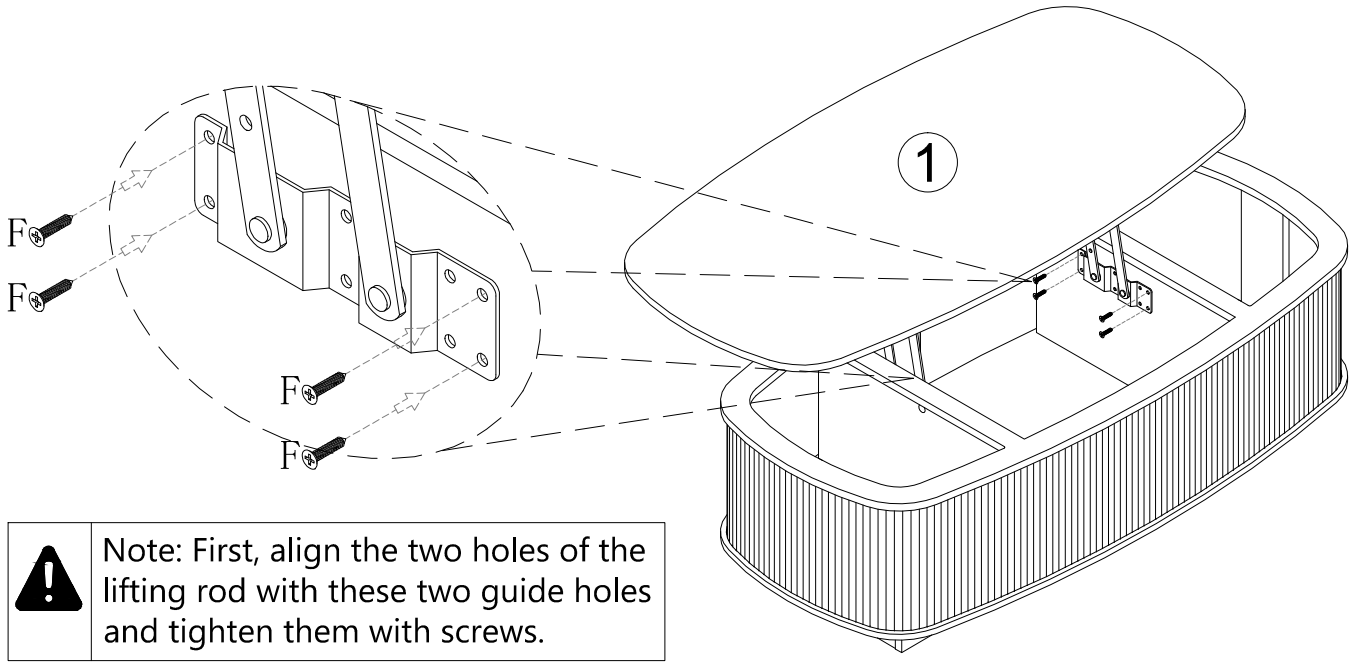

Note: First, align the two holes of the lifting rod with these two guide holes and tighten them with screws.

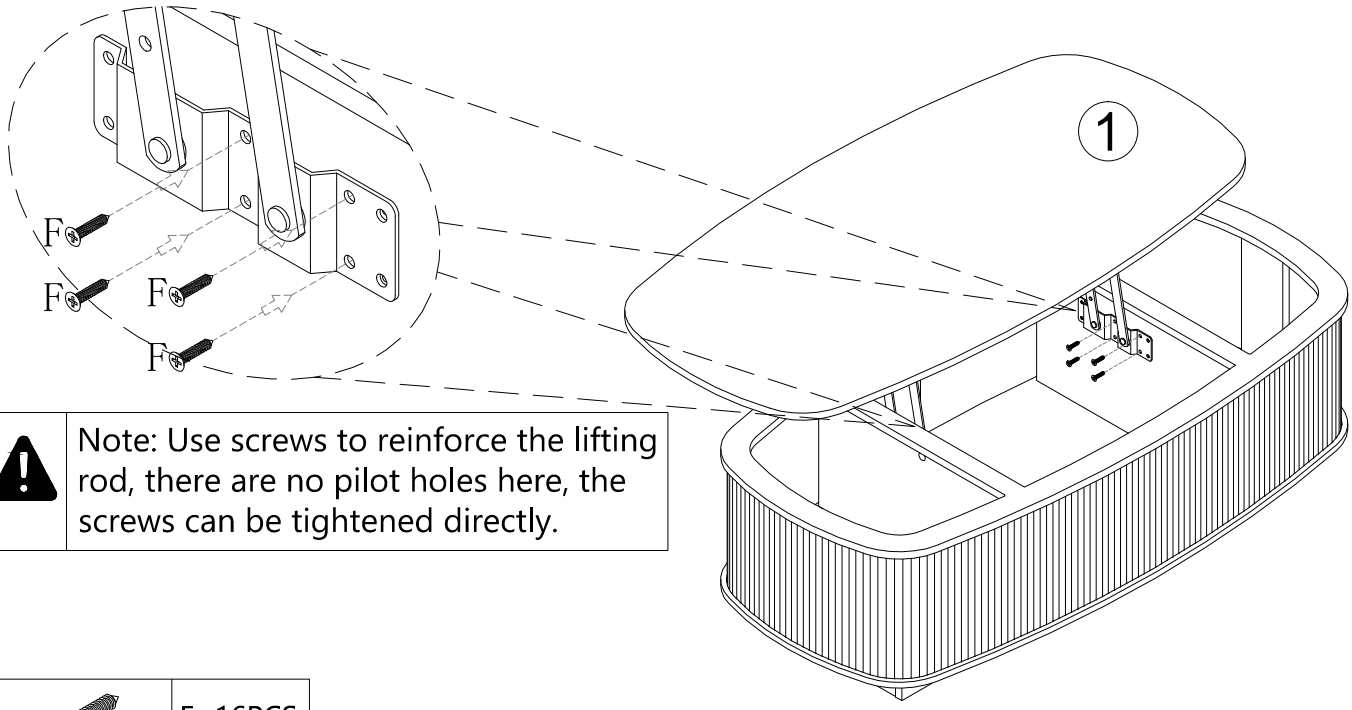

Note: Use screws to reinforce the lifting rod, there are no pilot holes here, the screws can be tightened directly.

	F×16PCS