V-WD23-0158D

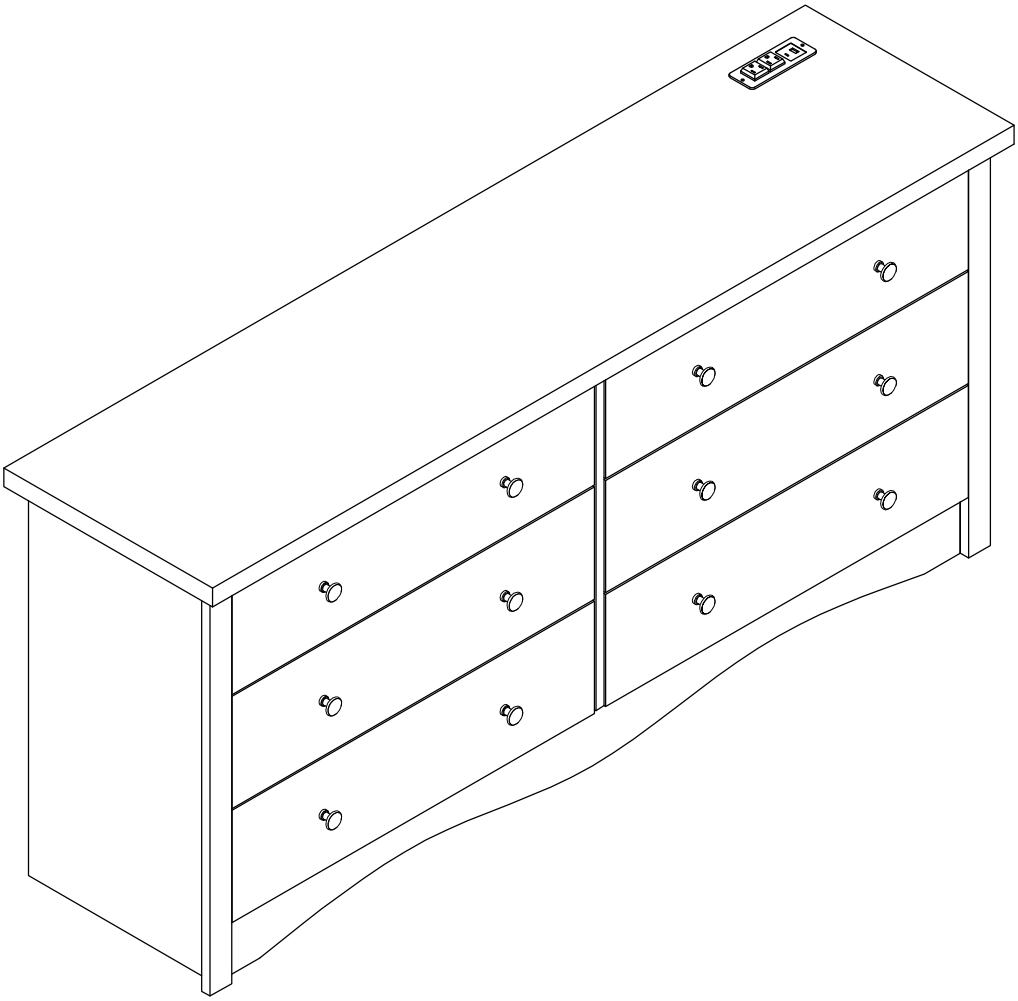

WARNING!

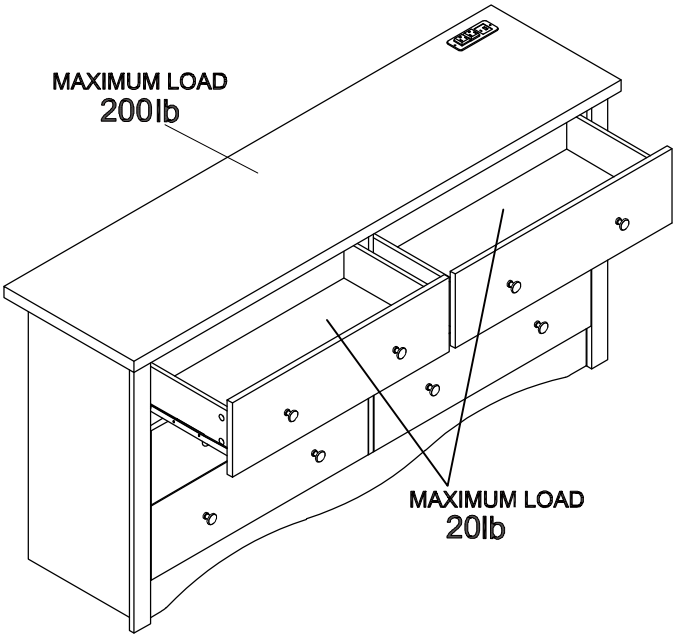

Estimated Time for Assembly

60 mins

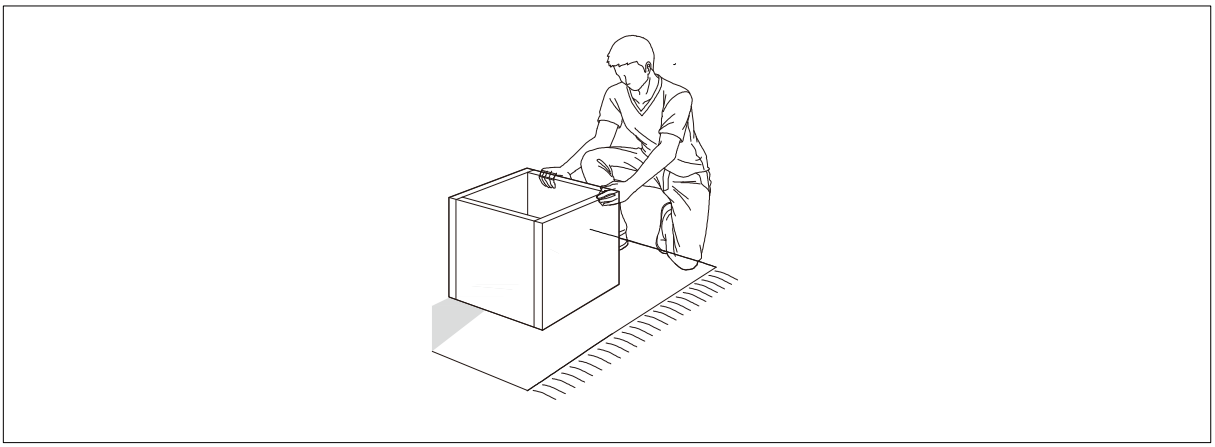

Assembly the furniture on empty carton, carpet, or rug to prevent scratches or damage.

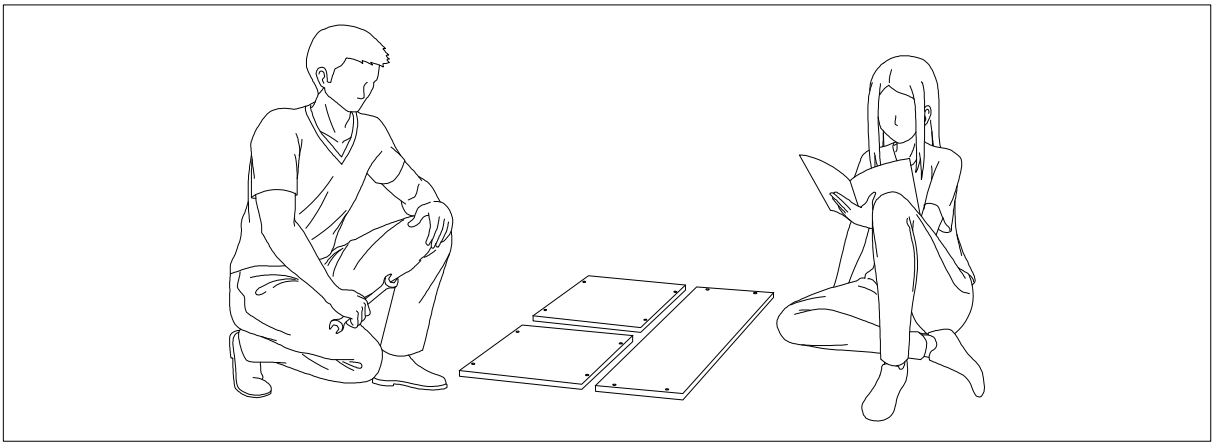

This furniture requires 2 people to assembly.

Make sure no parts are missing or damaged before assembly.

Board identification

Not actual size

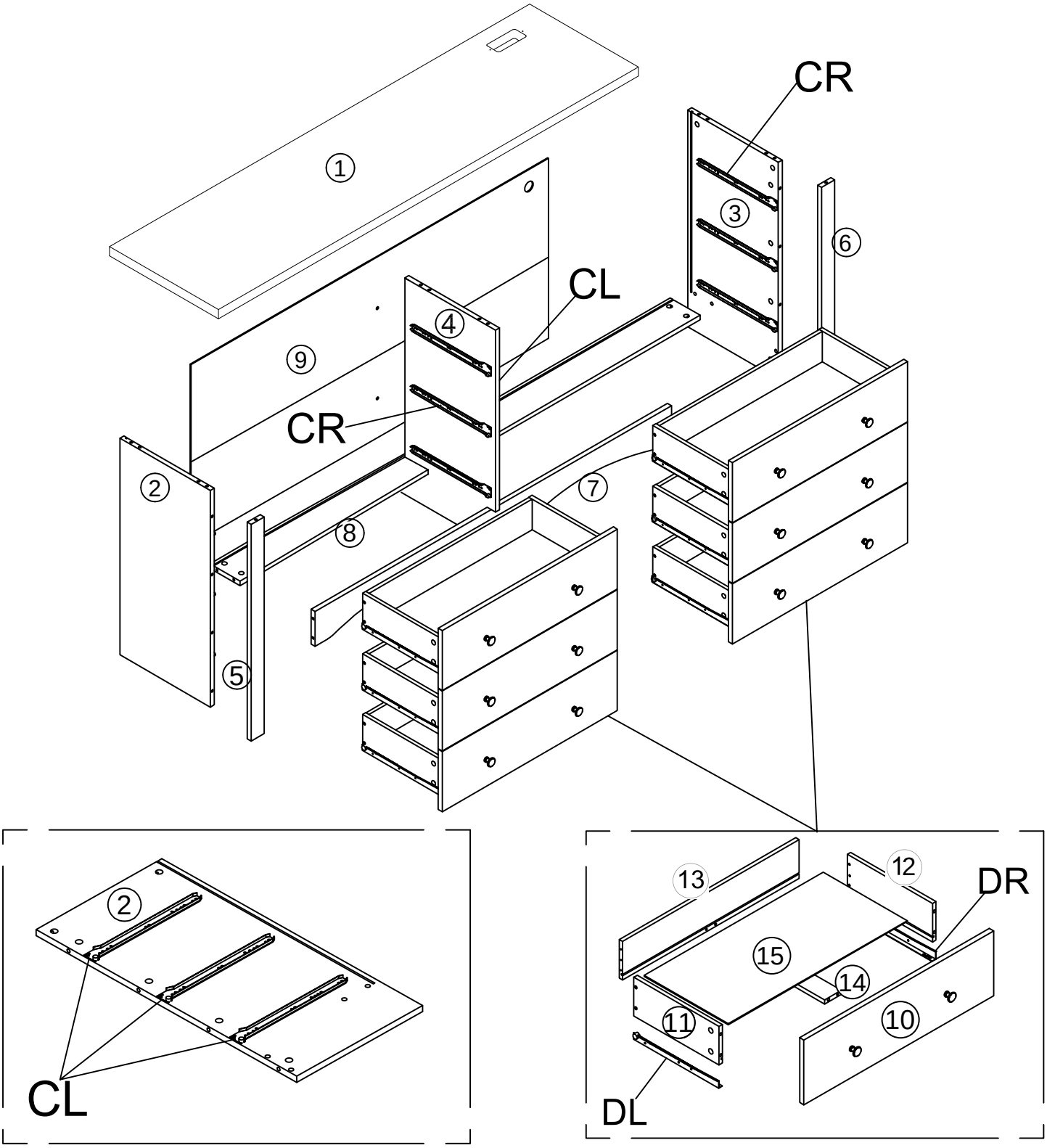

Board identification

Not actual size

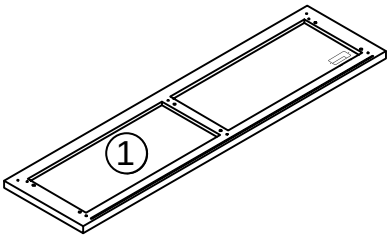

face board x1

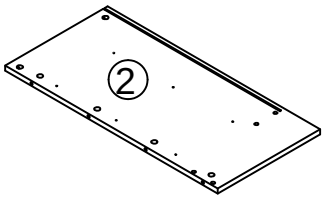

left side board x1

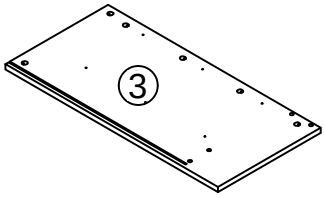

right side board x1

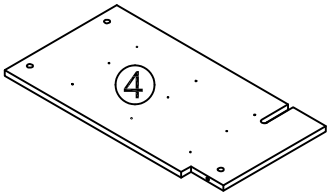

middle side board x1

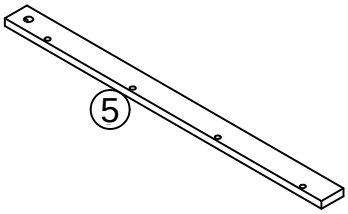

left decorative strip x1

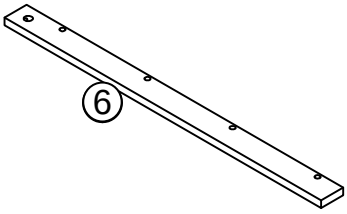

right decorative strip x1

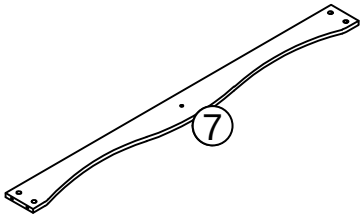

Bottom baffle board x1

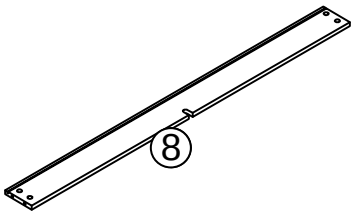

Bottom brace board x1

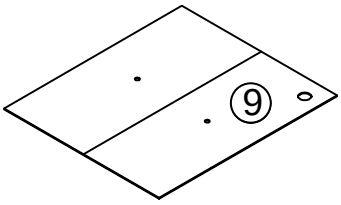

Back board x1

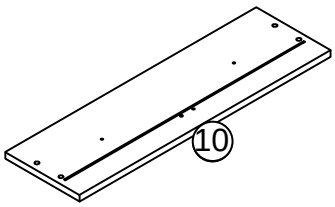

Drawer face board x6

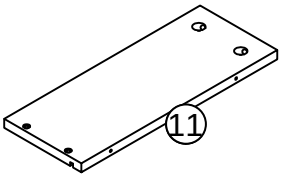

Drawer left board x6

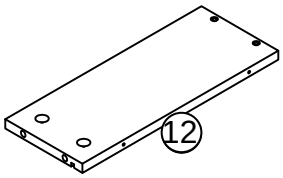

Drawer right board x6

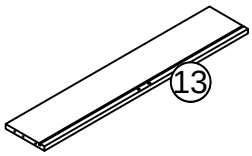

Drawer back board x6

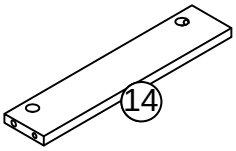

Drawer baffle board x6

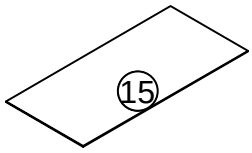

Drawer bottom board x6

Hardware list

15x9.5mm

A	× 61+1

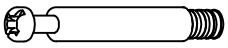

B	× 61+1

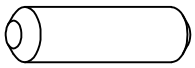

8x30mm

C	× 30+1

4x18mm

D	×2

3x15mm

E	×6+1

4x20mm

F	×12+1

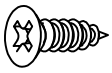

3.5x12mm

G	×60+1

4x25mm

H	× 24+1

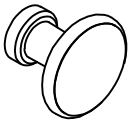

I	×12

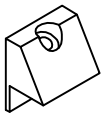

J	×4

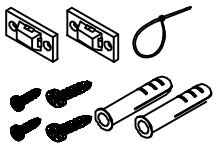

K	×2

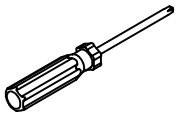

L	×1

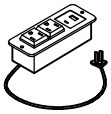

M	× 1

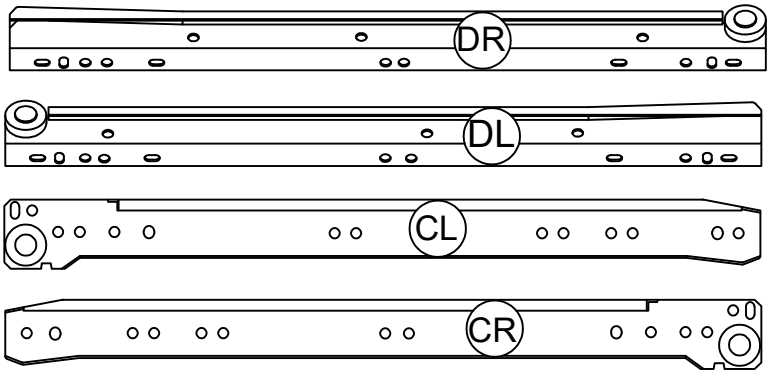

Nx6

STEP 1

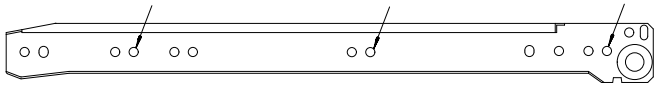

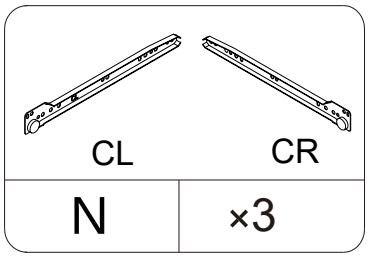

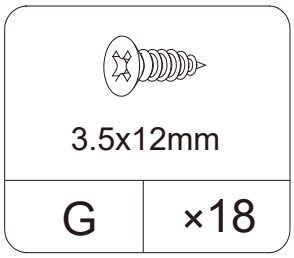

Assemble the screw into the hole mark with arows

The slide rail has a rear positioning button. During assembly,insert the button into the hole and ensure the rail is flush with the board

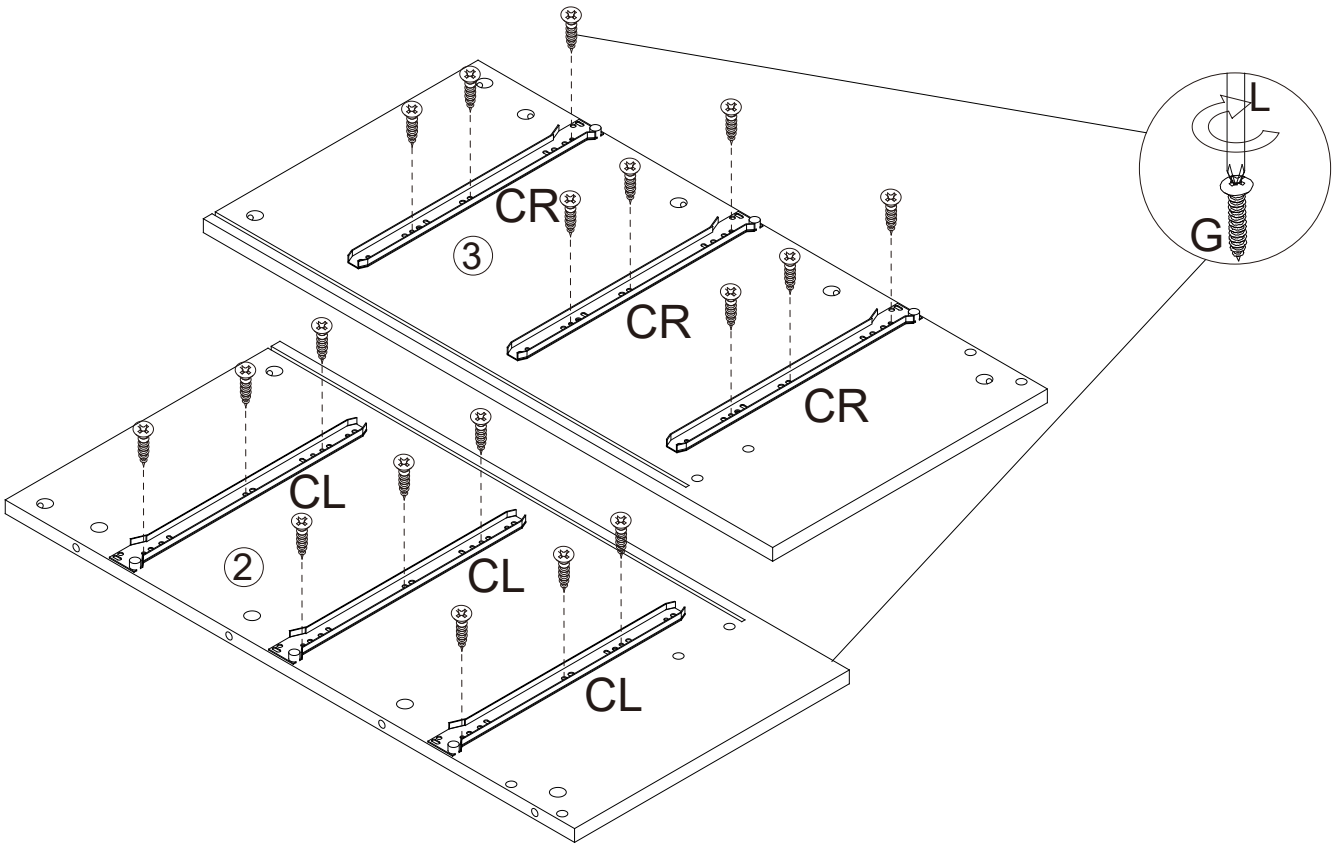

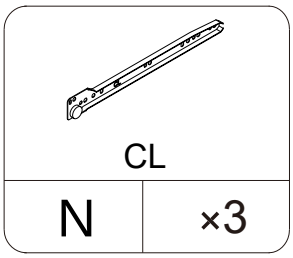

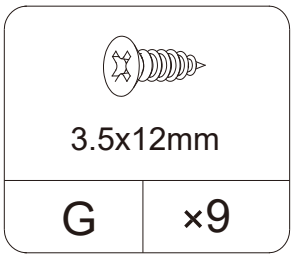

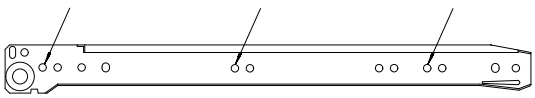

Assemble the screw into the hole mark with arows

The slide rail has a rear positioning button. During assembly,insert the button into the hole and ensure the rail is flush with the board

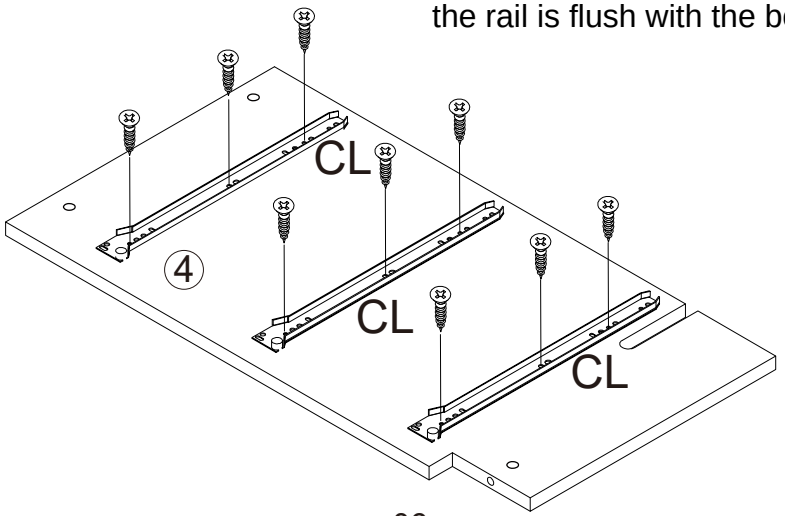

STEP 2

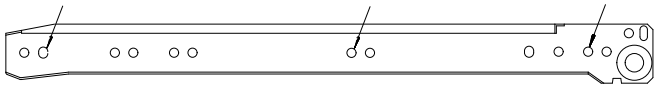

Assemble the screw into the hole mark with arows

Kindly note that the position of the screw hole on the rail has been changed

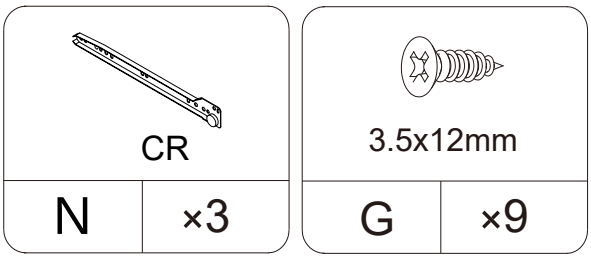

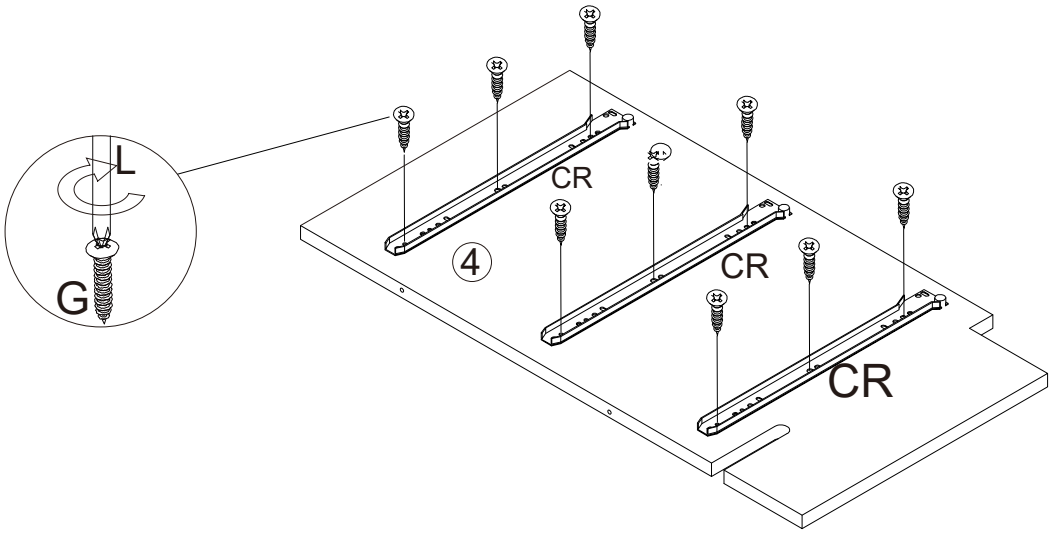

STEP 3

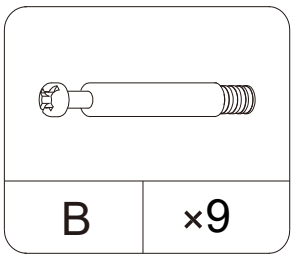

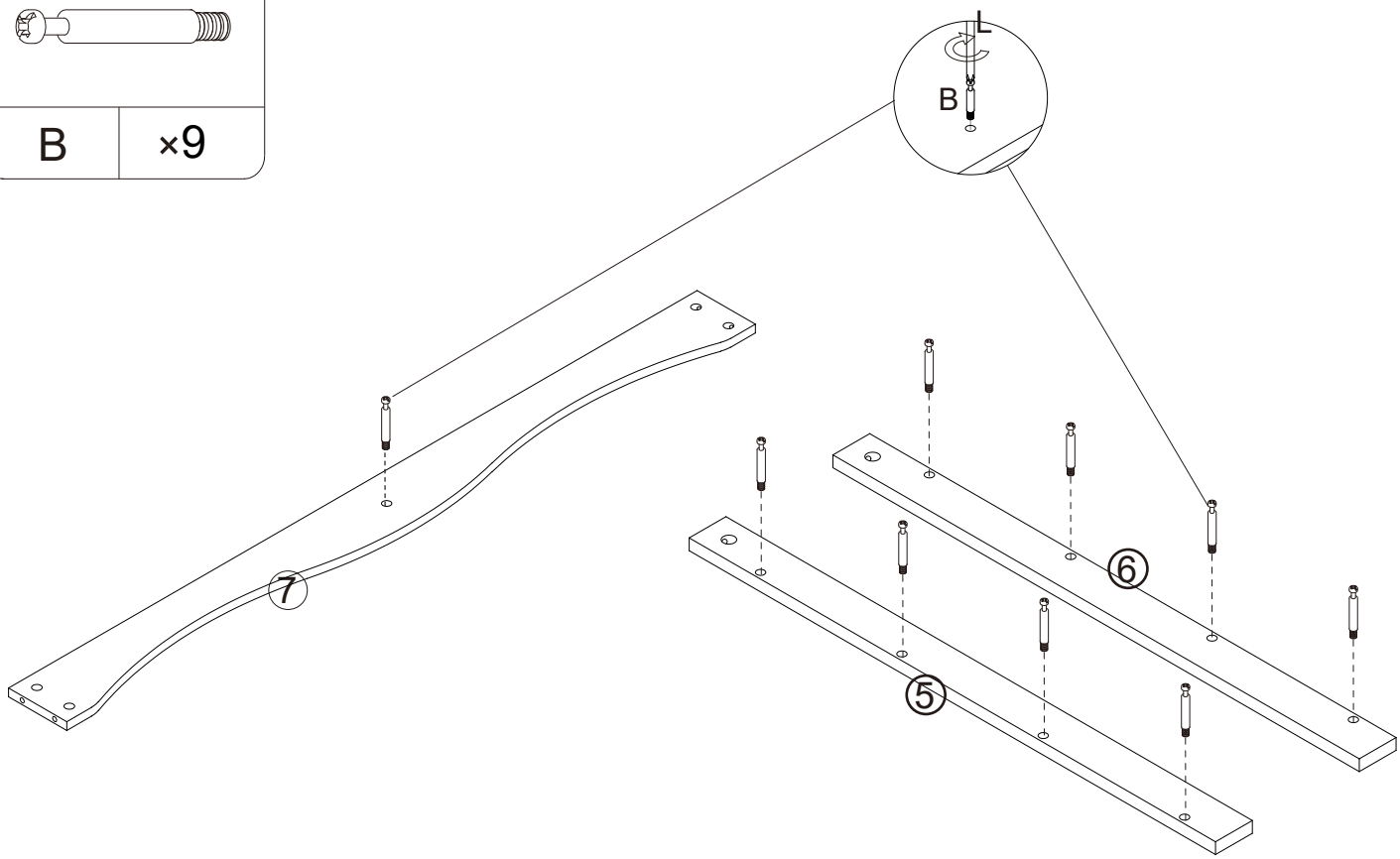

STEP 4

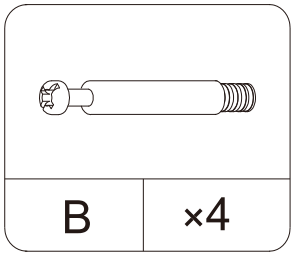

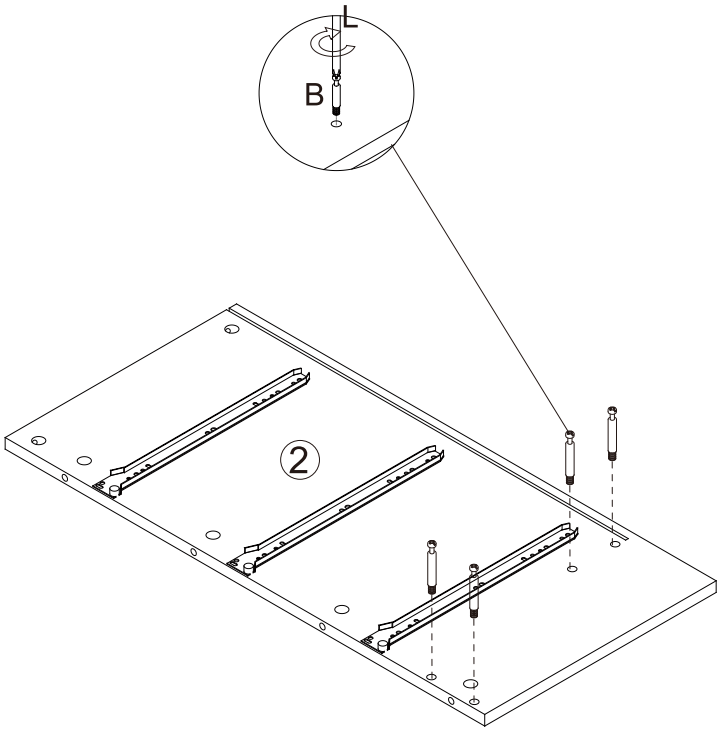

STEP 5

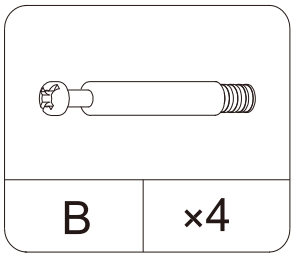

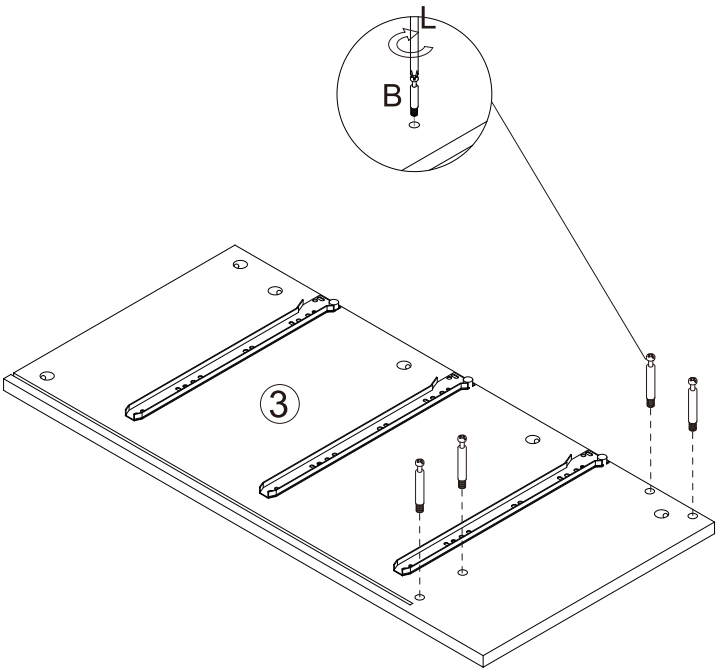

STEP 6

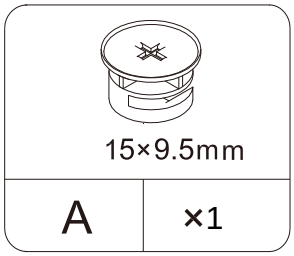
15×9.5mm
A
×1

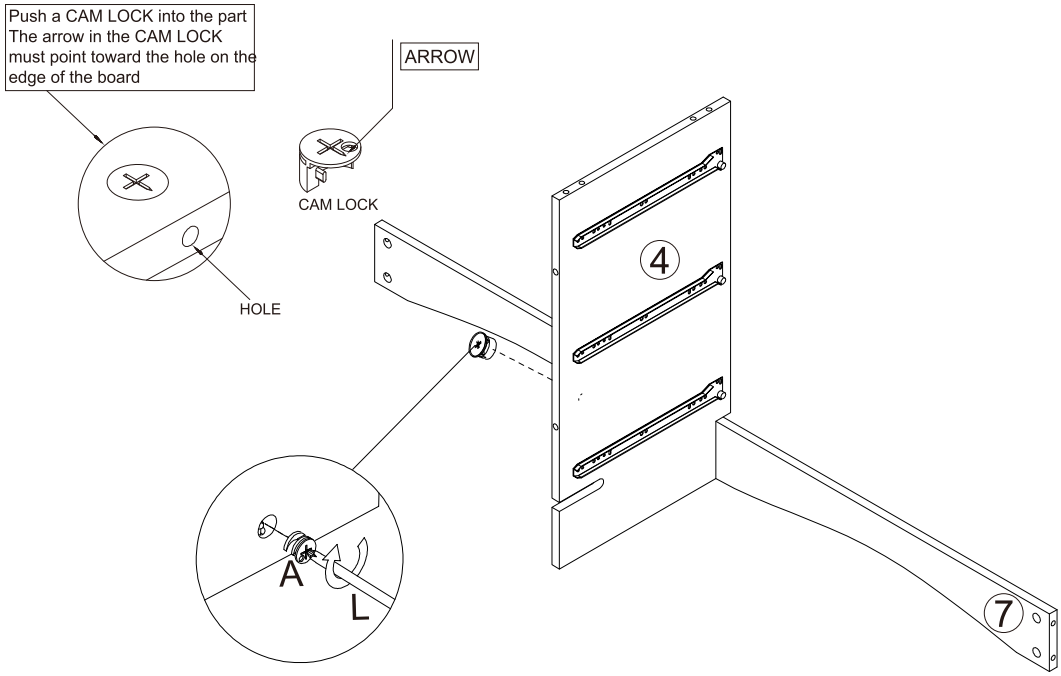
Push a CAM LOCK into the part
The arrow in the CAM LOCK
must point toward the hole on the
edge of the board
ARROW
CAM LOCK
HOLE
4
A
L
7

STEP 7

15×9.5mm
A
×8

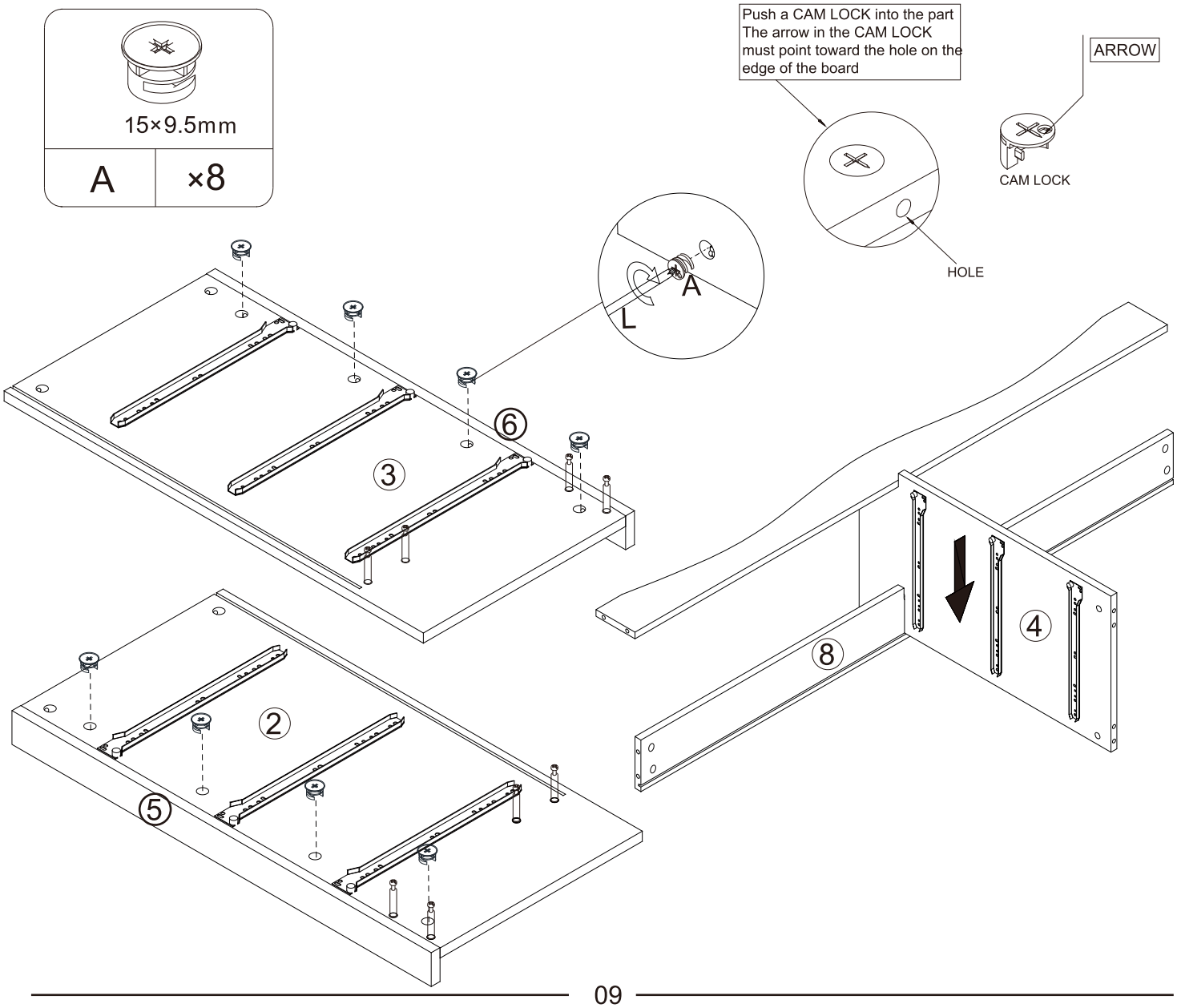
Push a CAM LOCK into the part
The arrow in the CAM LOCK
must point toward the hole on the
edge of the board
ARROW
CAM LOCK
HOLE
A
L
6
3
2
5
8
4

STEP 8

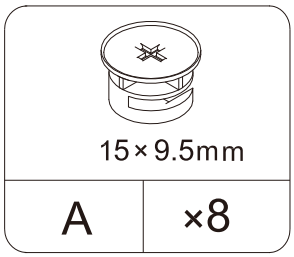
15×9.5mm
A
×8

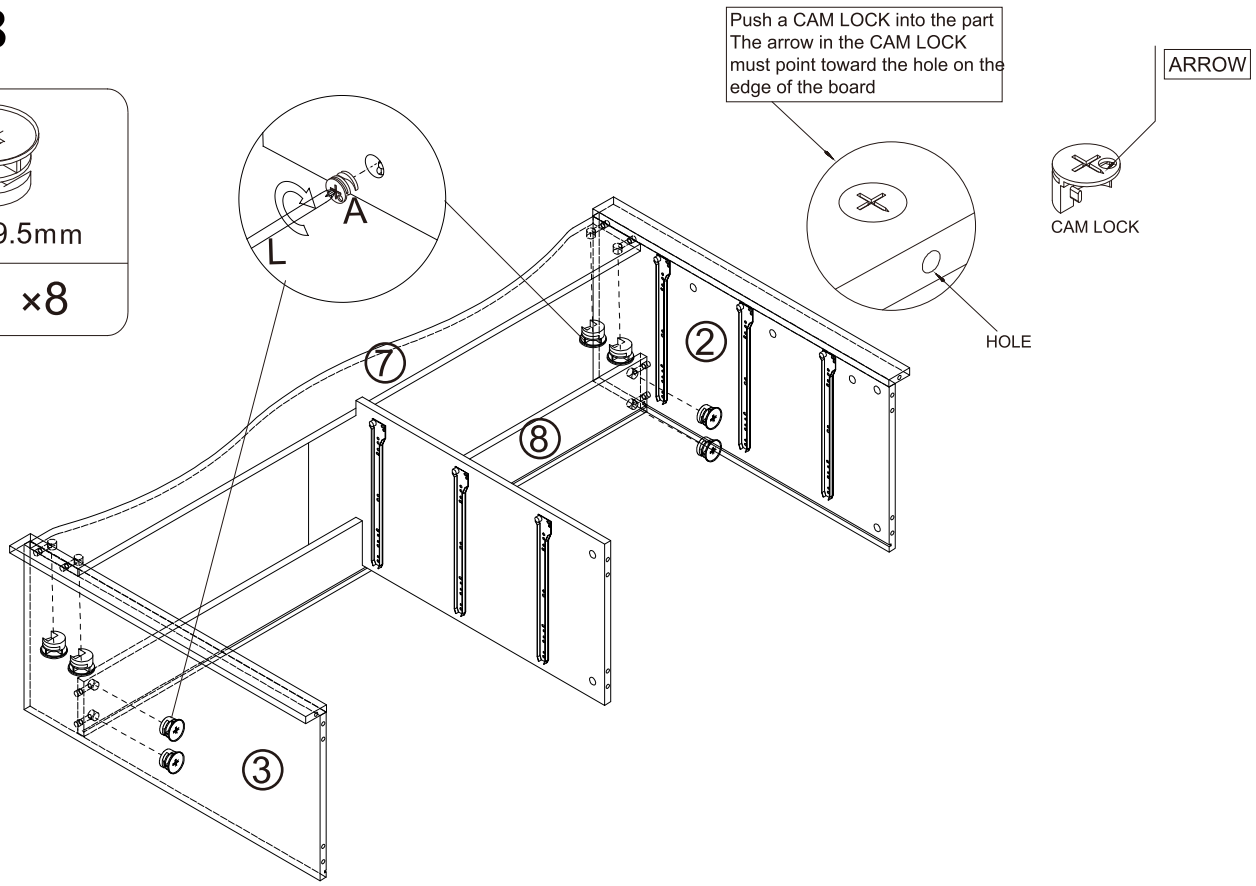
Push a CAM LOCK into the part
The arrow in the CAM LOCK
must point toward the hole on the
edge of the board
ARROW
CAM LOCK
HOLE
A
L
⑦
②
⑧
③

STEP 9

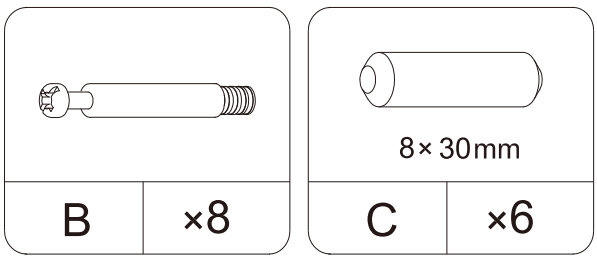
B
×8

8×30mm
C
×6

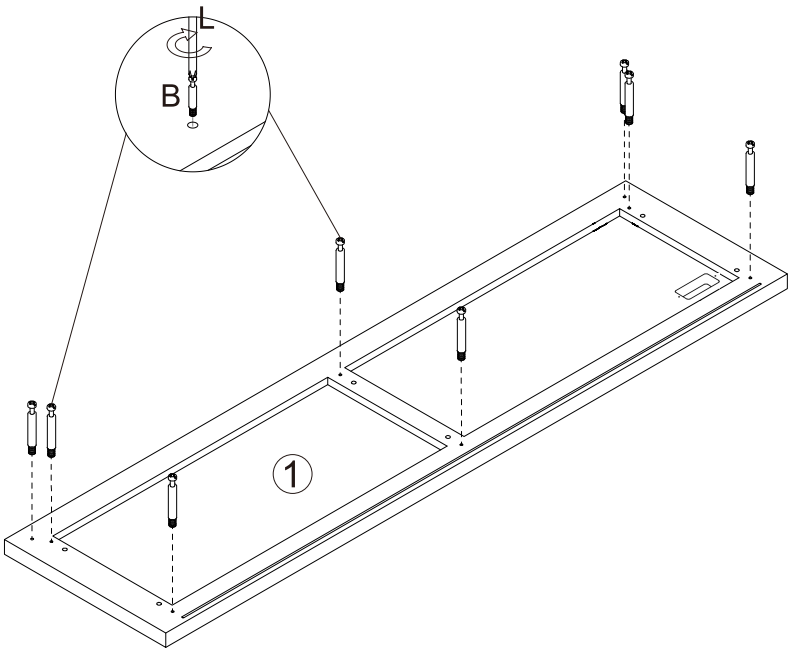
L
B
①

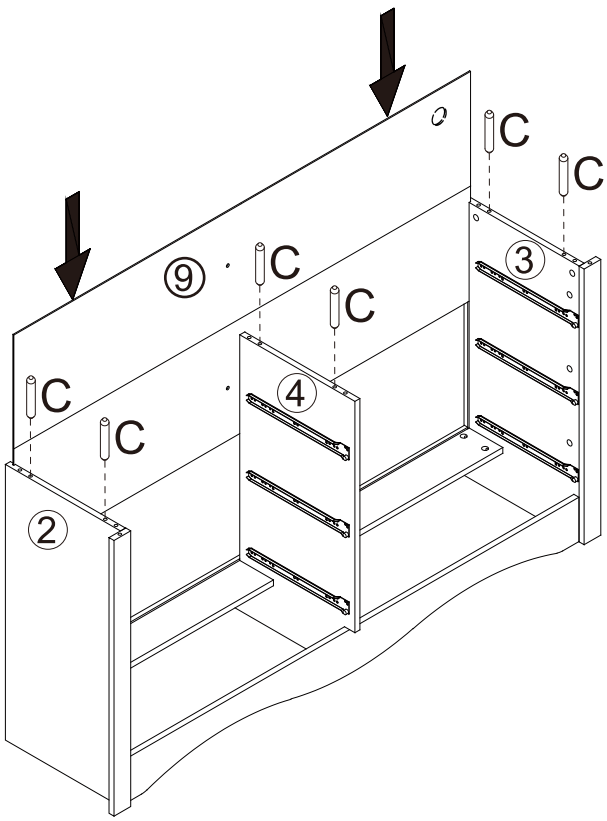
C
C
C
C
C
C
⑨
③
④
②

STEP 10

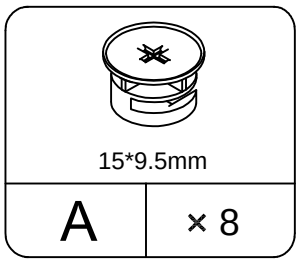

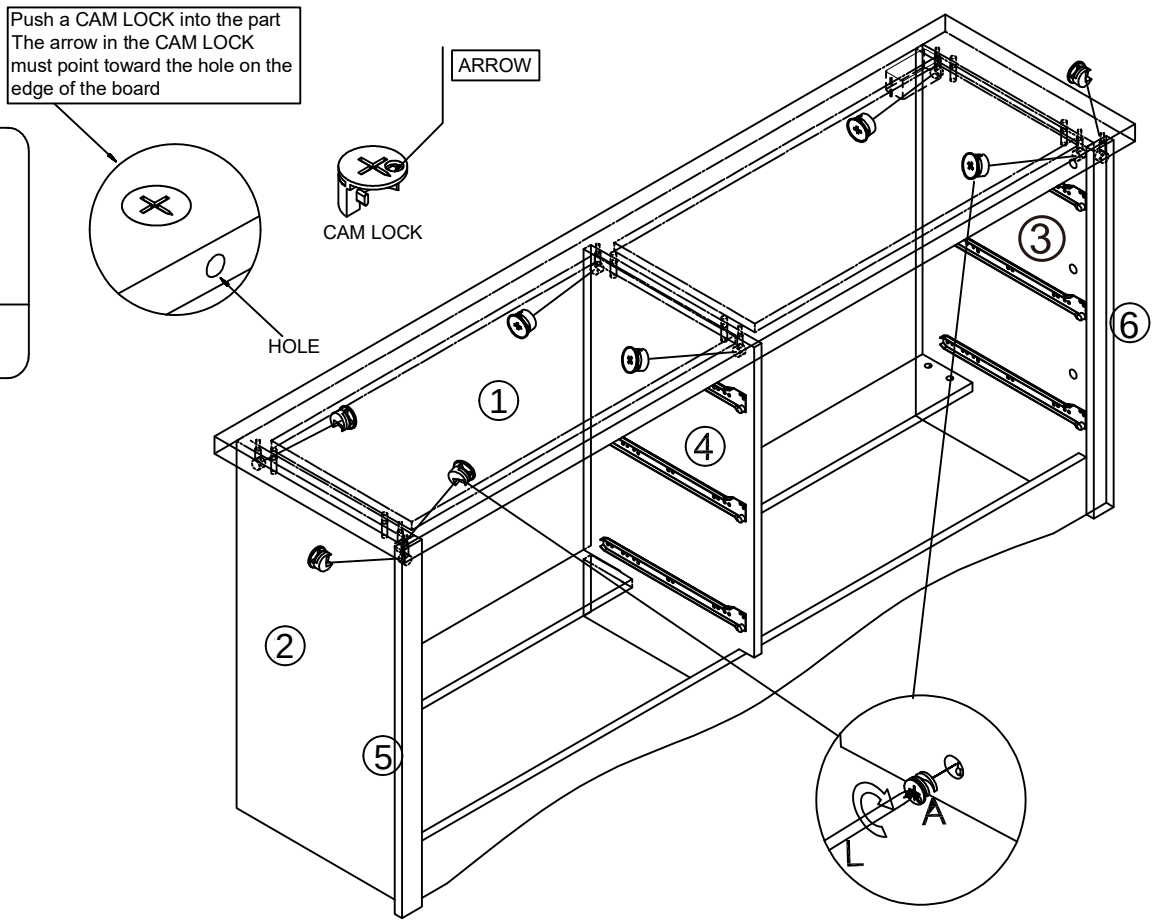

STEP 11

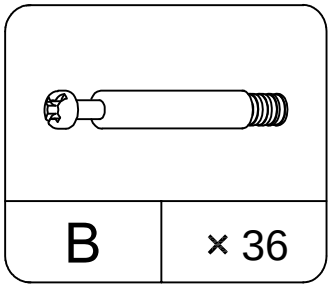

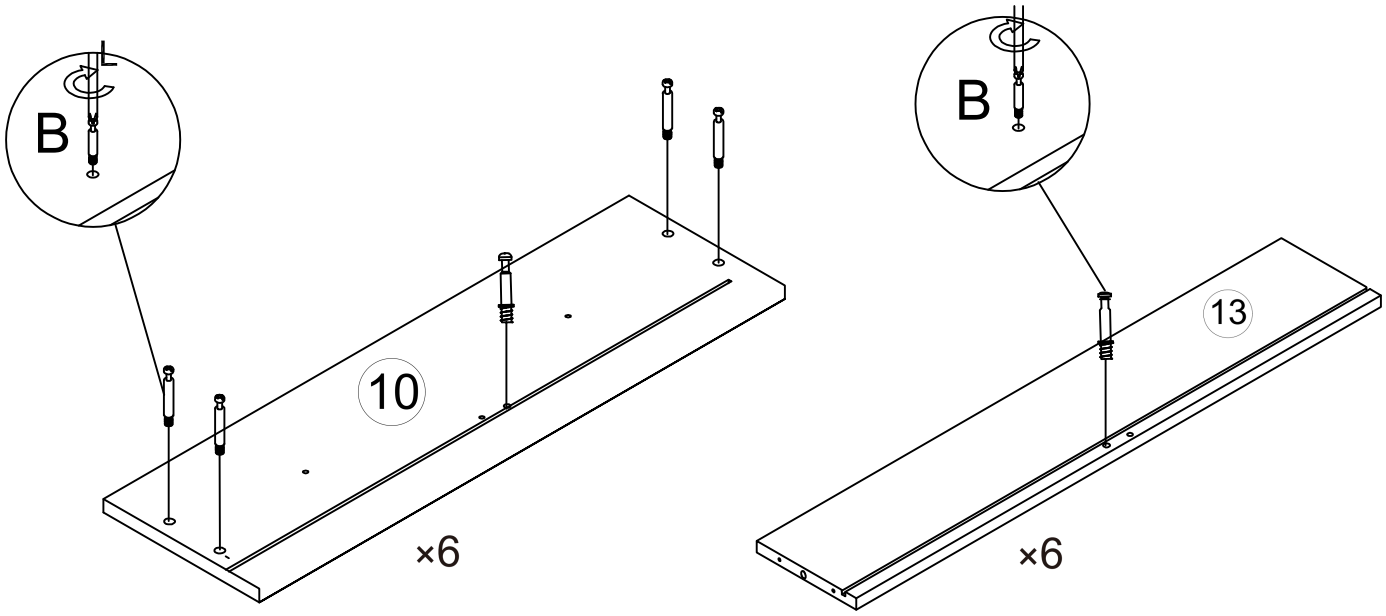

STEP 12

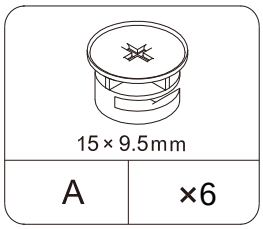

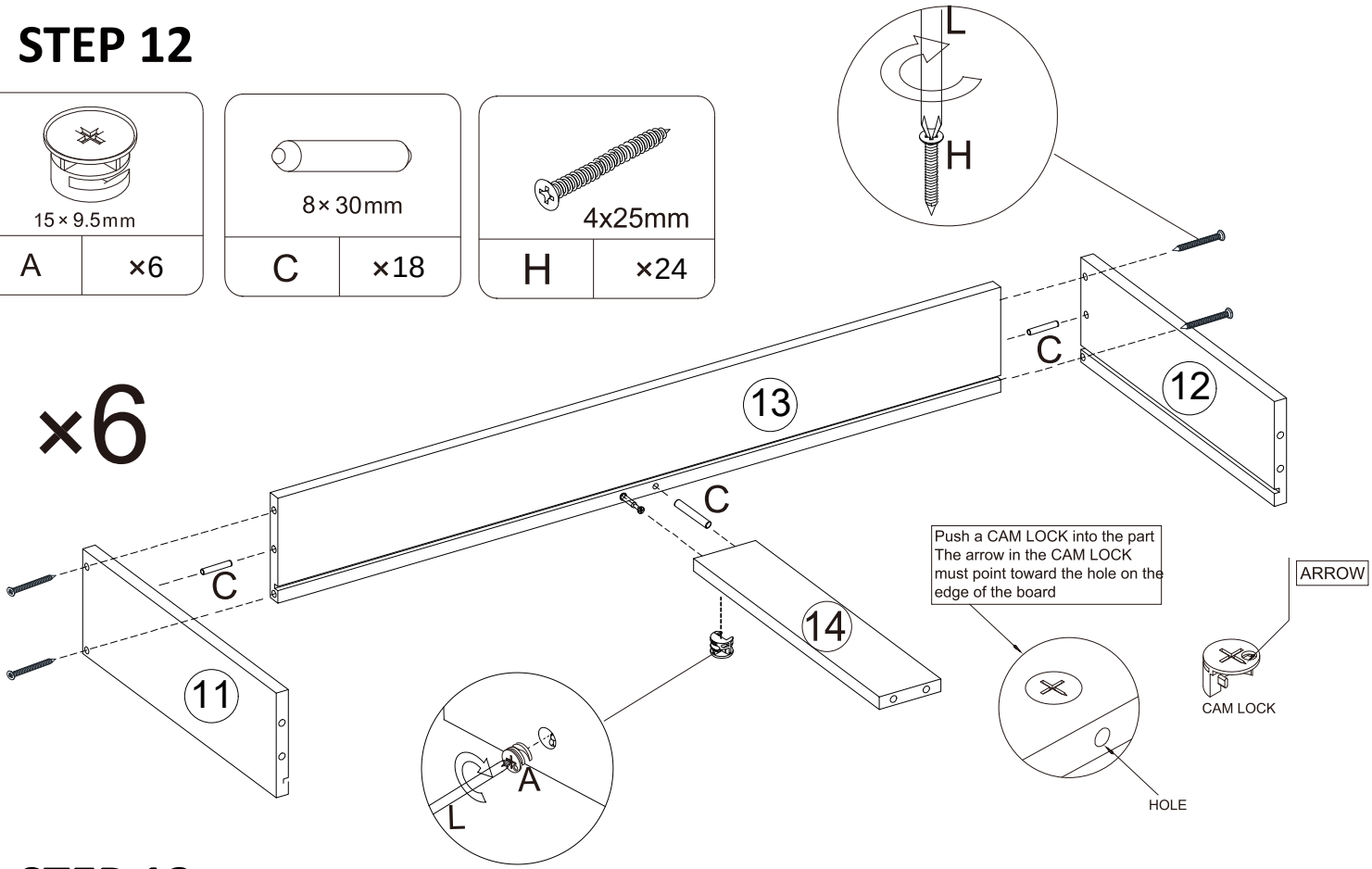

STEP 13

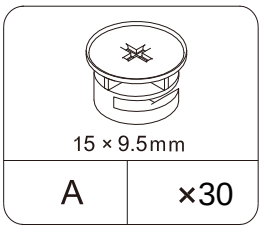

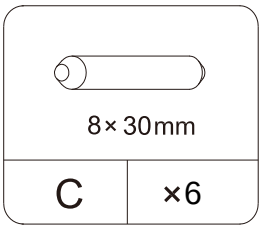

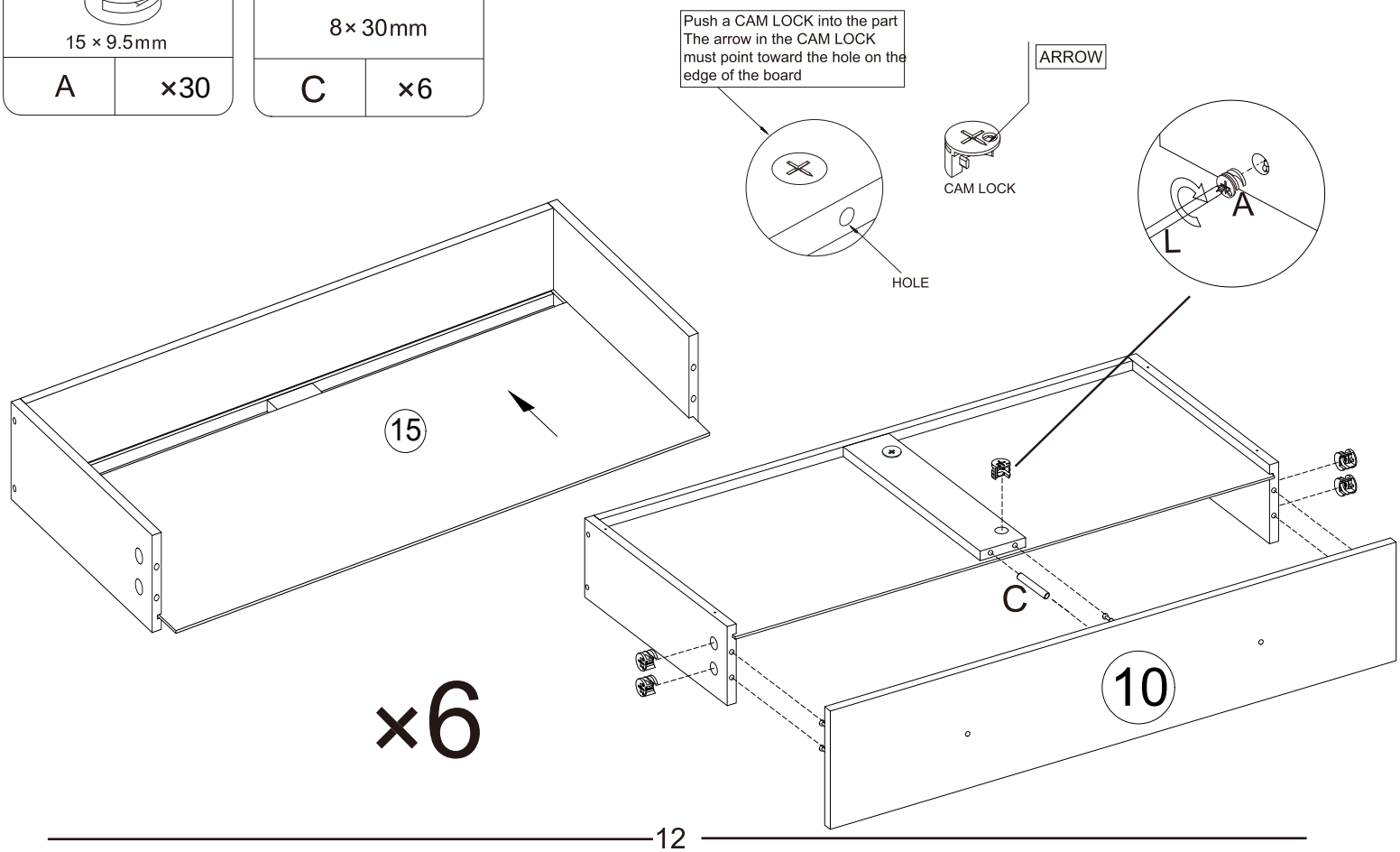

STEP 14

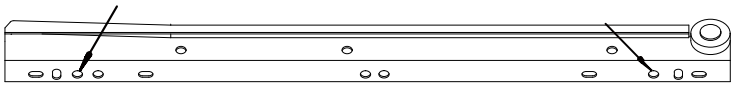

Assemble the screw into the hole
Mark with arrows

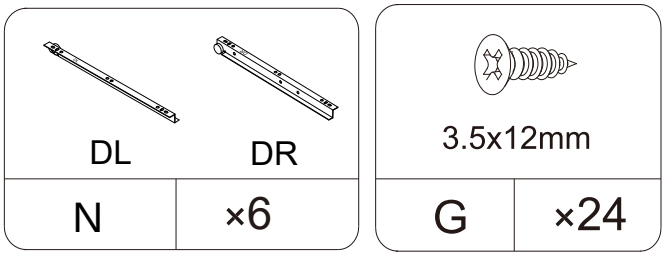

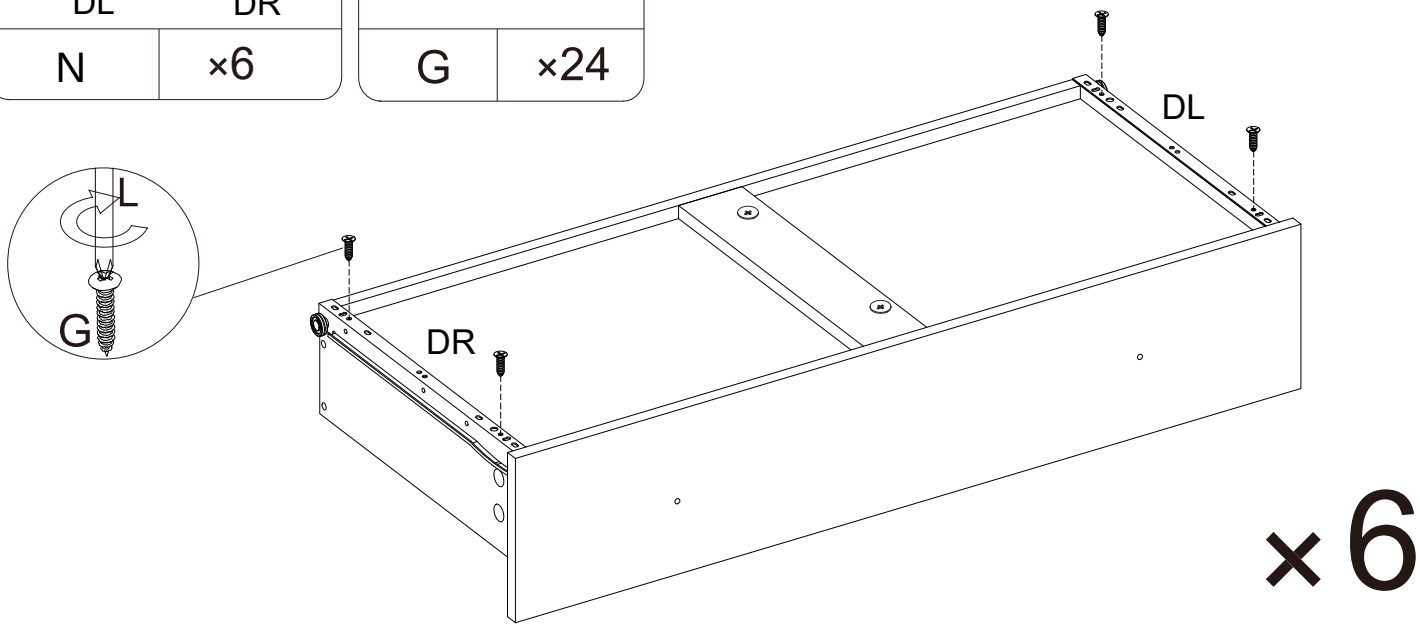

STEP 15

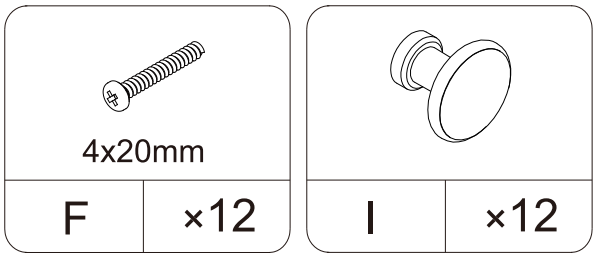

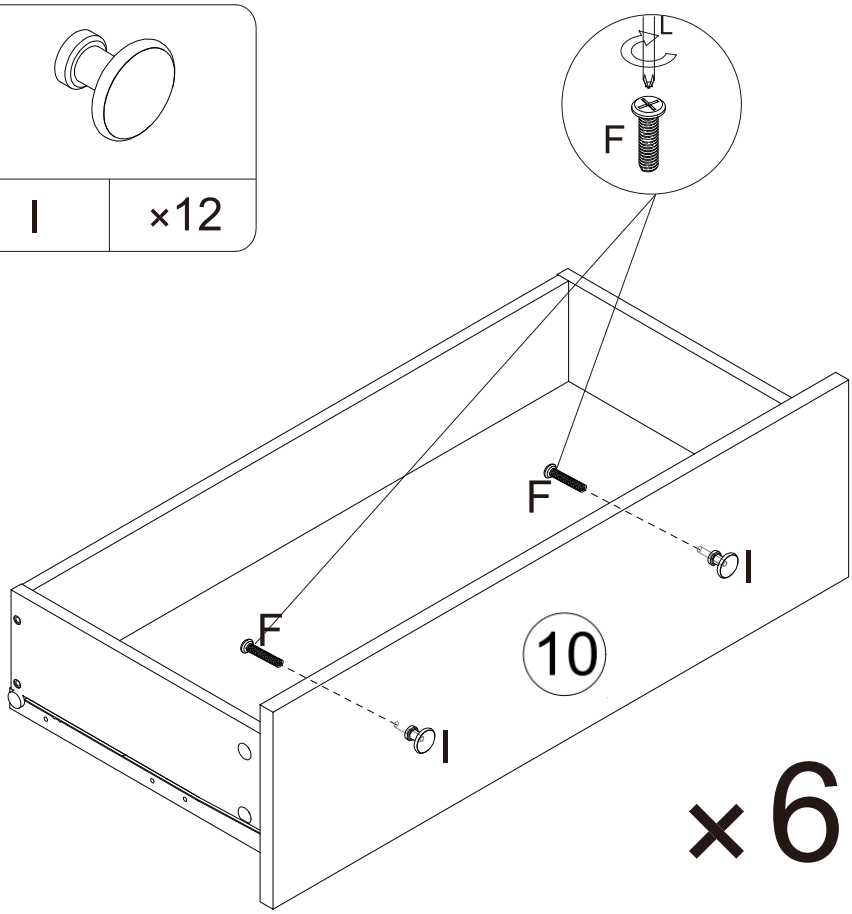

STEP 16

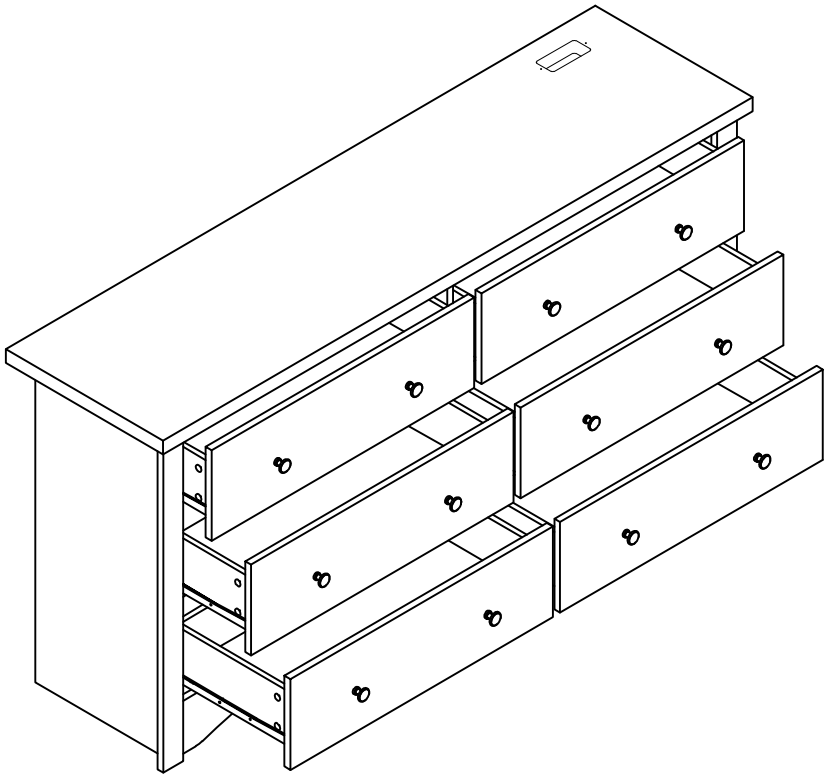

STEP 17

3x15mm		
E	×4	
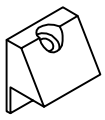		
J	×4	
4x18mm		
D	×2	

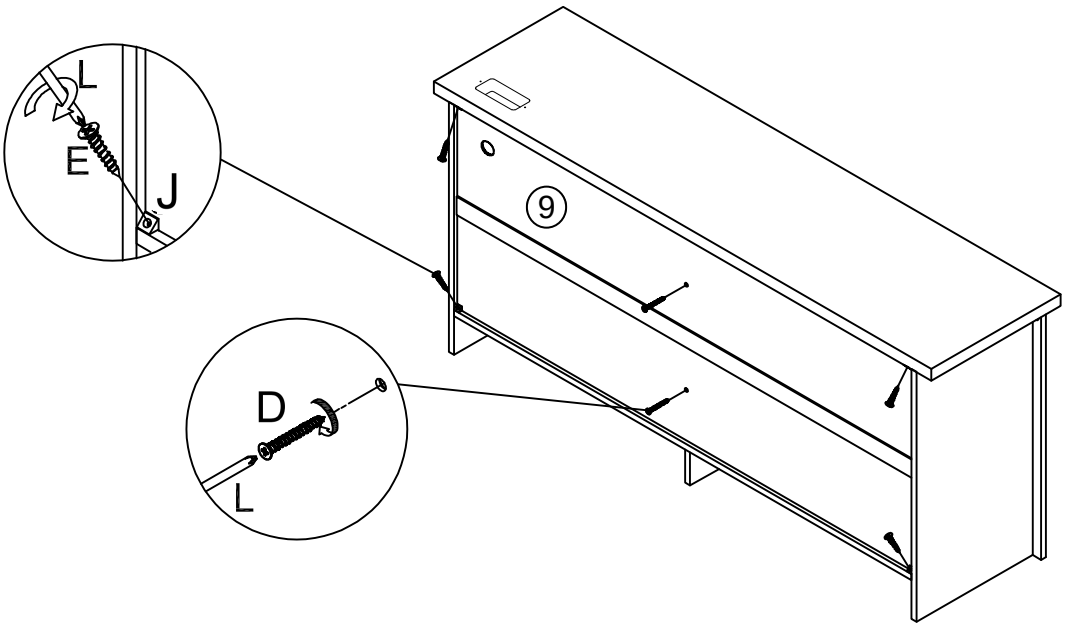

STEP 18

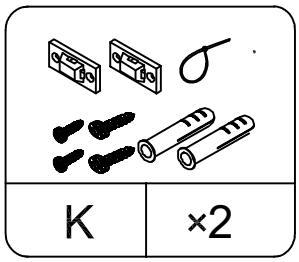

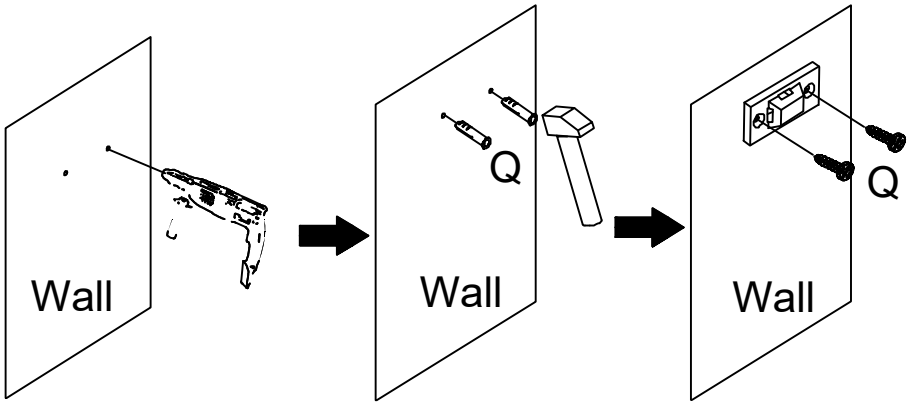

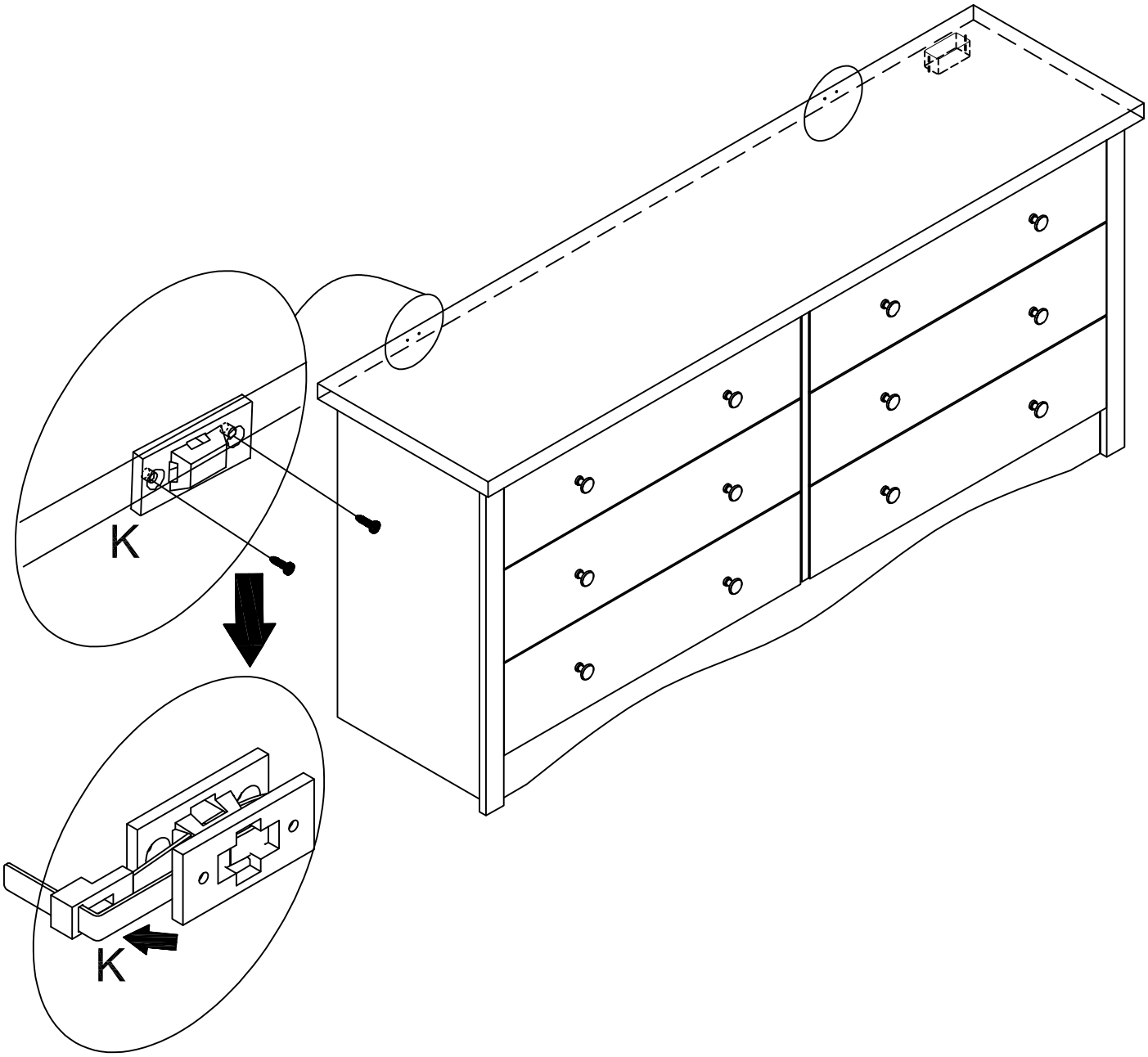

STEP 19

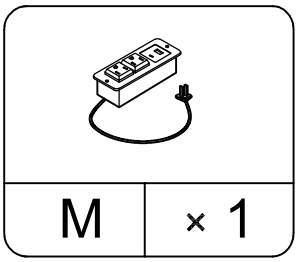

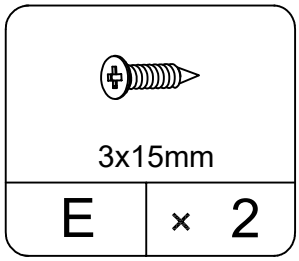

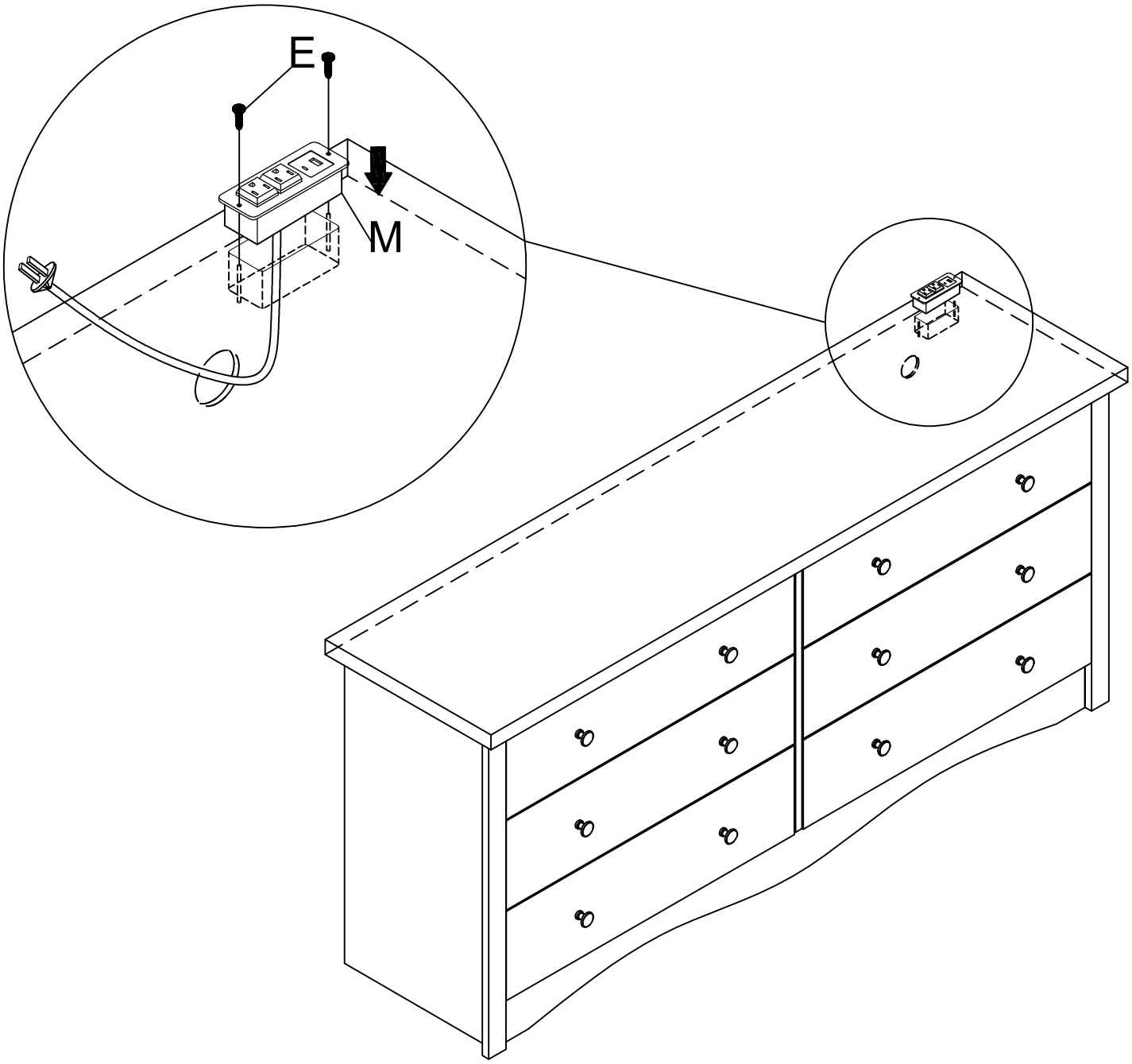

FURNITURE CARE AND MAINTENANCE

Particleboard

Thank you for your purchase. We want your item to last as long as possible. To ensure the product gives you years of service, please refer to this care and maintenance guide.

MAINTENANCE

- **Tighten all bolts and screws again within the first 2 weeks of assembly**
- **Check the tightness of all bolts every 2 months, tighten them if necessary**

CLEANING

- Clean the surface of the MDF and PB (medium - density fiberboard) with a lightly dampened cloth.
- Small amount of mild soap can be used if necessary.
- Dry thesurface immediatelyaftercleanin

⚠ **DO NOT use bleach or alcohol detergent to clean the surface.**
⚠ **DO NOT apply wood treatment on parts made with PB.**

Particleboard will swell and distort when suffer .
Make sure to dry the furniture immediately after cleaning