TV Cabinet
Installation Instructions

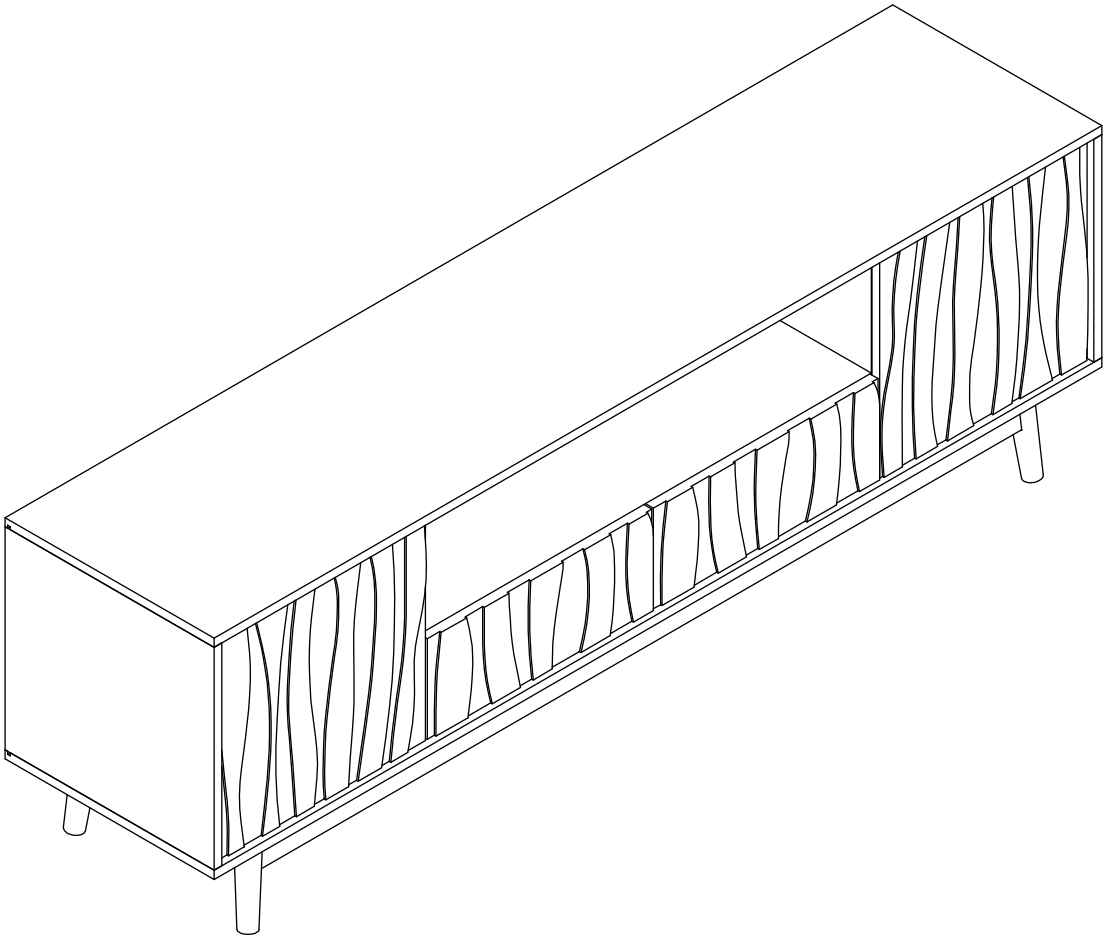

#SC005C-M

Contents

Before Use

General Guidelines.....2
Warning.....2
Material Properties.....2
Assembly Instructions.....2
Tools You May Needs.....2

Installation Guide

Parts List.....3-4
Accessories List.....5
Exploded Views.....6
#B (connector bolt) Installation steps.....7
Incorrect installation.....8
#A (eccentric cam lock) Installation steps.....8
Watch The Installation Video To Assist With Installation.....8
Installation Steps.....9-23

Maintenance & Troubleshooting

Use and Maintenance.....24
Trouble Shooting.....25

Special Accessories Installation Instructions

Hinge Adjustment Diagram.....26

After-Sales Warranty.....27

General Guidelines

- Please read the following instructions carefully and use the product accordingly.
- Please keep this manual and hand it over when you transfer the product.
- Product is intended for indoor use only. It must be assembled and used according to the instructions. The seller does not accept any responsibility for damage or injury resulting from improper assembly or use.
- This summary may not include every detail of all variations and considered steps.
- Please contact us when further information and help are needed.

Warning

- Children are not allowed to assemble the product. During assembly, keep any small part out of reach of children as they may be fatal if swallowed or inhaled.
- Children are not allowed to stand, climb or play on the product to avoid serious bodily injury by toppling.
- Keep plastic packing bags out of reach of children to avoid any potential danger, such as suffocation.
- Avoid sharp objects and corrosive chemicals to prevent damage to the product or bodily injury.

Material Properties

1. Solid Wood

Trees will have a unique texture, scar, color and other natural marks during their growth. These elements constitute the natural beauty of wood. After being made into furniture, there will be discoloration when viewed under different light and different angles. That is because different grain minerals and light intensity affect vision, which is a normal phenomenon.

2. Marble and Sintered Stone

The pattern of marble and sintered stone is unique to each piece. Due to the characteristics of the material, there is no guarantee that the pattern of each piece will be consistent with the pattern seen at the time of purchase.

Assembly Instructions

- Read these instructions carefully and keep for future reference. Refer to parts inventory for guidance, and ensure you have all pieces before starting.
- When assembling, place all parts on a soft, clean, and flat surface such as a carpet to prevent scratches.
- During assembly, align all screws with the corresponding pre-drilled holes first and then tighten them one by one.
- Do not discard any contents until after assembly is complete to avoid accidentally discarding small parts or hardware.

Tools You May Needs







- Note: It is recommended that installation of the product be done by a qualified licensed furniture assembler.

PARTS LIST

1 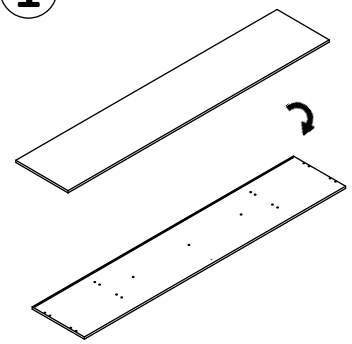	2 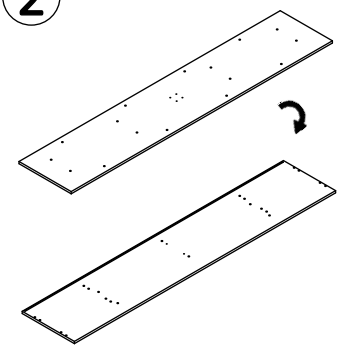	3 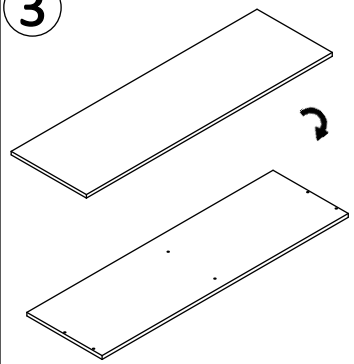	4 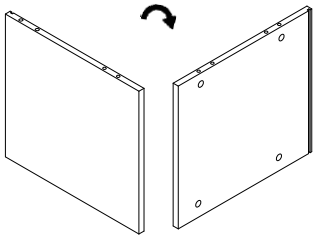
1PC	1PC	1PC	1PC
5 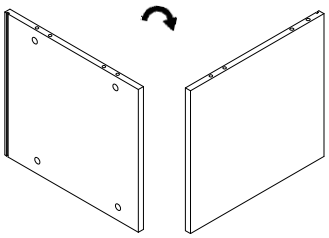	6 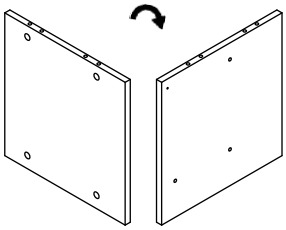	7 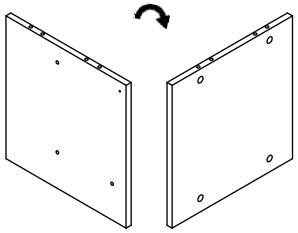	8 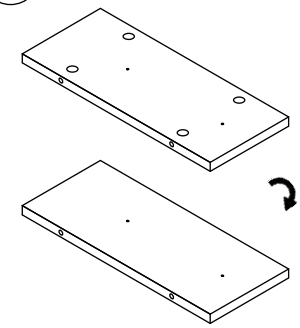
1PC	1PC	1PC	1PC
9 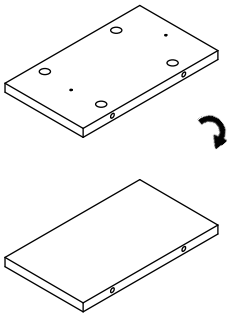	10 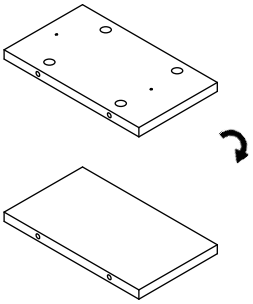	11 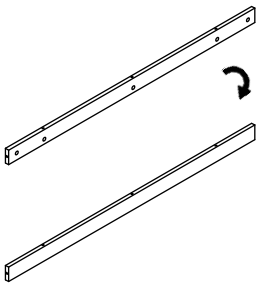	12 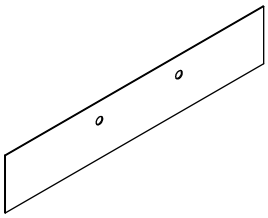
1PC	1PC	1PC	1PC
13 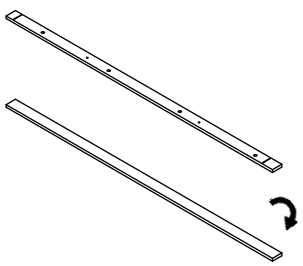	14 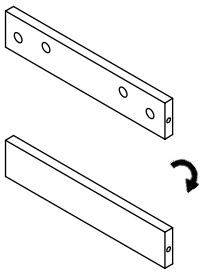	15 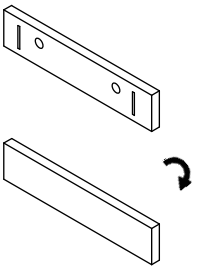	16 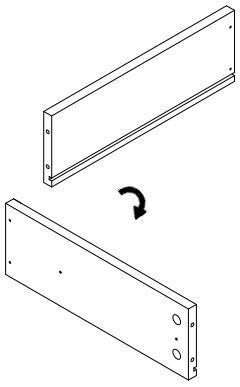
2PCS	2PCS	2PCS	2PCS

PARTS LIST

17 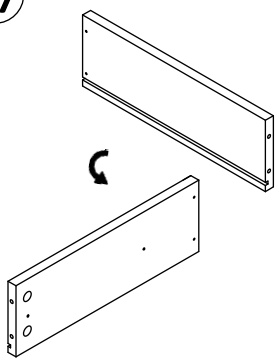	18 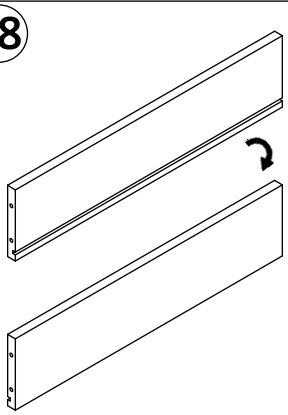	19 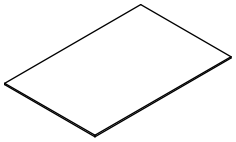	20 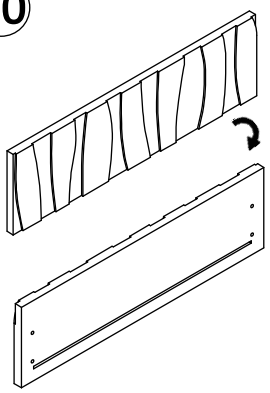
2PCS	2PCS	2PCS	1PC
21 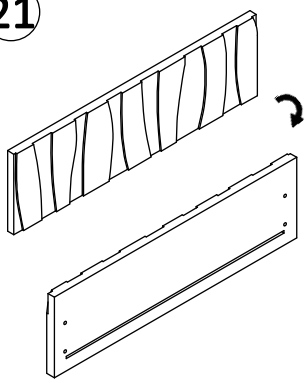	22 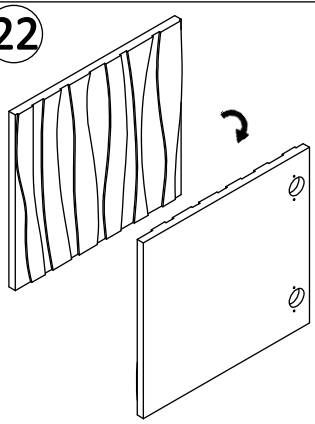	23 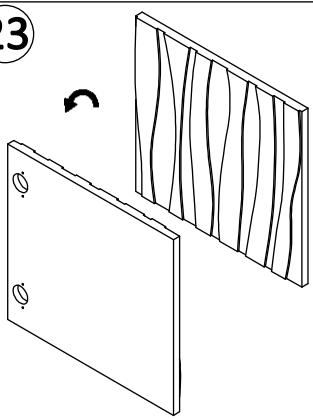	
1PC	1PC	1PC	

- The number in the upper left corner indicates the panel code, and the number in the lower middle indicates the quantity.
- As some panels feature holes on both sides, both front and back views are provided accordingly in the parts list.
- If you encounter any missing or damaged panels, please contact us immediately at ATJafurn@outlook.com. We will prioritize resolving your issue promptly.

HARDWARE LIST

A		B		C		E		F	
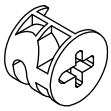		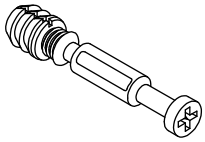		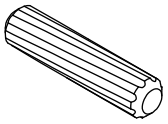		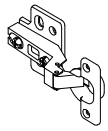			
Ø15*10MM	63PCS	Ø6*35MM	63PCS	Ø7*38MM	16PCS		4PCS	Ø3.5*35MM	8PCS
G		**H**		**I**		**J**		**K**	
				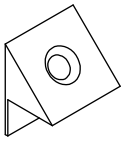		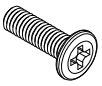		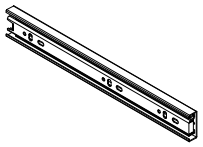	
Ø3.5*14MM	80PCS	Ø3.5*30MM	1PC		10PCS	Ø6*35MM	8PCS	10''	4PCS
L		**M**		**N**		**O**		**P**	
		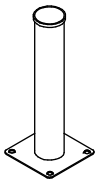		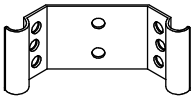		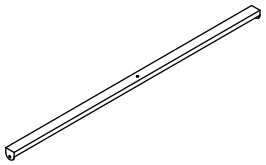			
150MM	4PCS	150MM	1PCS		4PCS	877*40*20MM	1PC	Ø4*14MM	4PC

Exploded Views

Each wooden board has an number sticker. Match them one-by-one according to the steps in the assembly manual.

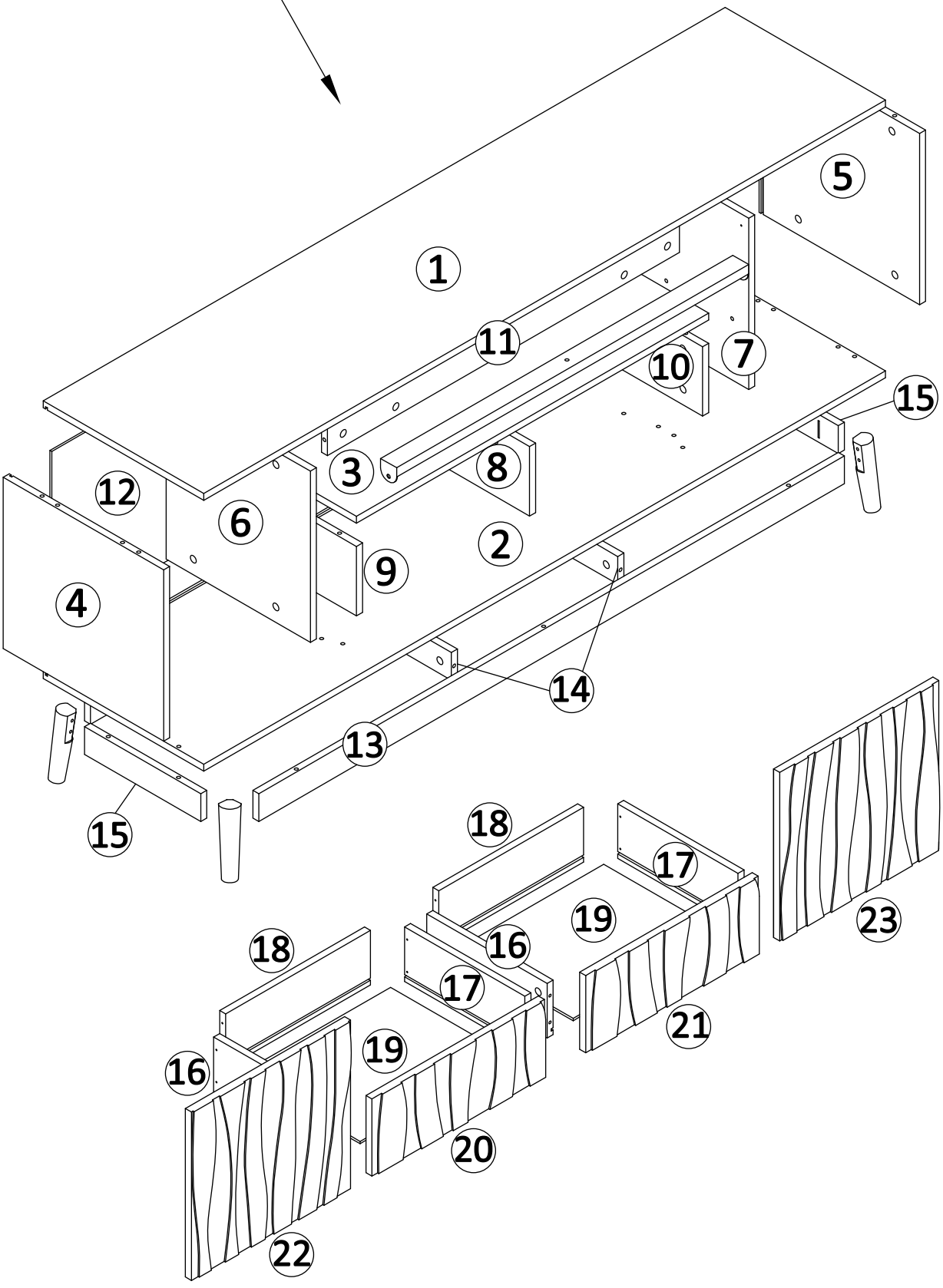

#B (connector bolt) Installation steps

Step 1

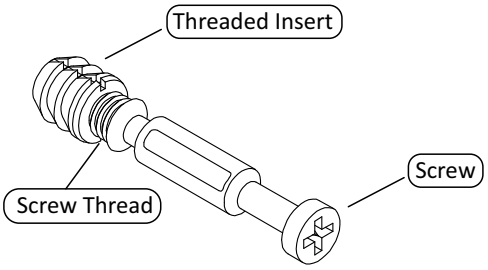

1. The structure of #B (connector bolt) is divided into threaded Insert and screw.
Preparation: Please note that the threaded insert and screw do not need to be tightened; two-thirds of the threads should be exposed.

Step 2

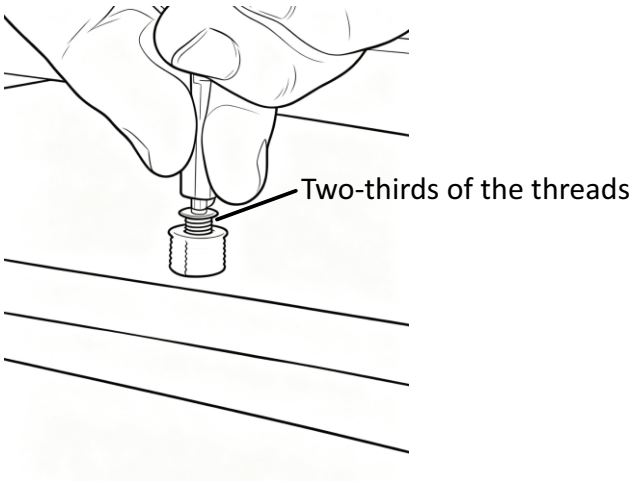

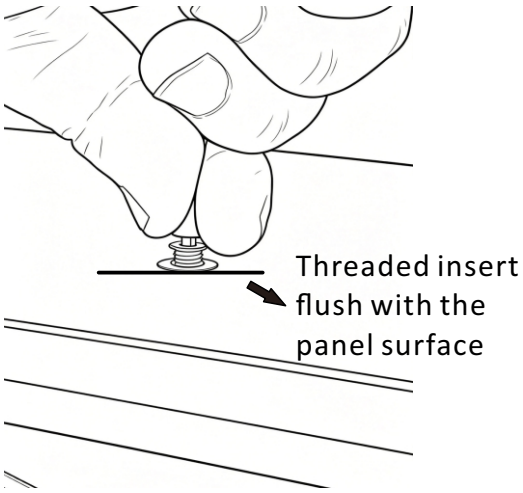

2. Insert #B (connector bolt) into the hole by hand. Initially, insert the threaded insert (left image). The threaded insert must be flush with the panel surface, with part of the screw exposed (right image).

Step 3

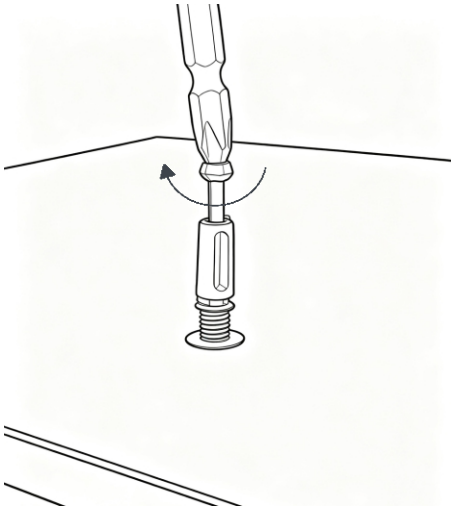

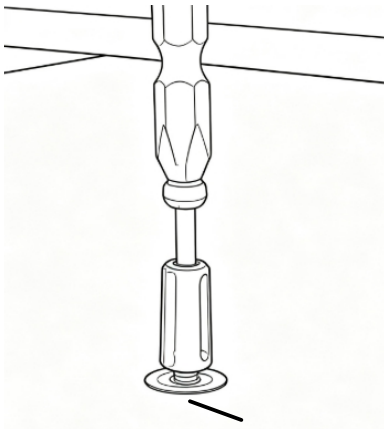

When the threaded insert is flush with the panel, #B is already installed.

3. Use a screwdriver to drill the screw in until the threads disappear. Complete the installation of #B (connector bolt).

Incorrect installation

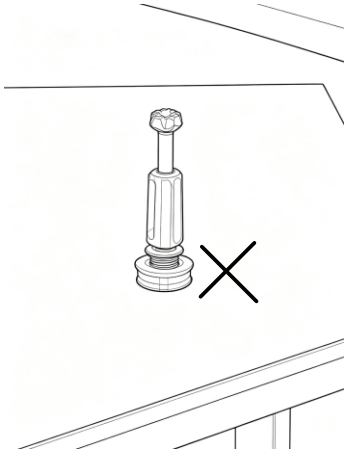

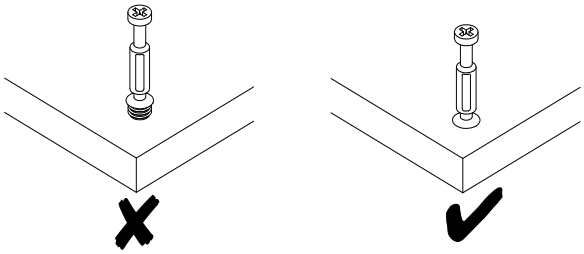

Incorrect Example: In step 2, when inserting the threaded insert, it wasn't fully inserted, not flush with the panel, and a small crack may appear around the hole.

Cause of Error: The thread length between the threaded insert and the screw is too short (less than two-thirds), preventing it from being inserted properly. Forcing it in will break the panel (left image).

Solution: Unscrew the screw slightly to leave sufficient thread length, then repeat steps 2-3.

#A (eccentric cam lock) installation steps

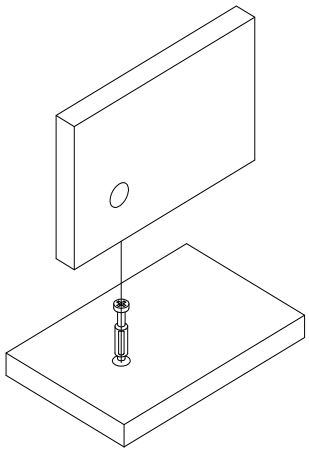

After installing #B (connector bolt), connect the panels to each other.

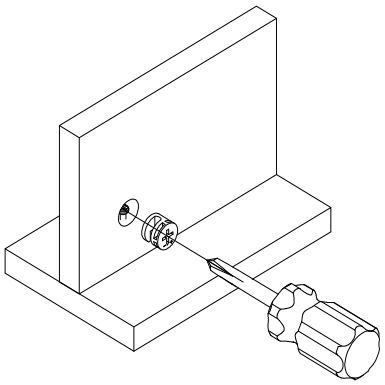

Align the arrow of the eccentric component with the screw rod.

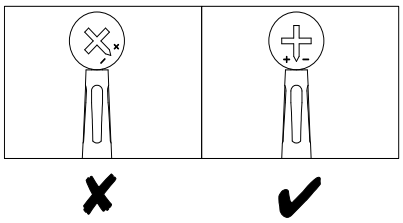

Pay attention to aligning the arrow of the eccentric part with the screw rod.

Watch The Installation Video To Assist With Installation

Attention!

Some steps may not be displayed intuitively on the paper manual, so we filmed the installation video. Please **use the camera APP to scan the QR code** to our brand website to watch the video. The website will not charge and will not record your personal information, so please feel free to use it.

Step 1

B 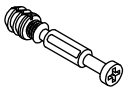 X30

As shown in the diagram, screw #B (connector bolt) into the corresponding holes of the panels 2 (front) /3/6/7/13 (x2) .

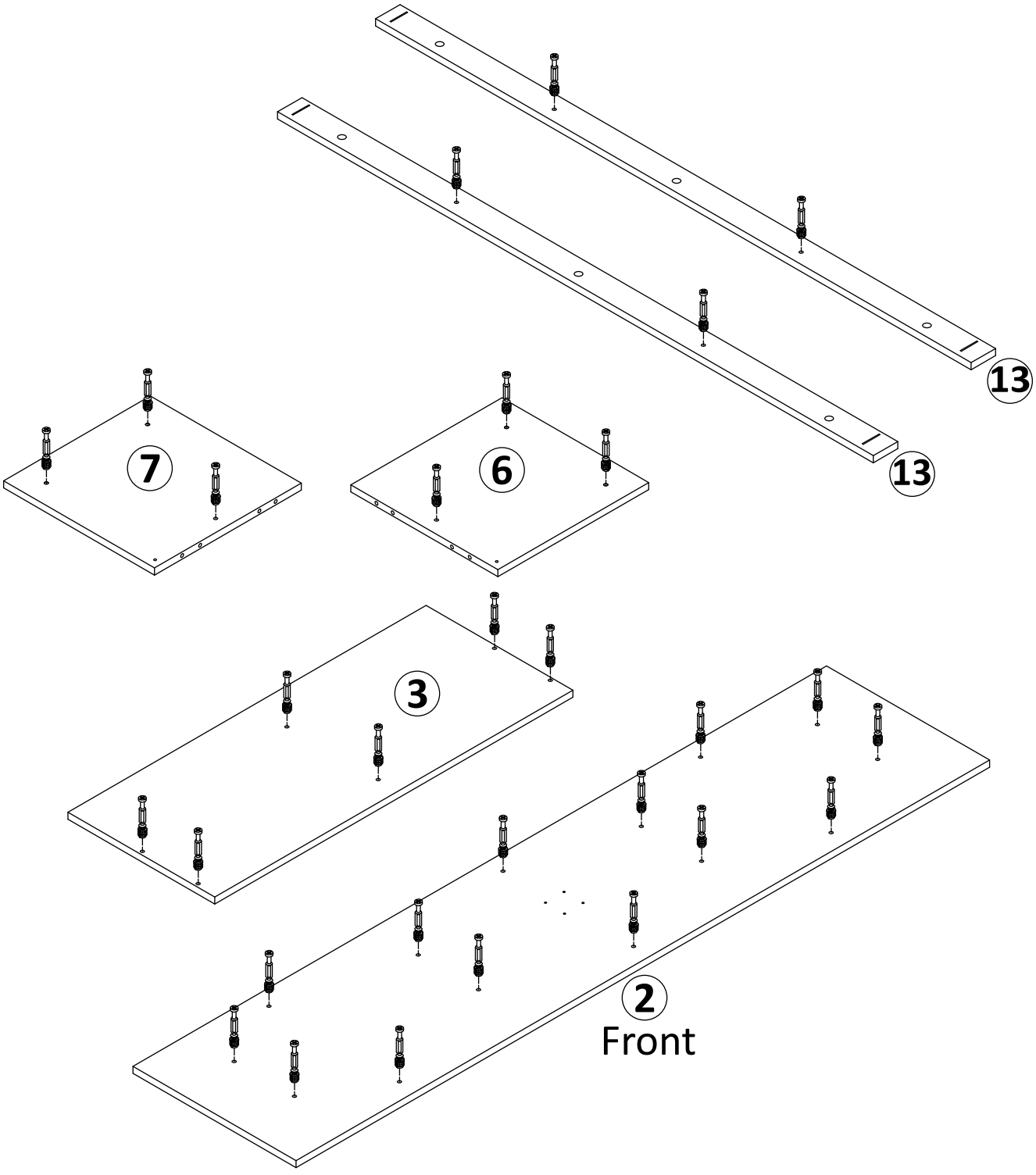

Step 2

A X4

As shown in the figure, install the two panels 14 with the holes on the long sides facing downwards between the two panels 13 (with the holes on the long sides facing downwards) and screw in #A (eccentric cam lock).

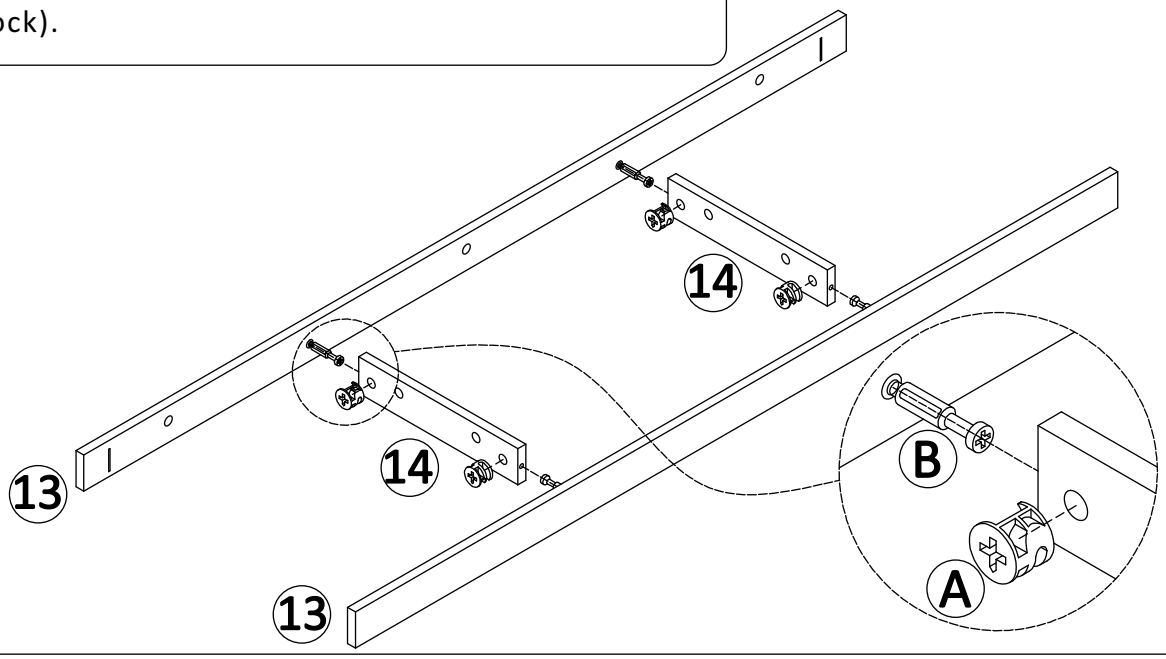

Step 3

G X24

J X8

L X4

N X4

Note: When installing panels 13, 14, and 15, make sure the side with the holes is facing down.

1.Snap the #N (accessories) fittings into the grooves on the edges of panels 13 and 15 to secure the four corners.

2. Place the #L (wooden legs) as shown. Connect #N (accessories) and #L with two #J (screws), and finally secure the sides of #N with # G (screws).

3. Follow the above steps to install the remaining #L (wooden legs).

Assembly Tip: Initially install all four #L feet loosely to allow for later adjustment before final tightening.

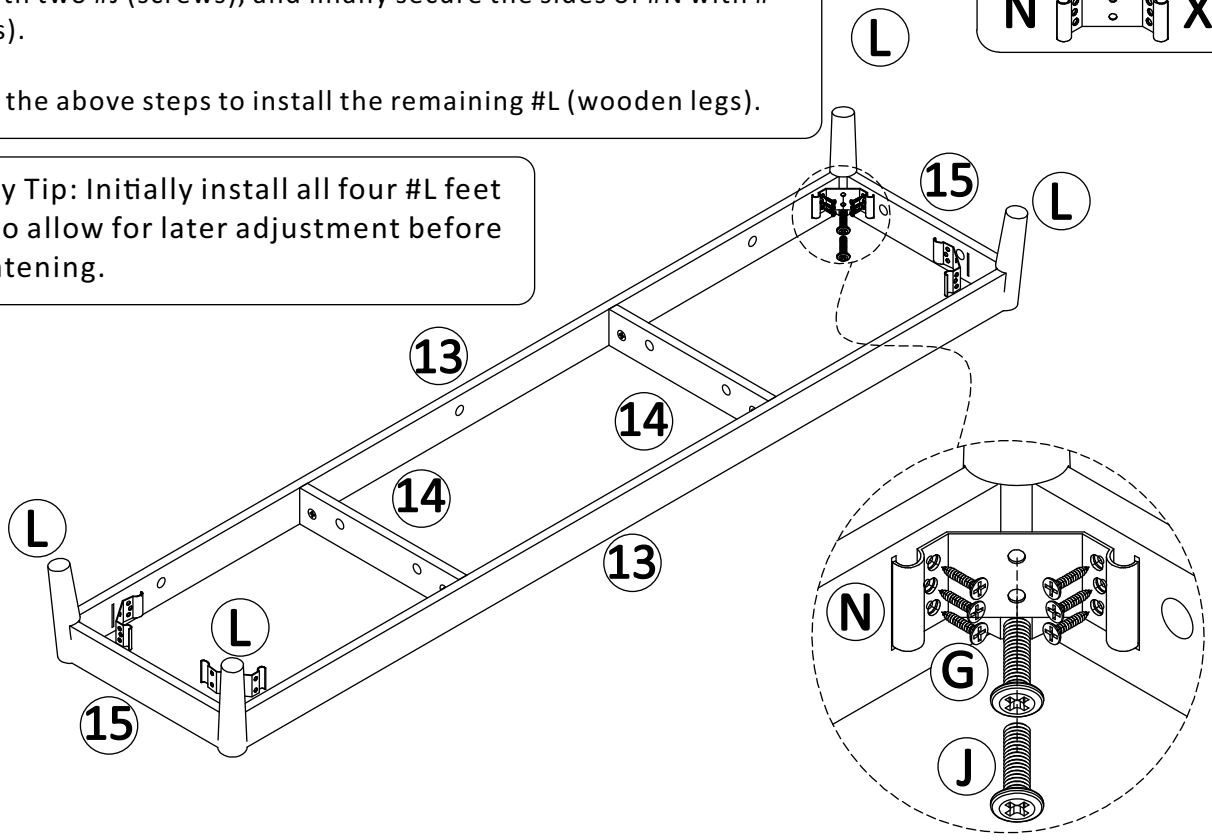

Step 4

Align TV stand base frame with panel 2, connect and secure with #A (eccentric locks) and tighten.

A X14

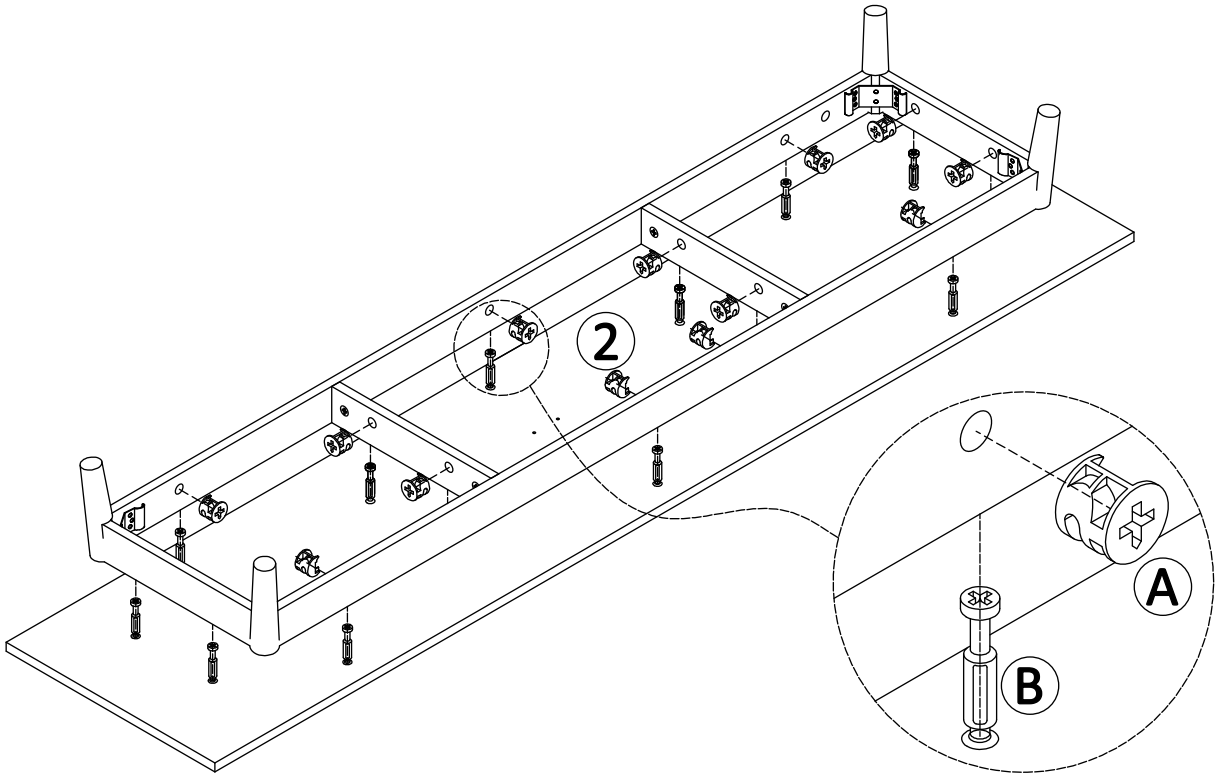

Step 5

Insert #P (screws) into #M matching hole and fasten to panel 2.

P X4

M X1

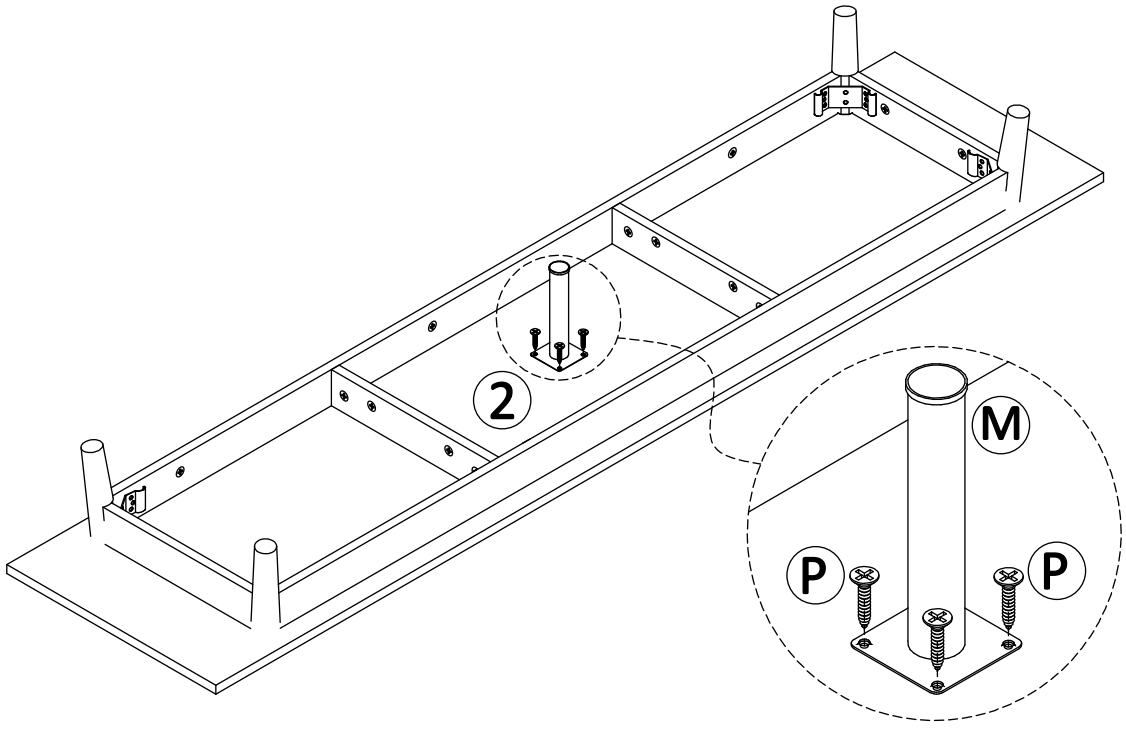

Step 6

Turn panel 2 over and screw screw #B (connector bolt) into panel 2.

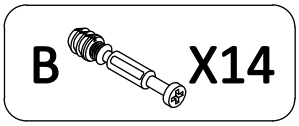

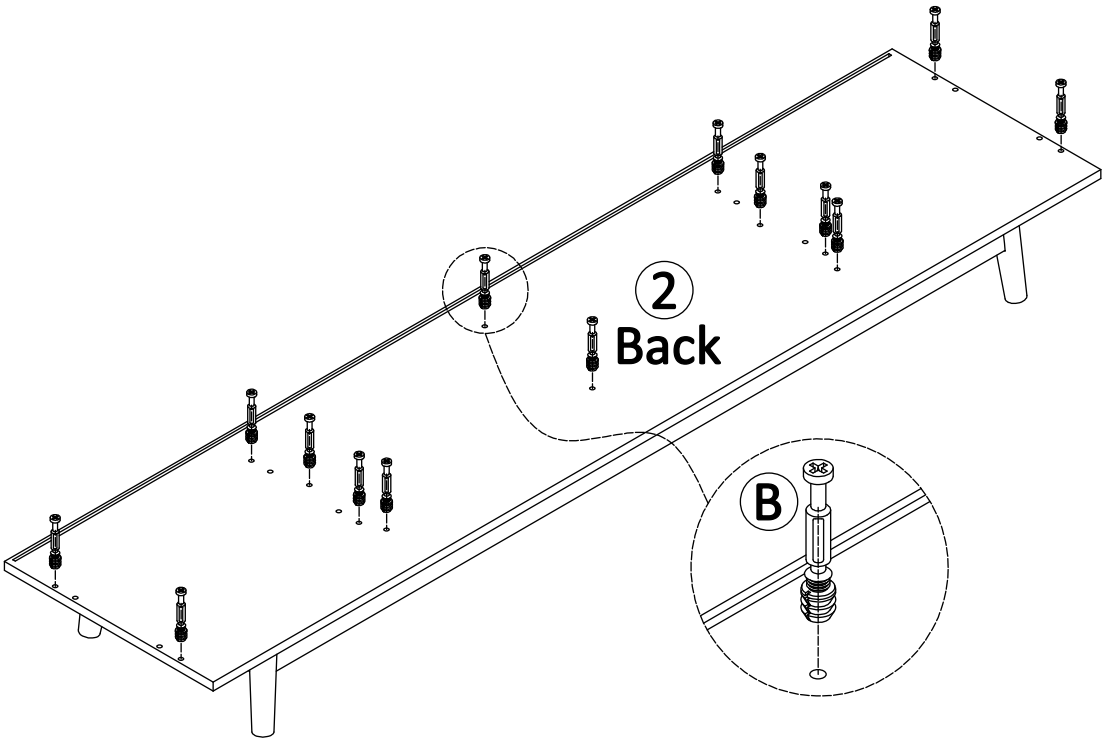

Step 7

Divide the guide rail K into two parts, K1 and K2.

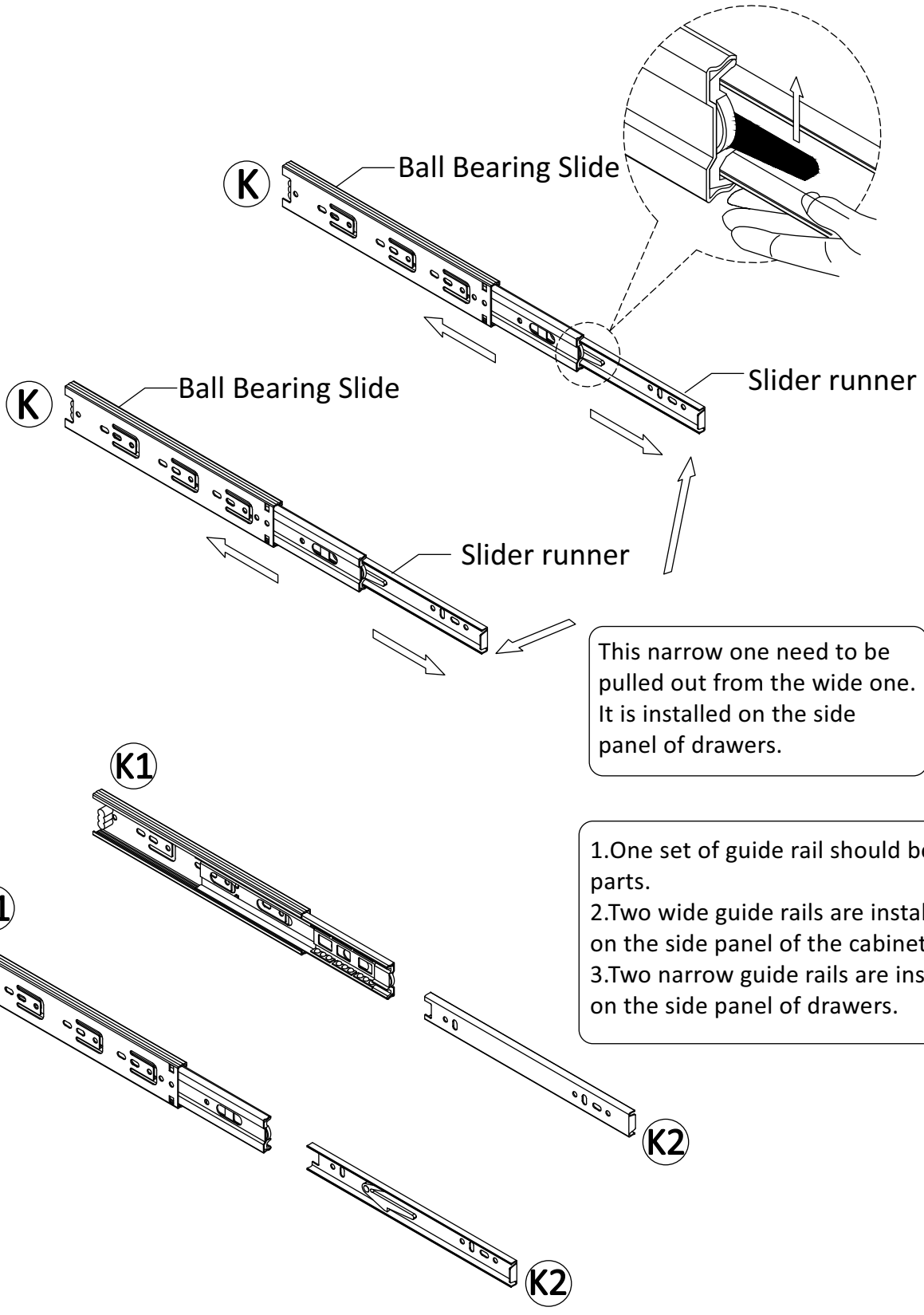

This narrow one need to be pulled out from the wide one. It is installed on the side panel of drawers.

1.One set of guide rail should be four parts.
2.Two wide guide rails are installed on the side panel of the cabinet.
3.Two narrow guide rails are installed on the side panel of drawers.

Attention:
Take care when installing the slide rails as they have been pre-lubricated.

Step 8

As shown: Secure two #K1 units to panels 9 and 10 using #G (screws).

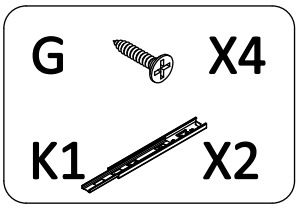

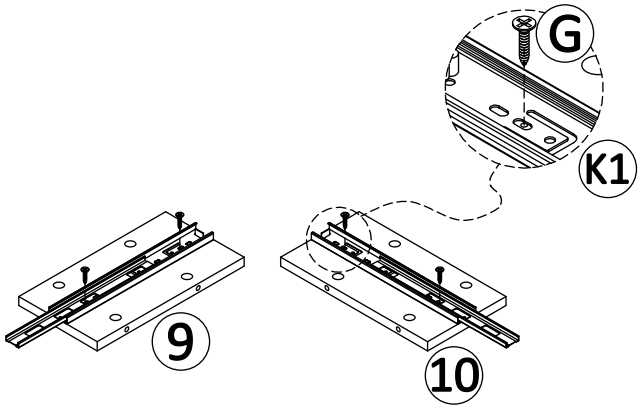

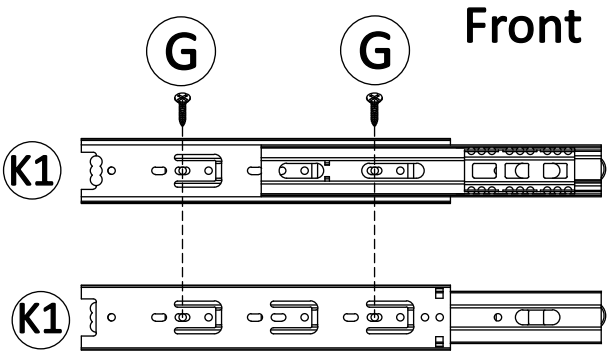

Step 9

As shown: Secure two #K1 units to panels 8 (front and back) using #G (screws).

Note that different hole positions are used when installing the guide rails on the front and back of panel 8.

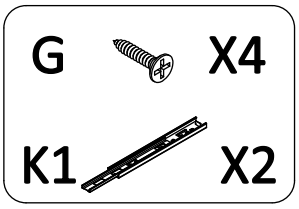

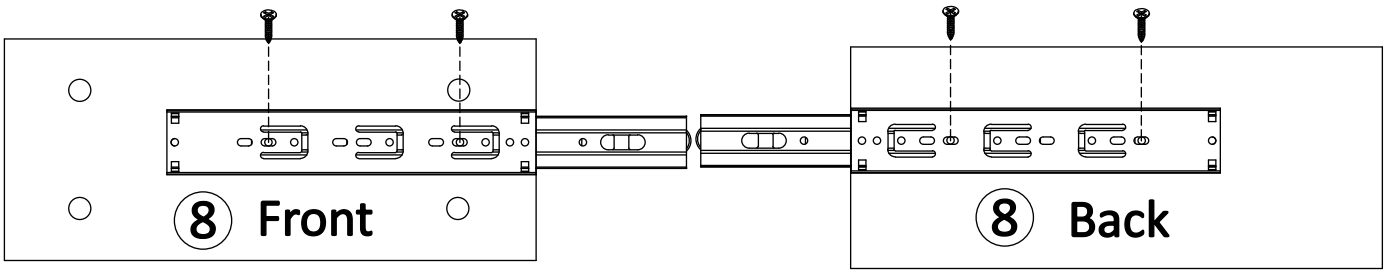

Tips: Screw the screw into the oval hole at the front of panel 8.

Tip: Screw the screws into the round holes on the back of panel 8.

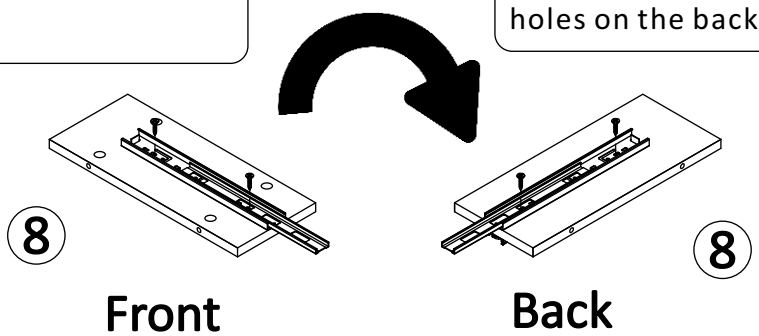

Step 10

A  X6

Insert #C (wood dowel pins) into panel 2, connect panel 8/9/10 to panel 2, then secure with #A (eccentric locks) and tighten.

Ensure that panels 8/9/10 are installed in the correct orientation.

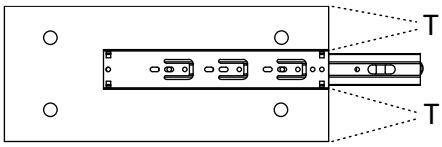

The narrow area is above.

The wide area is below.

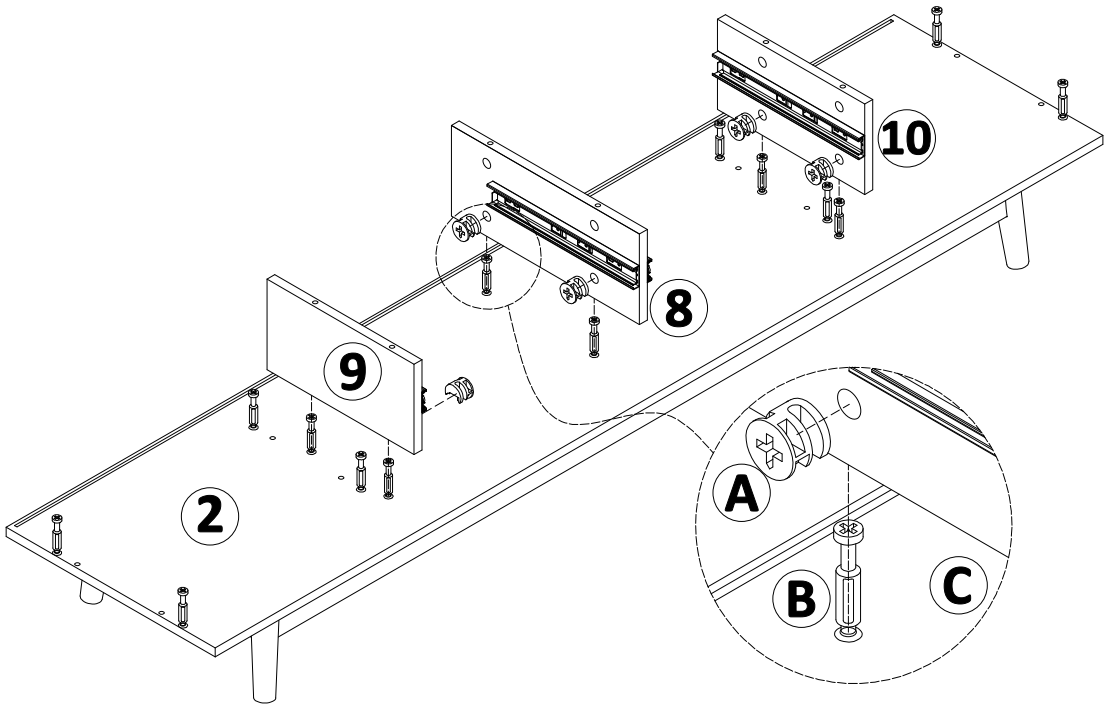

Step 11

Snap panels 6 and 7 into the sides of panels 3 and 11 and screw in #A (eccentric locks) to secure.

A X6

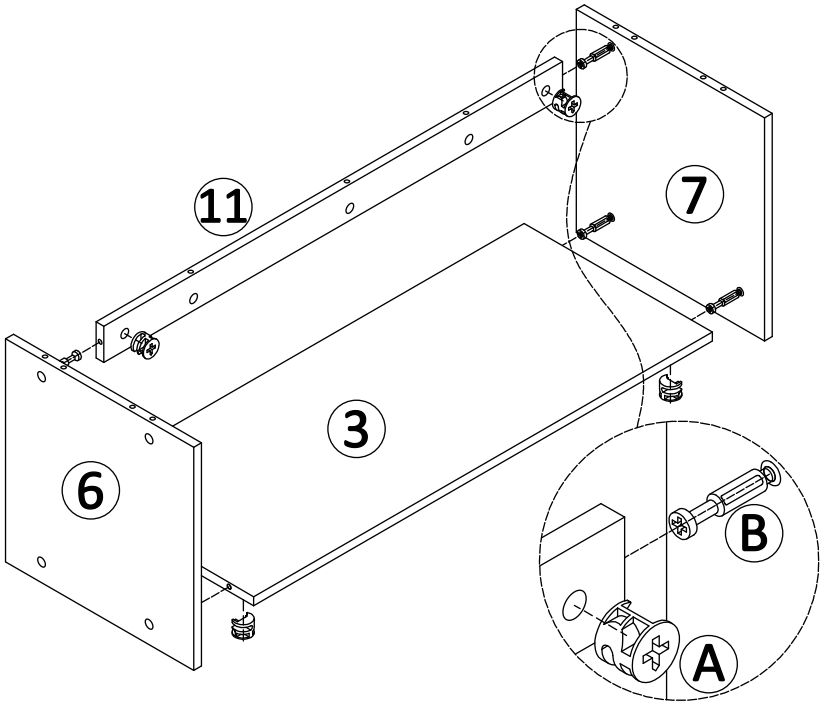

Step 12

1. Screw #C (wood dowel pins) into panel 2;

2. Then install the entire pre-assembled part (panels 3/6/7/11) onto panel 2 and screw in screw #A (eccentric locks) to secure.

A X10

C X4

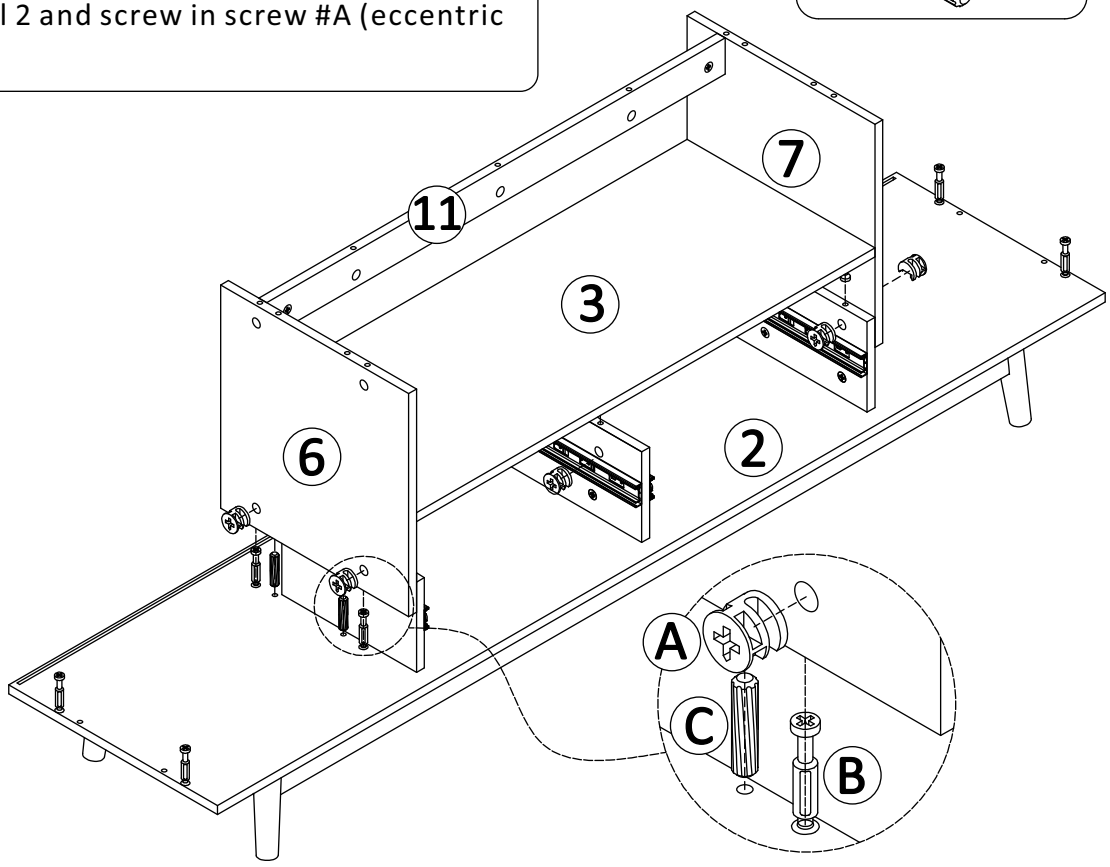

Step 13

1.As shown, insert #C (wood dowel pins) into the designated holes of panel 2.

2.Then, snap panels 4 and 5 onto panel 2 and secure with screws #A (eccentric locks).

A X4

C X4

When assembling, align the grooves of panels 4 and 5 with panel 2.

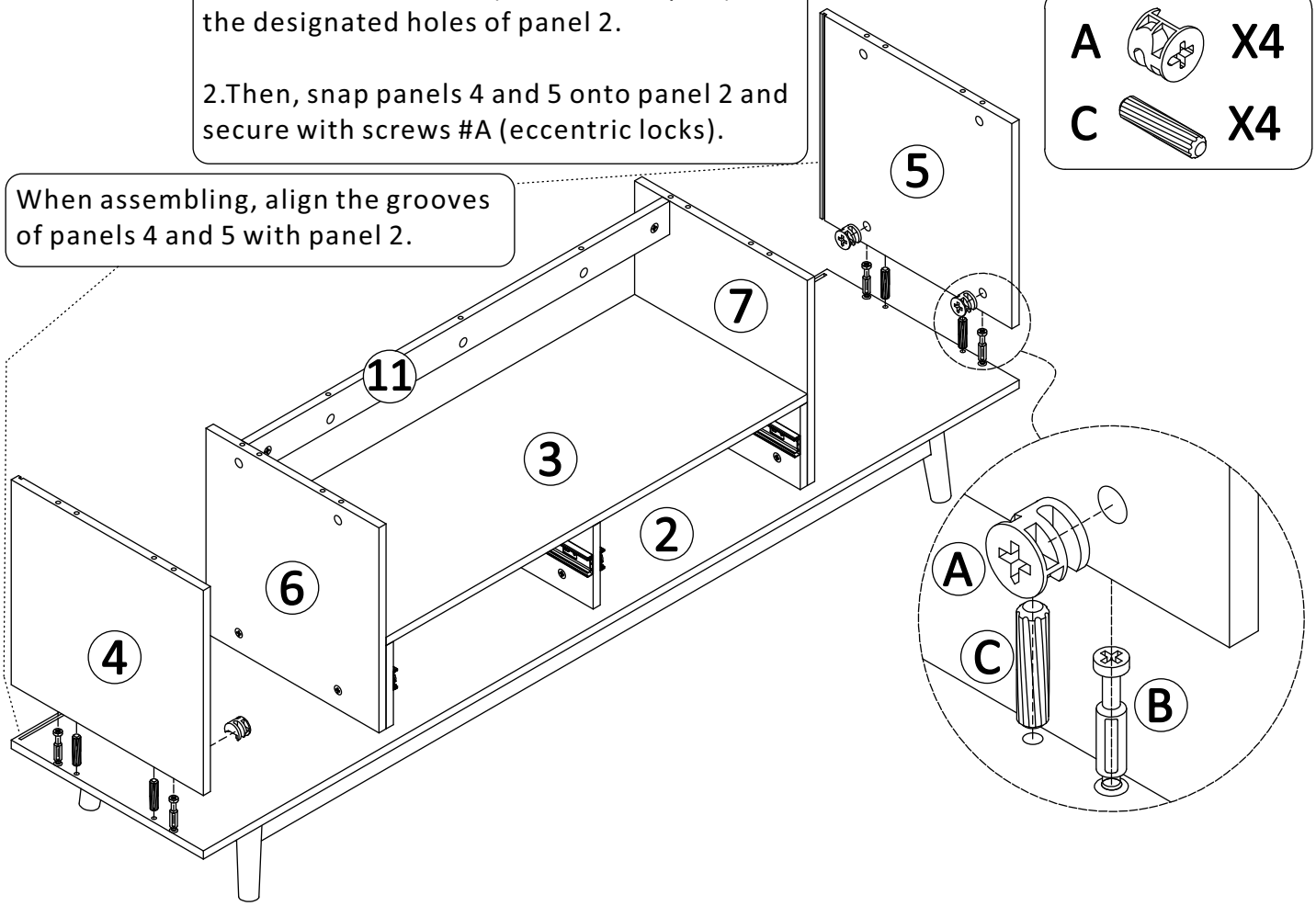

Step 14

Snap the panel 12 into the groove.

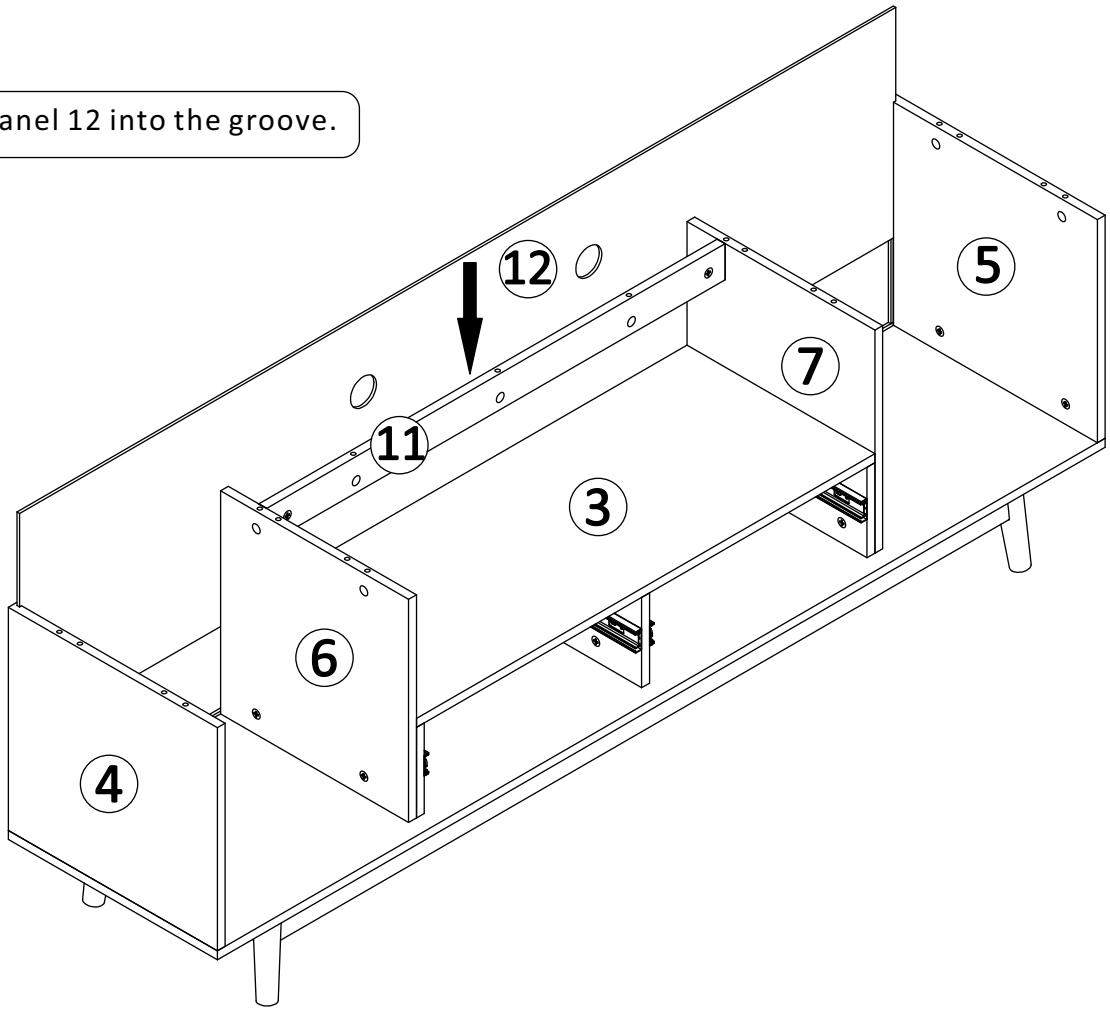

Step 15

Install fitting #O between panels 6 and 7 and secure both sides with #G (screws).

G X2

O X1

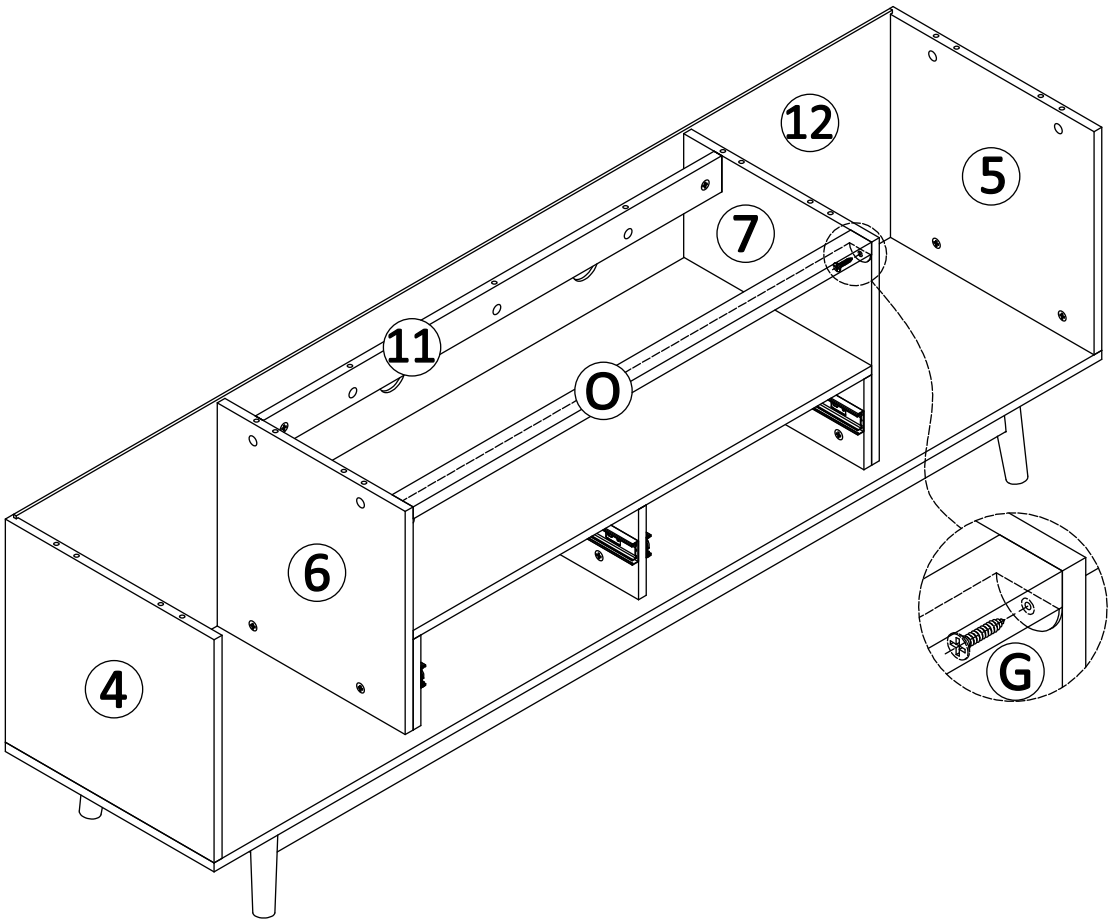

Step 16

Install screw #B (connector bolt) on panel 1/20/21.

B X19

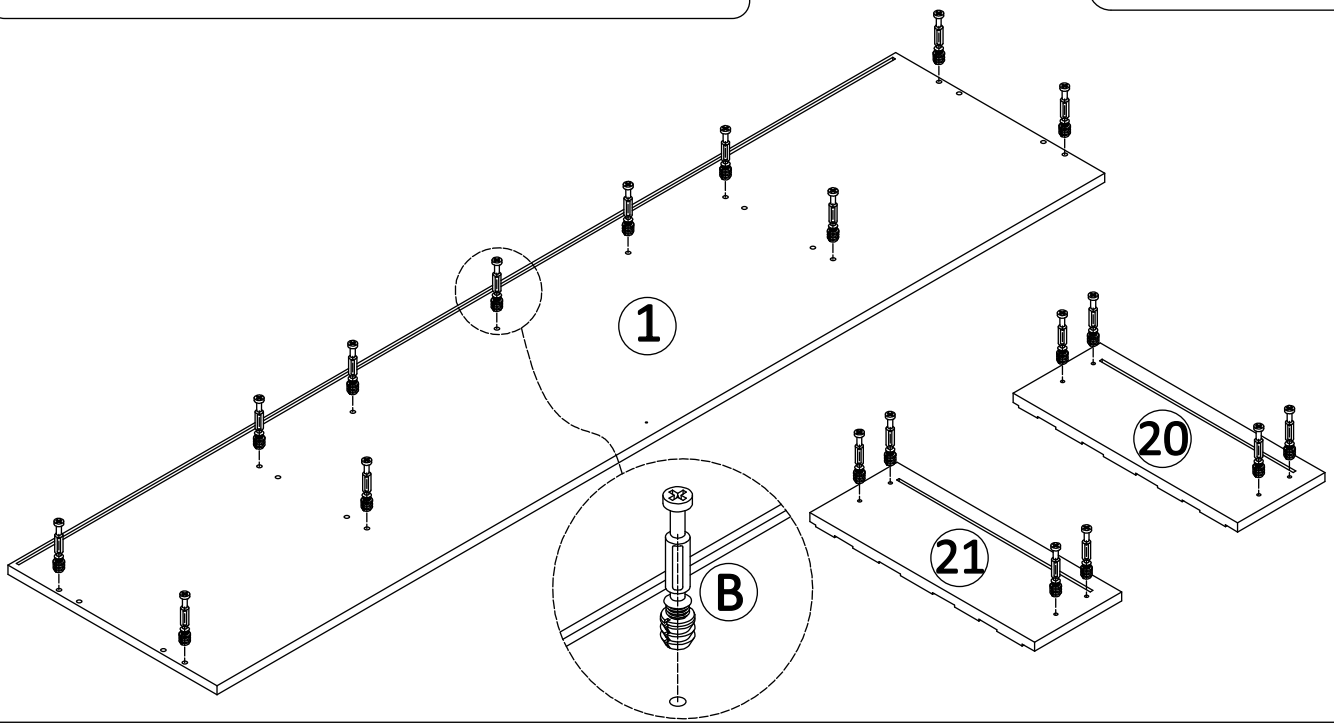

Step 17

1. Insert #C (wood dowel pins) into the pre-drilled holes and attach panel 1. Attach #A (eccentric cam lock) to the corresponding holes and tighten to lock.

2. Thread #H (screw) into fitting #O to permanently secure panel 1.

A X11
C X8
H X1

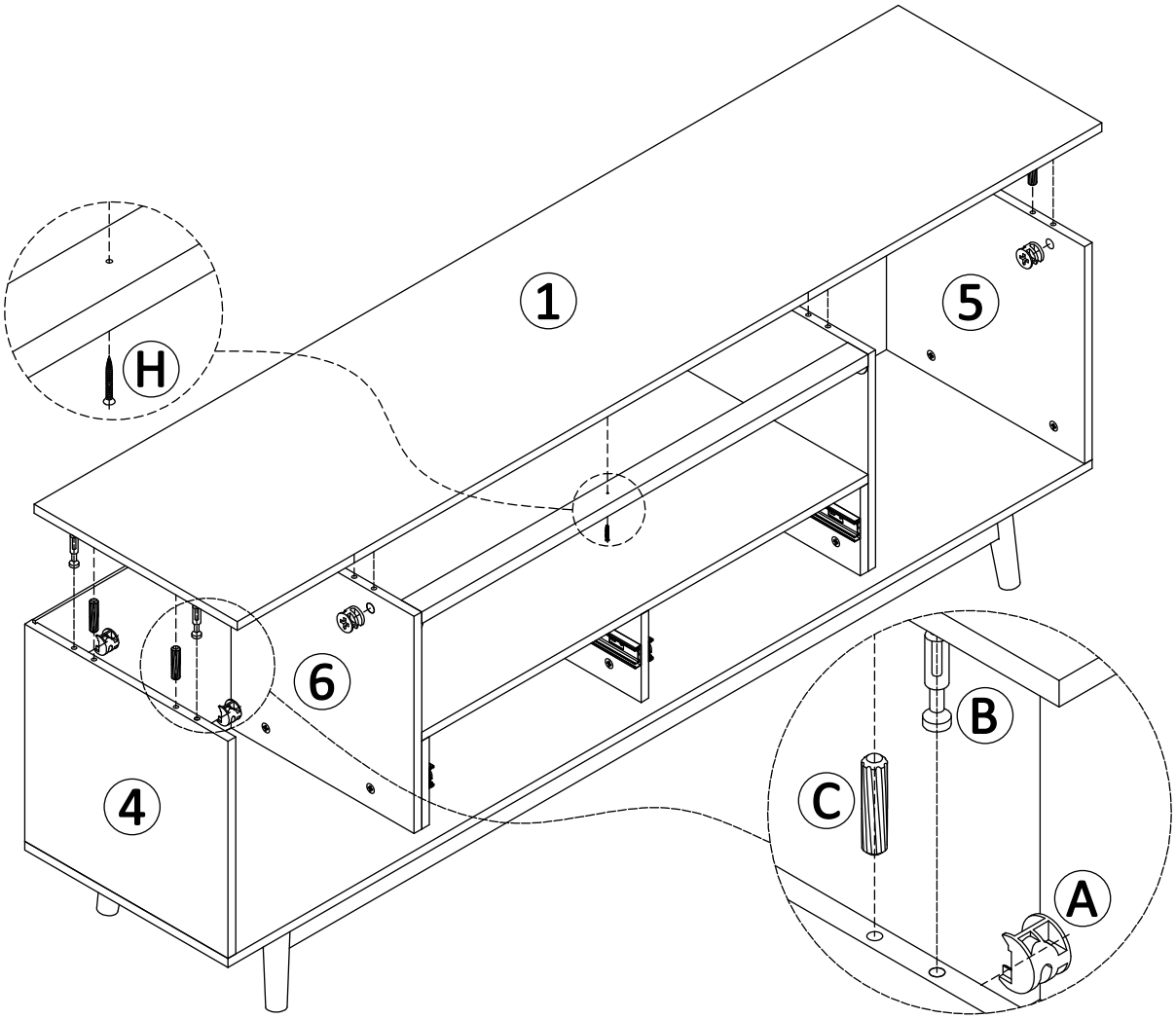

Step 18

Drawer Assembly:

Using #F (screws) secure panel 16 and panel 17 to both sides of panel 18, ensuring the grooves are aligned in the same direction. This step needs to be installed twice.

F X8

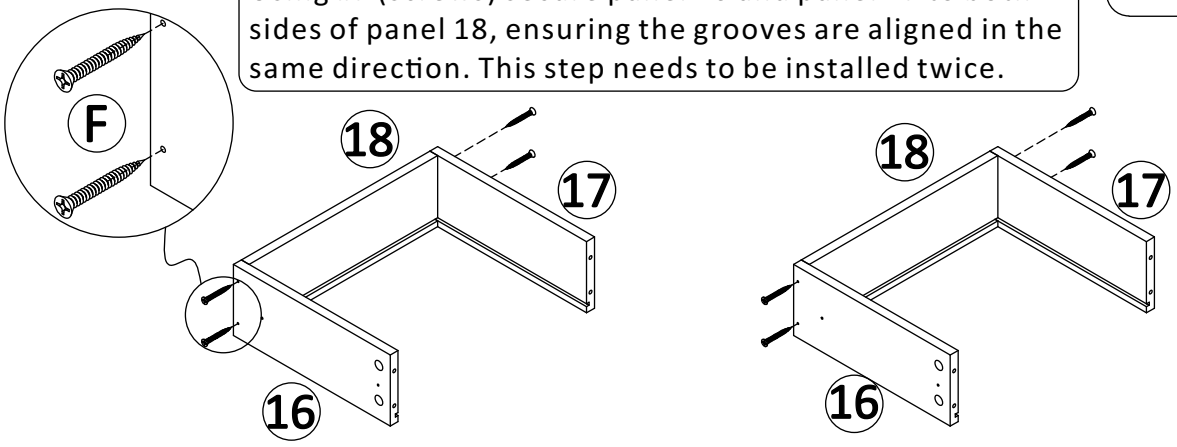

Step 19

Snap panel 19 into the groove. This step needs to be done twice.

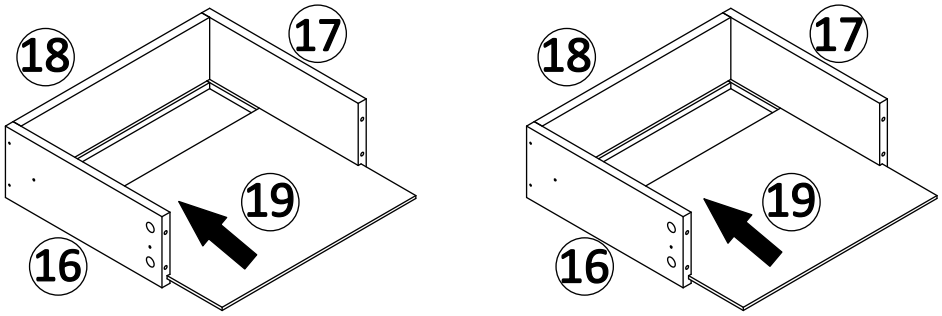

Step 20

A  X8

Install panel 20/21 (drawer front) to the pre-drawer assembly and secure it by screwing #A (eccentric cam lock) into the side mounting holes.

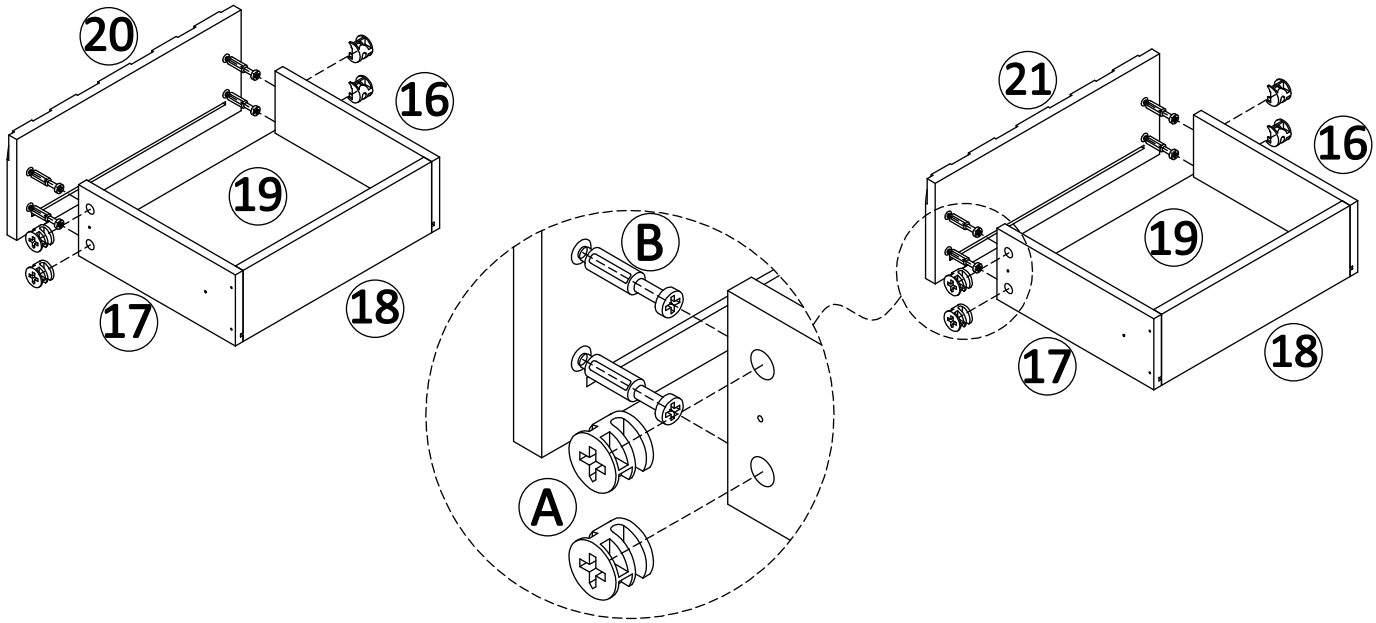

Step 21

Attach the #K2 to both sides of the drawer using the #G (screws).

G X8

K2 X4

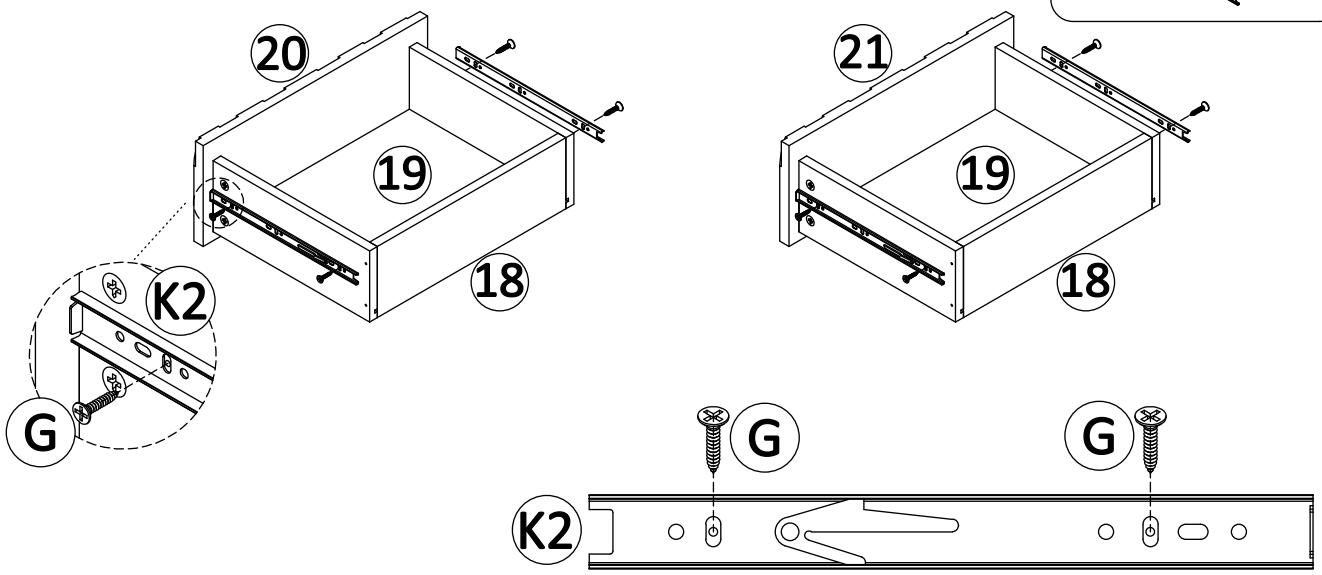

Step 22

Slide the drawer with the installed inner rails into the corresponding slots in the cabinet until it clicks into place.

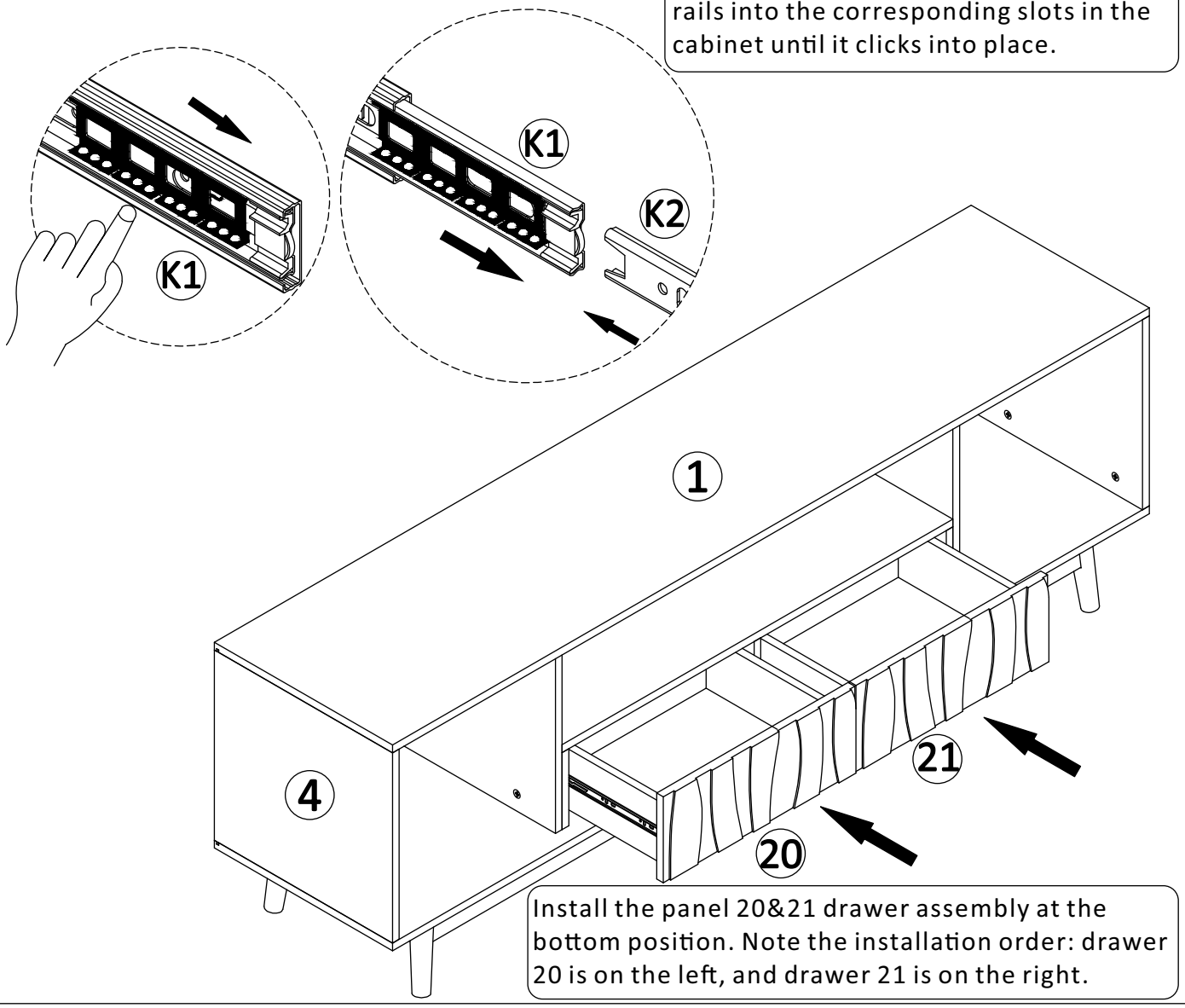

Install the panel 20&21 drawer assembly at the bottom position. Note the installation order: drawer 20 is on the left, and drawer 21 is on the right.

Step 23

As shown in the figure, install the #E (door hinge) to the designated position on panels 22 and 23 and tighten the #G (screws) to secure.

G X8

E X4

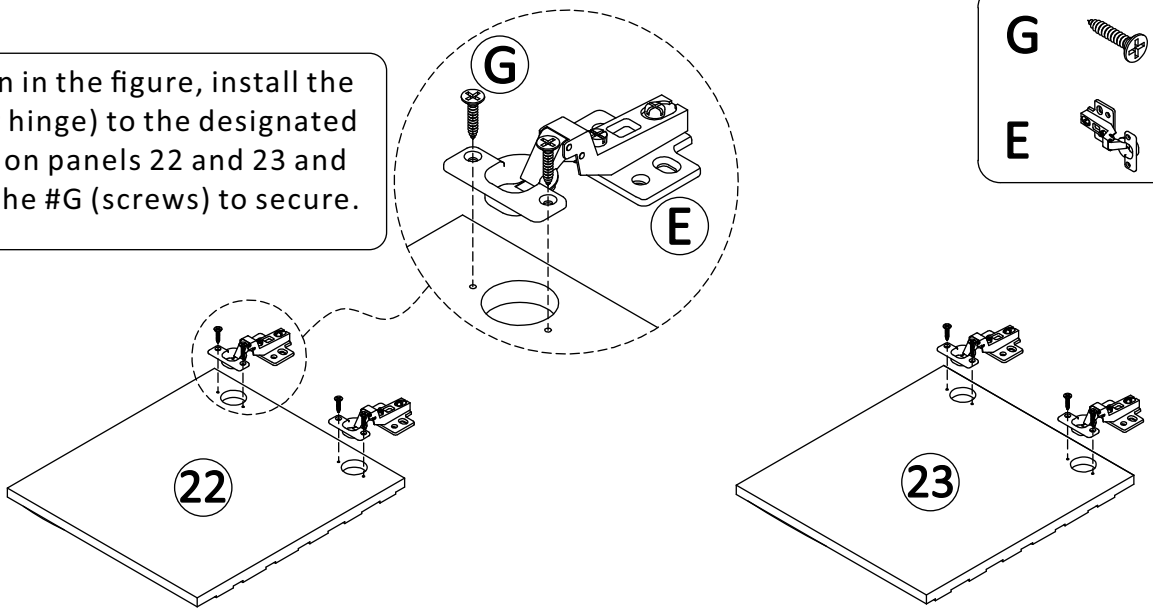

Step 24

As shown, attach panels 22 and 23 to the cabinet using #E (door hinges) and tighten with #G (screws). Please install panels 22 and 23 as shown in the figure.

G X16

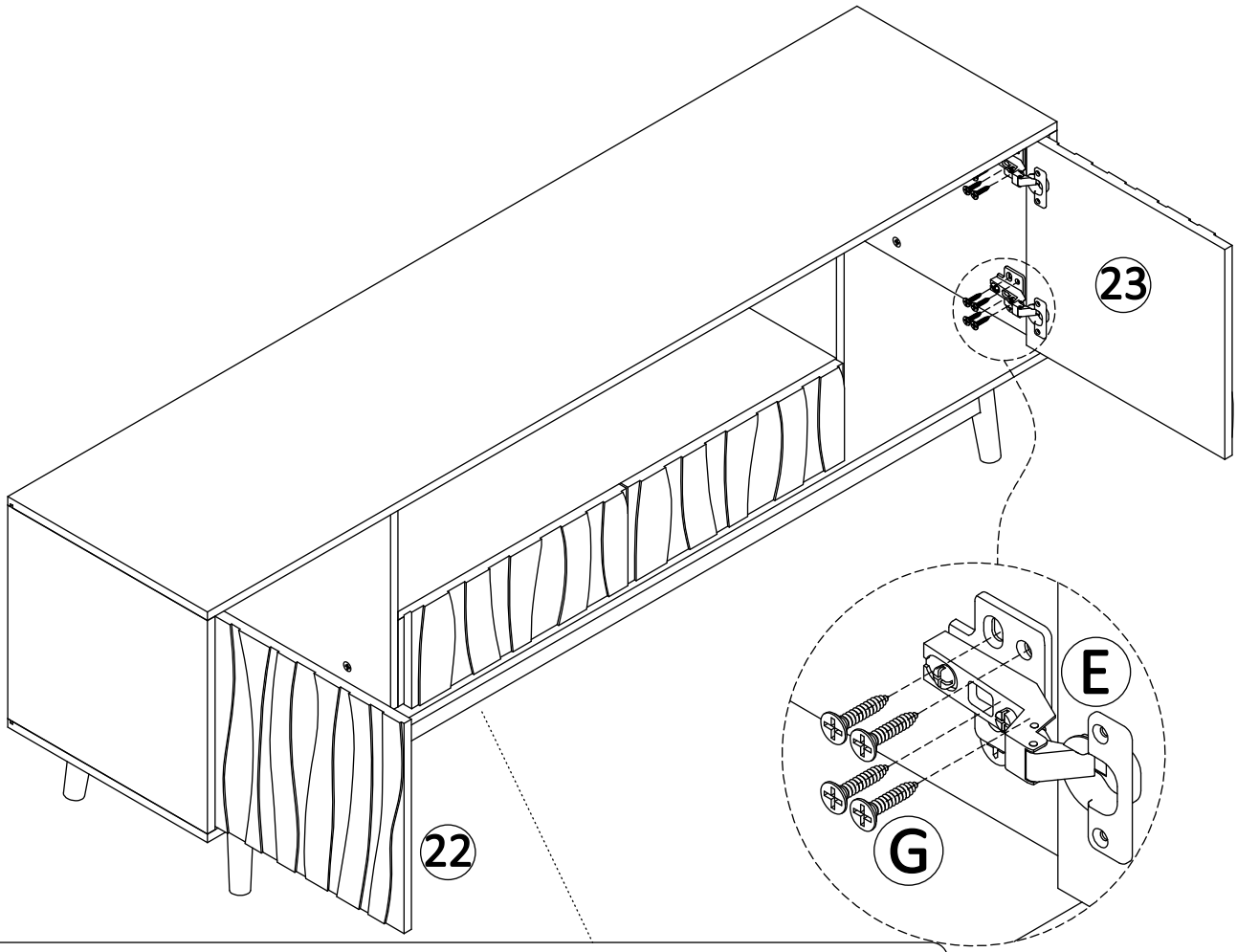

Tips: After installing the cabinet doors and drawers, the drawer front will protrude slightly. This is a normal design feature, as it serves as a handle for easy opening.

Step 25

This accessory requires inserting the protruding I (backplate bracket) into the gap of the other panel, then screwing in the #G (screws).

G X10

I X10

This step is to reinforce the two panels and prevent slippage. It is optional and does not affect normal use.

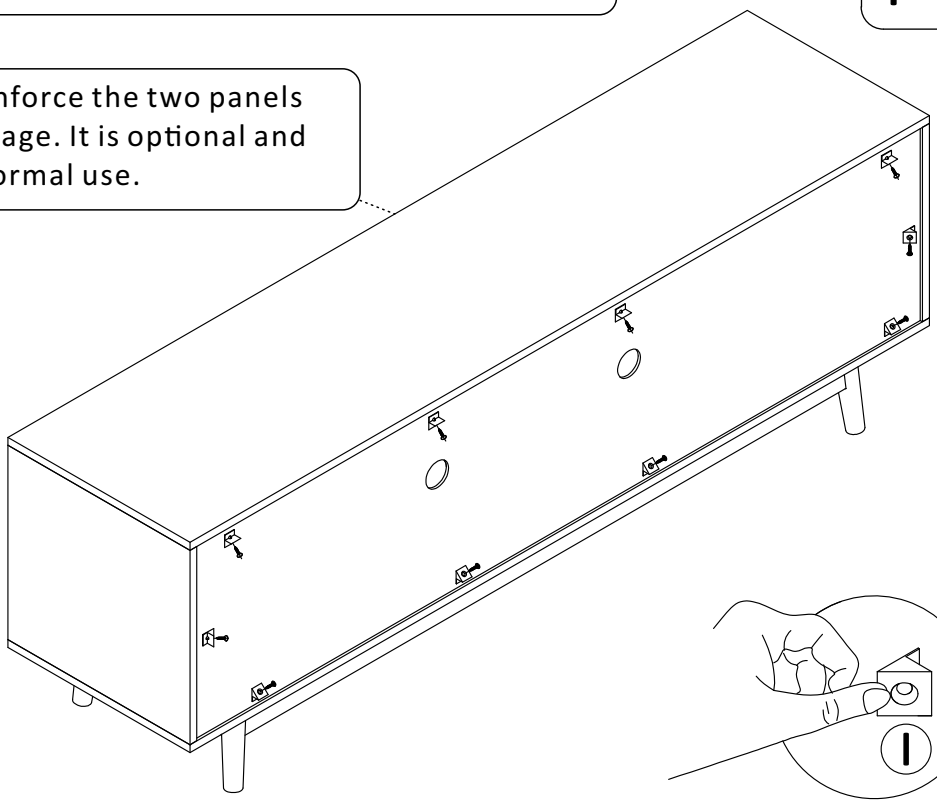

Assembly Completed

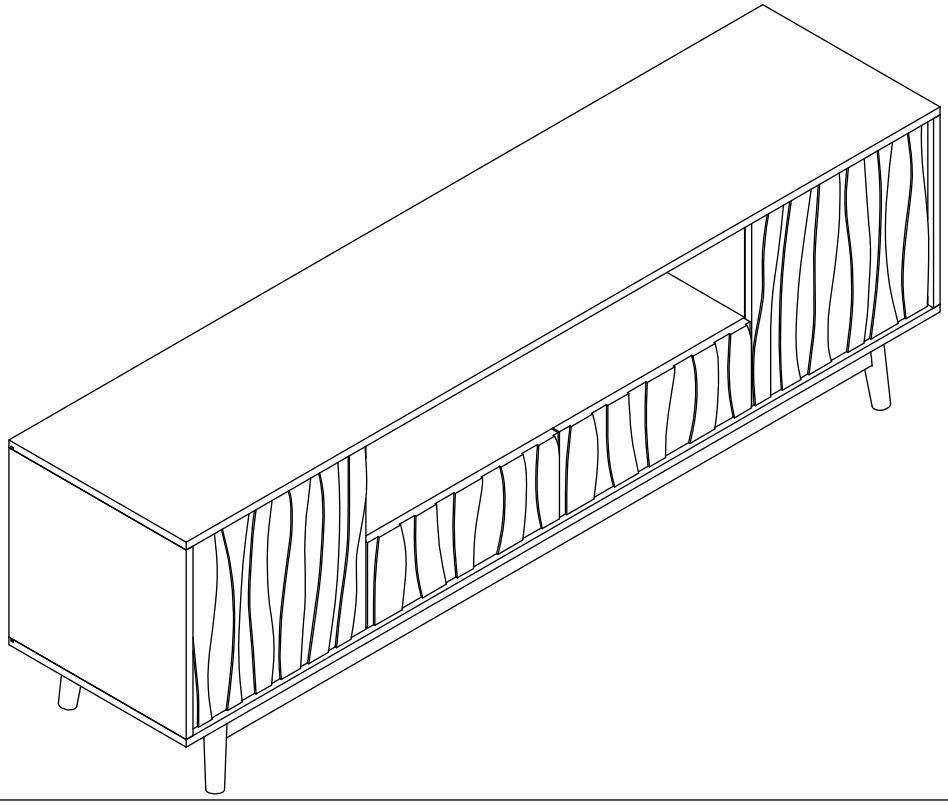

Use and Maintenance

1. Keep the furniture vacant for half a month before use, and maintain good indoor ventilation to eliminate the residual odor in furniture surface coating.

2. Place the objects smoothly, heavier objects should be placed at the bottom (layer) of the furniture to avoid the furniture from tipping over. Heavy objects should not be placed on the top of the wardrobe, so as not to cause the top plate to deform and sag and affect the opening of the cabinet door, high-temperature or frozen objects should be padded with high-termperature-resistant mats and placed on the furniture. Heavier or harder objects should be placed on the furniture table with a soft decorative tablecloth or a felt for protection.

3. Do not push hard objects directly on the furniture to avoid scratching the surface of the furniture.

4. Do not expose the furniture to sunlight for a long time or place the furniture close to the heating equipment, which can cause localized discoloration and fading.

5. Please avoid long-term exposure to humid environment to prevent mildew.

6. Place the furniture stably to avoid breaking the furniture feet or loosening the connection parts due to inclination.

7. Do not let items that are flammable and oxidizing touch the surface of the furniture, which may cause chemical reactions and damage to the furniture finishing.

8. Teach children not to play close to the glass sharp angles of furniture avoid accidental physical injury and damage to the furniture.

9. Open the doors and drawers of the furniture with appropriate force, and it is strictly for bidden to open and close them violently, which will cause loose connections.

10. Screws may become loose during long-term use. If necessary, retighten them to ensure stability and security.

Trouble Shooting

Product Category	Fault	Cause Analysis	Handing Method
Wood furniture	Door opening is not flexible	The furniture is not leveled	Use items to level the furniture
		The door hinges should be adjusted properly.	Adjust door hinges and apply lubricating oil
	Inflexible opening of drawer	Overload or deformation	Reduce weight, adjust guide rails, lubricate
	Loose component connection	Loose hinges or screws	The poke part should be coated with an appropriate amount of 502 glue, then re-install or tighten the screws.
	Minor scratches	Friction with hard or sharp objects	Use a brush to apply similar pigment ink along wood grain to the scratches, then wipe off the excess.
	Corrosive stains	Accidentally stained with chemical solvents such as nail polish, nail polish remover, etc.	Wipe them with a dry cotton cloth immediately

Possible issues during assembly:

- The two boards can't be aligned at the same level.

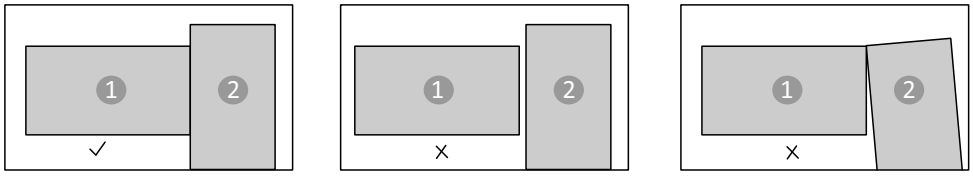

- Holes on the bards and poles are not aligned, so screws can't be installed.

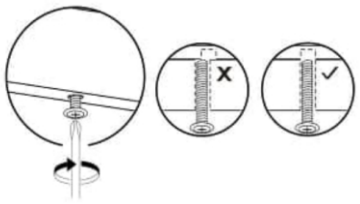

Recommended solution:

- Please sightly loosen all screws and adjust the bards. Because the diameter of the holes on the pipes 23 mm lager than that of bots, the position of the boards can be adjusted.

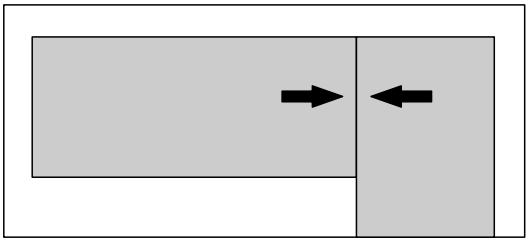

- It is still doesn't work after adjustment, please contact us for more solutions.

Special Accessories Installation Instructions

Hinge Adjustment Diagram

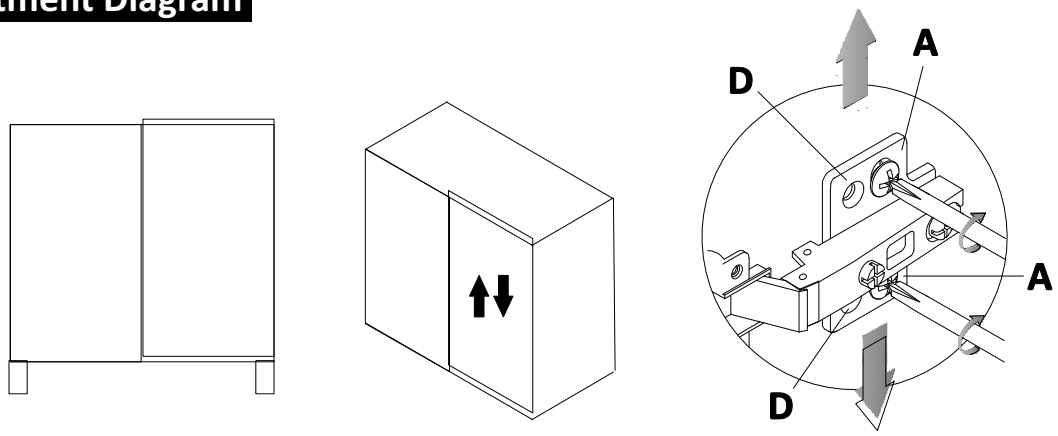

If the two doors are not vertically aligned:

Screw "A" on the hinge is the height adjustment knob. First, remove both screws "D", then loosen screw "A" and adjust the door height as needed. Once the position is correct, tighten screw "A". Adjusting the cabinet door height requires adjusting both the upper and lower hinges simultaneously.

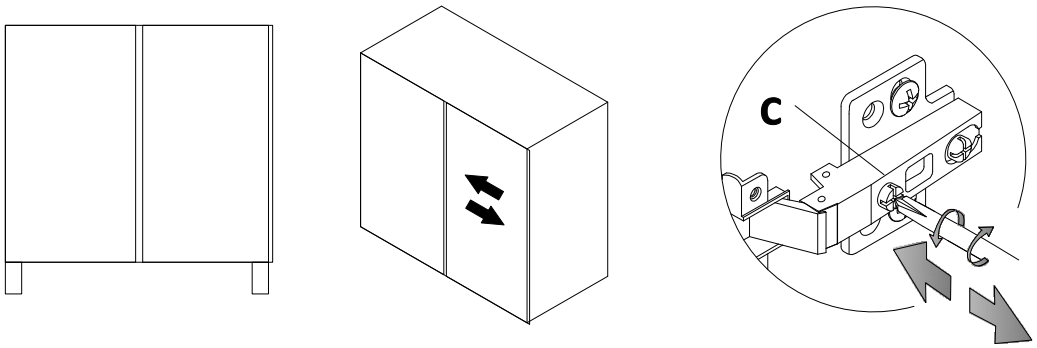

If there are gaps between the doors:

The screw "C" on the inside of the hinge is the left/right adjustment knob. Turning it clockwise will shift the door inwards, and turning it counter-clockwise will shift it outwards. The operation is the same for the upper and lower hinges.

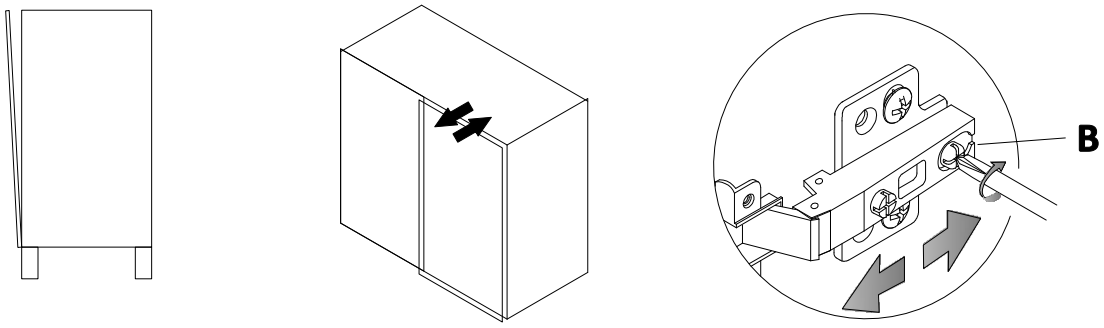

If the door cannot be fully closed:

The screw "B" on the outside of the hinge is the front-to-back adjustment knob. After loosening the screw, slide the cabinet door inwards and outwards to adjust the gap. Once the position is correct, tighten screw "B". The operation is the same for the upper and lower hinges.

After-Sales Warranty

Dear Customer,

Thank you for purchasing this TV Cabinet. If you find that the product is damaged or accessories are missing after receiving it, please contact us through our after-sales email. Our customer support team will provide you with a professional solution within 24 hours.

After-sales email: ATJafurn@outlook.com

If you encounter any problems with the product, accessories, installation, or damage after receiving your package, you can also scan this QR code to submit your issue and relevant pictures. This will allow us to quickly understand your difficulties and provide prompt replacement parts and professional guidance. We look forward to receiving any feedback from you!