Installation Guide

Please go to our website for product cleaning tips. Go to the **Care + Maintenance** selection.
Tools Required: Flathead screwdriver, Phillips screwdriver, pliers, gloves, safety glasses, marking pen, 1/8" drill bit and drill.
Estimated Assembly Time: 20-30 minutes
Preparation: Identify and inspect all parts before beginning installation. Check package content list and diagrams below to be sure all parts are present. If any parts are missing or damaged, do not attempt to assemble, install, or operate the mirror. Contact your original place of purchase.

⚠ Warnings and Cautions

These instructions are provided for your safety. It is very important you read them completely before installing the mirror.

Package Contents

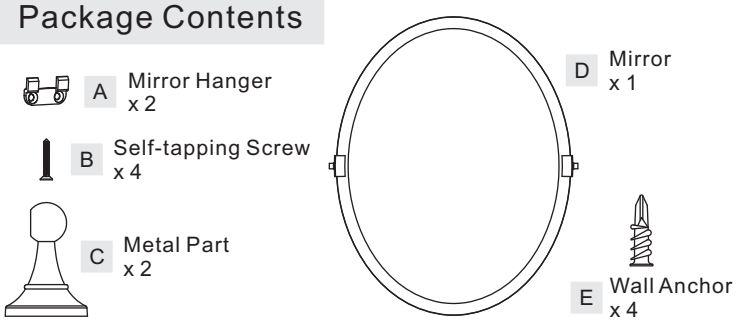

Step 1 – Identify Self-tapping Screws Locations for mounting the Mirror Hangers By Using Template

The template included with package is provided to assist you in placing the mirror in the location you desire. The template is a full size drawing of your mirror and includes hanger mounting locations that your mirror maybe hung.

Place the template on the wall in the location you have selected for your mirror. Once you have the template in the location you desire and making sure it is level you may tape or pin the template to the wall. Now you may mark the holes for the mounting hardware as indicated on your template. You may mark the mounting hardware location by either using a pin and pushing it through the template leaving a small hole on the wall. Or you may use a pencil and place a mark on the wall through a small hole you cut into the template at the correct mounting location.

Remove the template from the wall and install the Mirror Hangers.

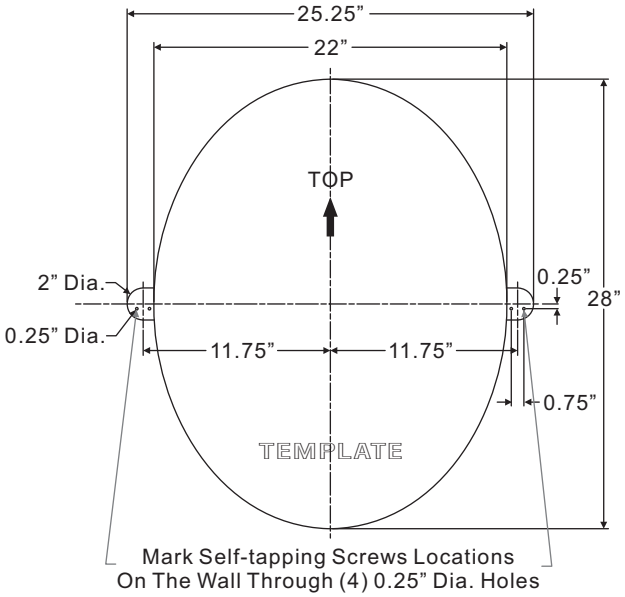

Figure 1

STEP 2 – Installing the 2 Mirror Hangers

A. Using a 1/8" drill bit, drill holes at each (4) locations marked on the wall surface.
B. Insert Wall Anchors (E) into drilled holes completely.
C. Using Self-tapping Screws (B) provided with the Mirror Hangers (A) attach the 2 Mirror Hangers (A) to Wall Anchors (E).

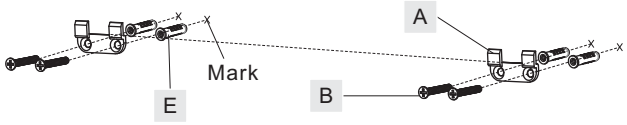

Figure 2

STEP 3 – Hanging the Mirror

A. Attach Metal Parts (C) onto axles on the sides of the Mirror (D) with the cap end of Metal Part (C) against Mirror Hangers (A). By holding Metal Parts (C) with Mirror (D) to hang the Mirror (D) to Mirror Hangers (A) on the wall.

Clean glass with household glass cleaner. Retain this sheet for future reference.

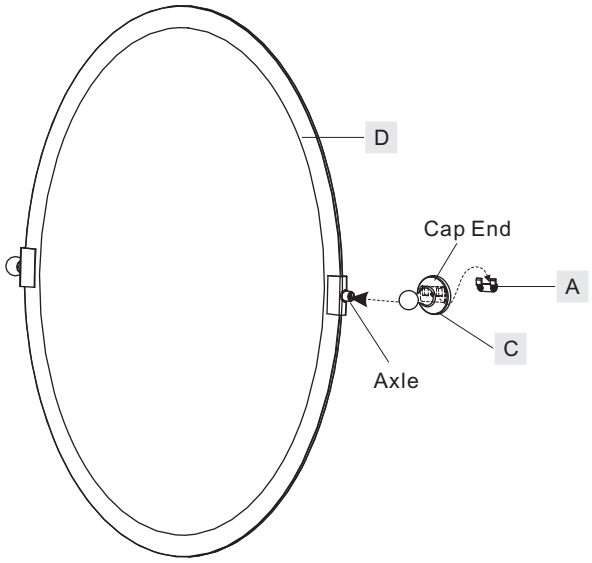

Figure 3

NOTE: ALL DIMENSIONS ARE ROUNDED UP TO THE NEAREST 1/4″
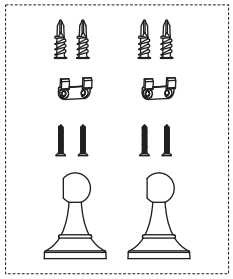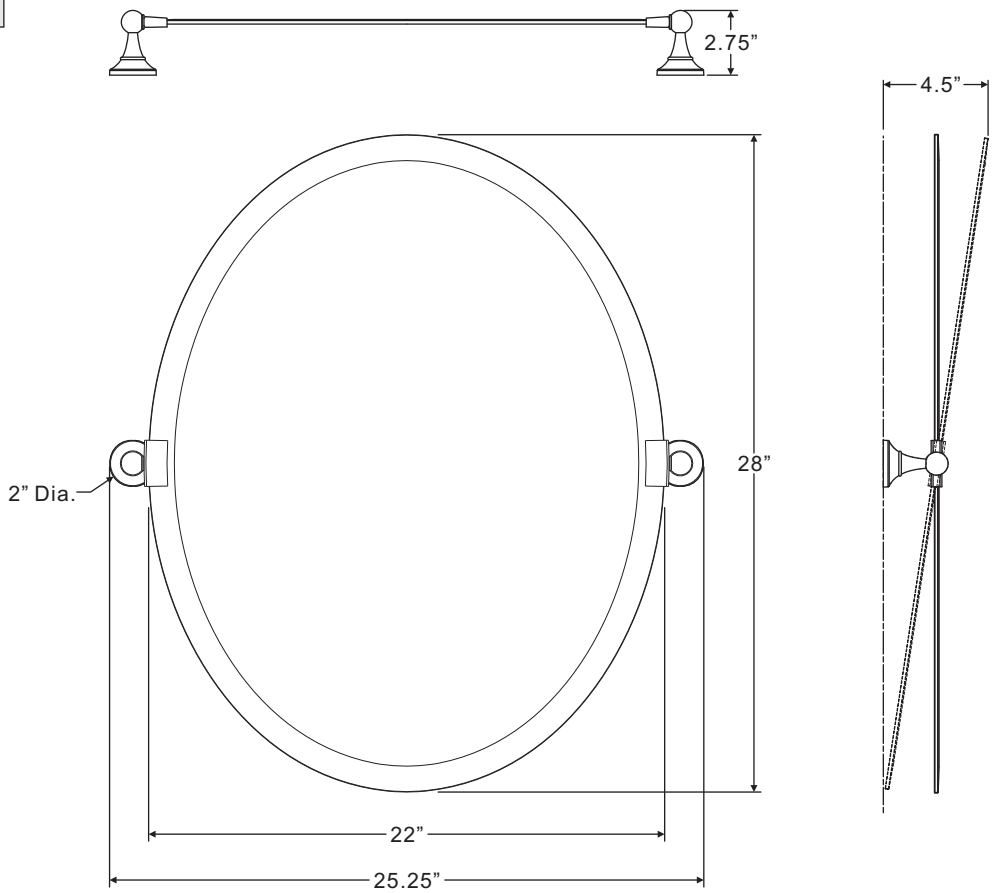
FINISH: BRUSHED NICKEL