# NFIO30ROAKWT

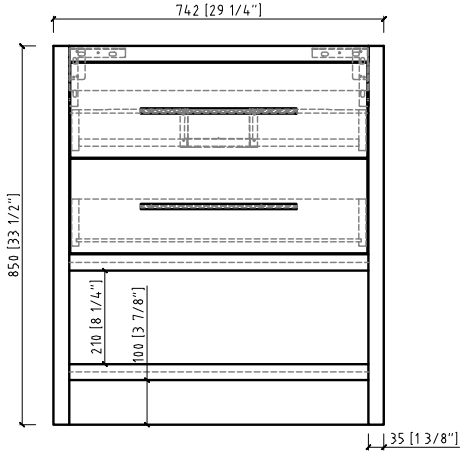


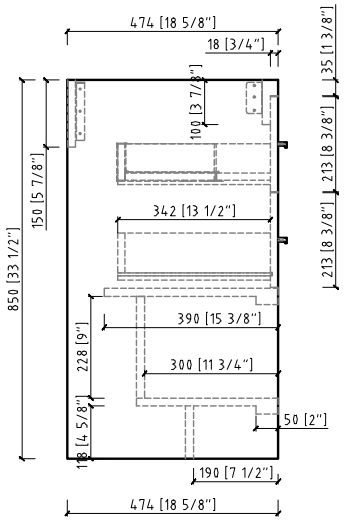


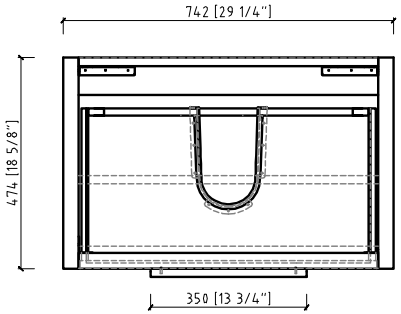


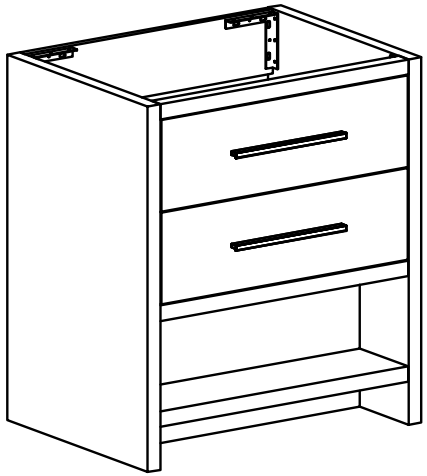

SERA BATHROOM DESIGNS
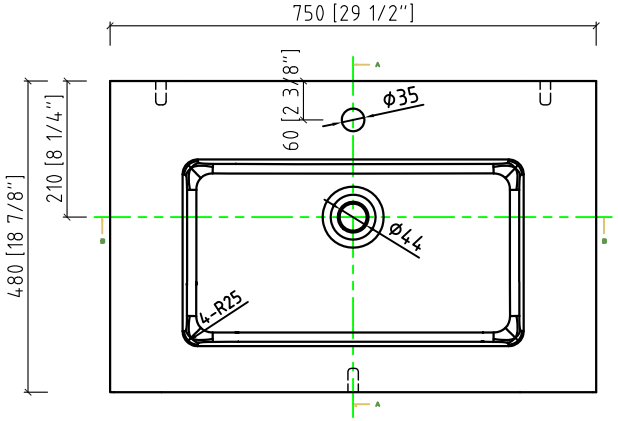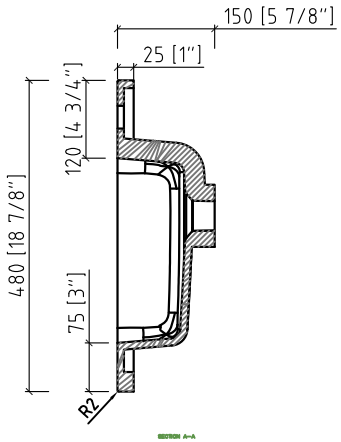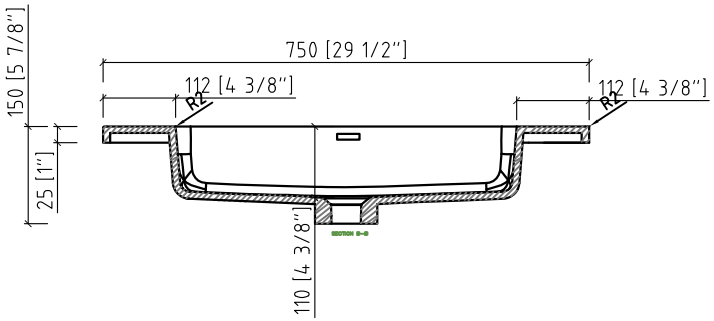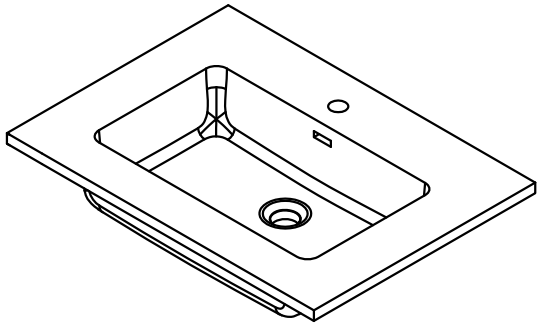
# NFIO30ROAKWT