ASSEMBLY INSTRUCTION

If you have any problems with installation, use or customer service, please contact our customer

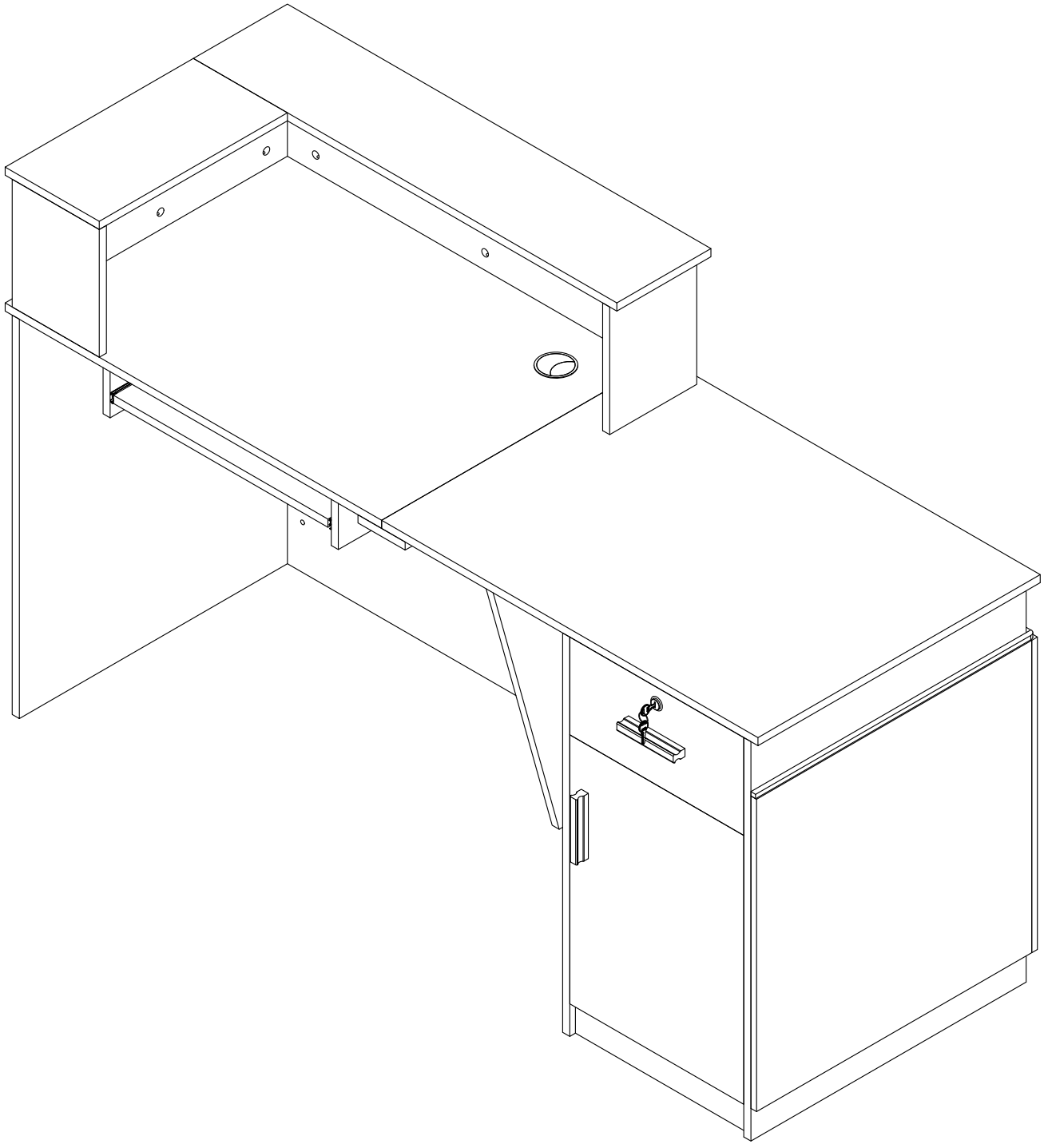

ASSEMBLY INSTRUCTION

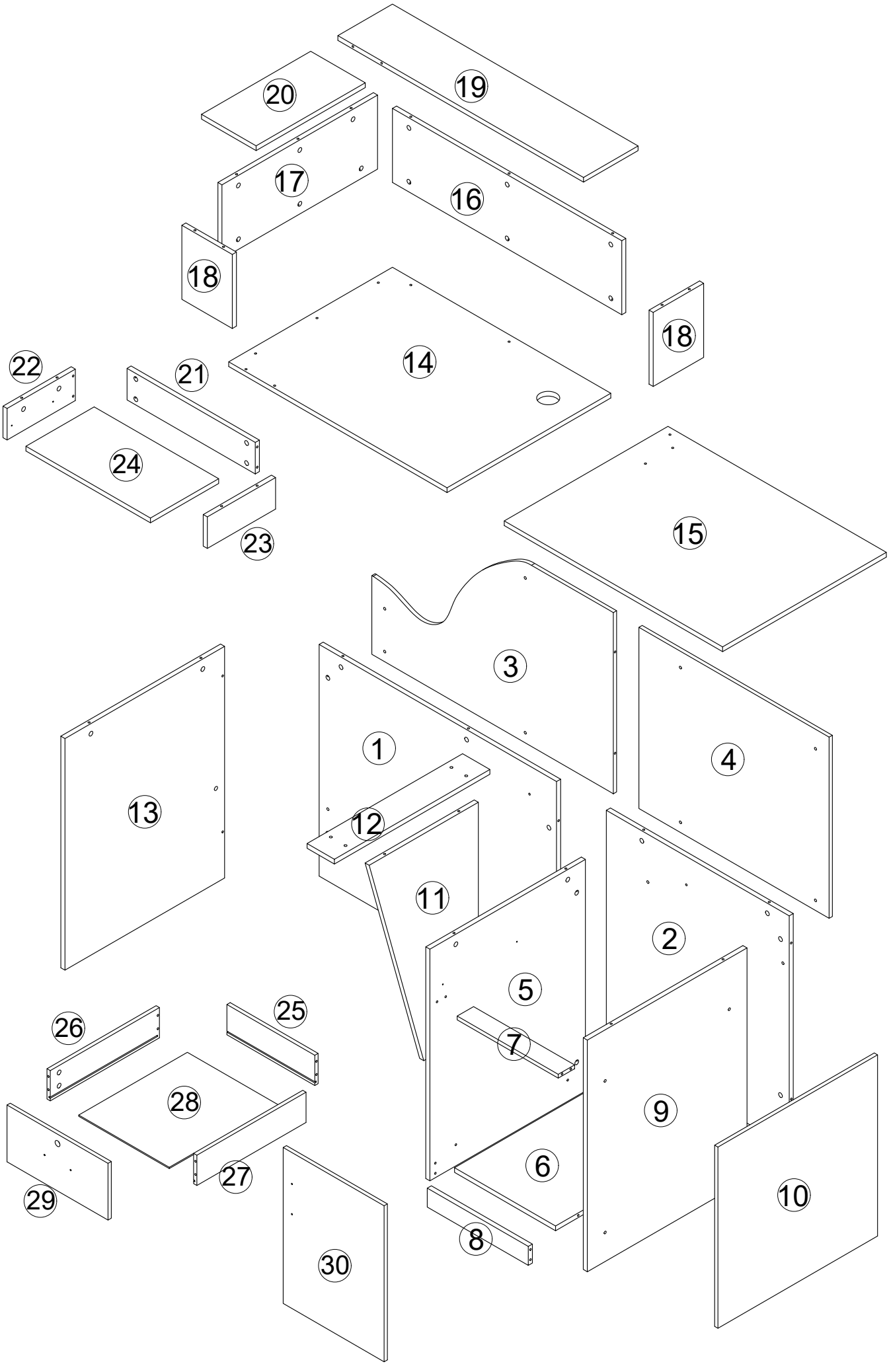

ASSEMBLY INSTRUCTION

① 1PC 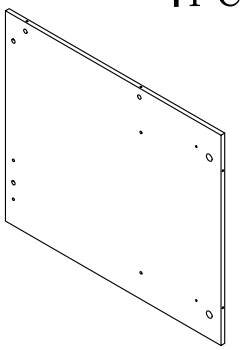	② 1PC 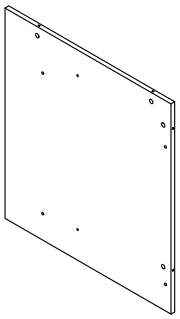	③ 1PC 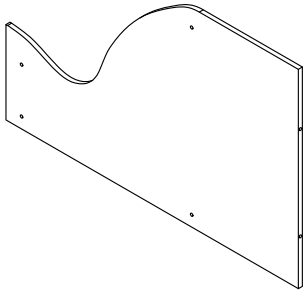	④ 1PC 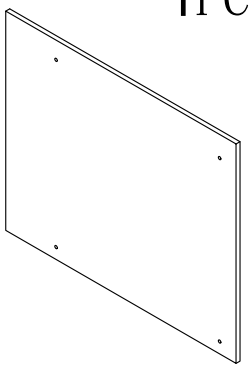
⑤ 1PC 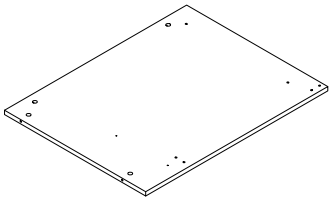	⑥ 1PC 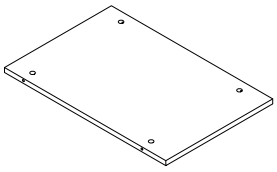	⑦ 1PC 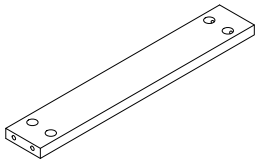	⑧ 1PC 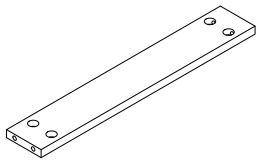
⑨ 1PC 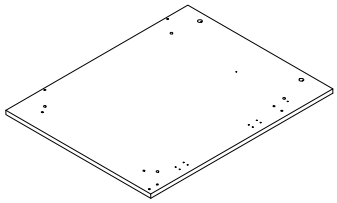	⑩ 1PC 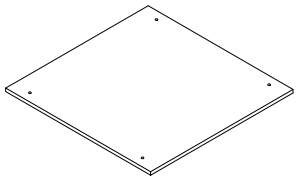	⑪ 1PC 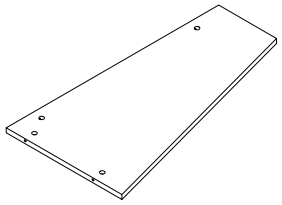	⑫ 1PC 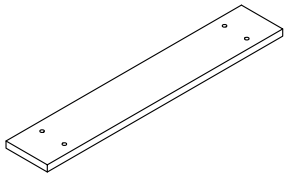
⑬ 1PC 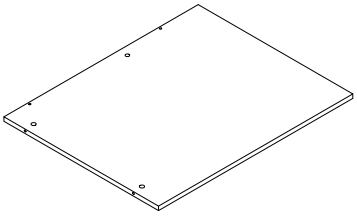	⑭ 1PC 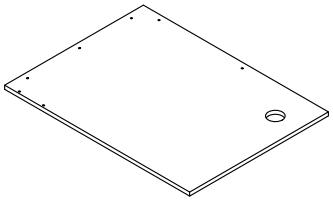	⑮ 1PC 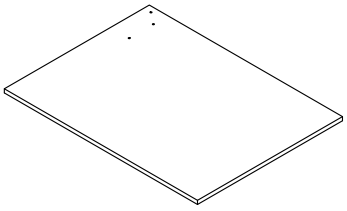	⑯ 1PC 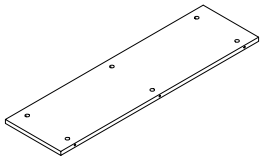
⑰ 1PC 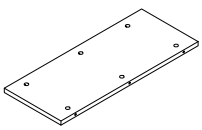	⑱ 2PC 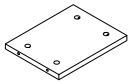	⑲ 1PC 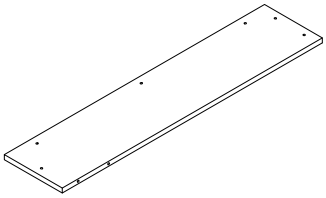	⑳ 1PC 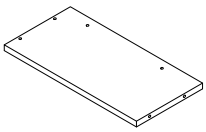

ASSEMBLY INSTRUCTION

21 1PC 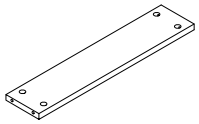	22 1PC 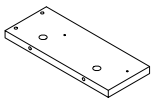	23 1PC 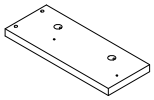	24 1PC 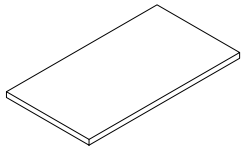
25 1PC 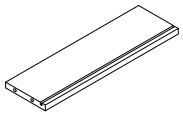	26 1PC 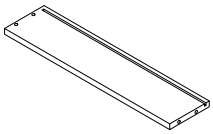	27 1PC 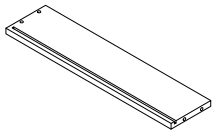	28 1PC 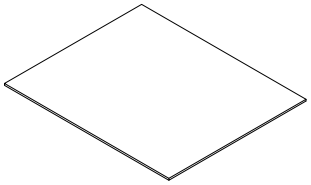
29 1PC 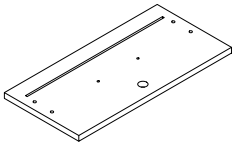	30 1PC 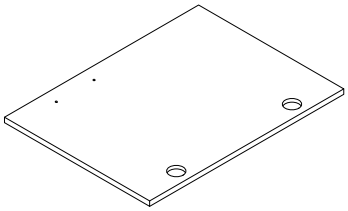		

ASSEMBLY INSTRUCTION

A x 70PCS 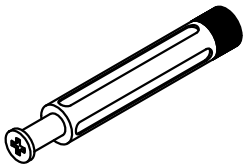 M6*40mm	B x 70PCS 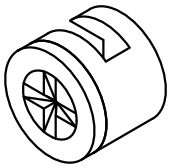 ø15*9mm	C x 2PCS 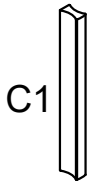 96#  M4*14mm	D x 2PCS 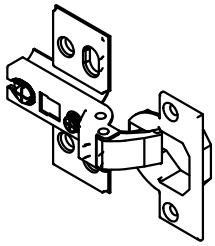
E x 16PCS 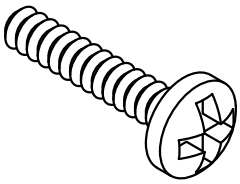 M6*20mm	F x 12PCS  M4*14mm	G x 16PCS  M3.5*12mm	H x 1PCS 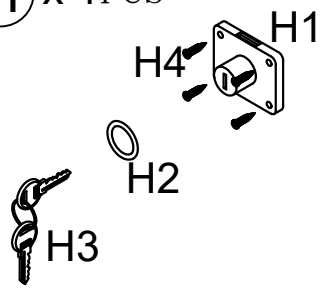 4PCS M4*16mm
I x 1PCS 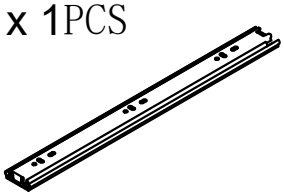 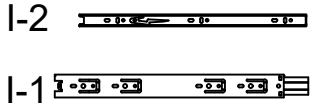 14″	J x 1PCS 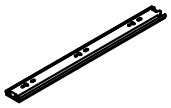 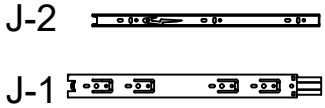 8″	K x 1PCS  ϕ50	L x 6PCS 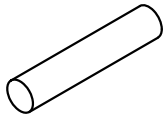 M6*30mm
M x 54PCS 	N x 1PCS 		

ASSEMBLY INSTRUCTION

Step1

I x 1
J x 1

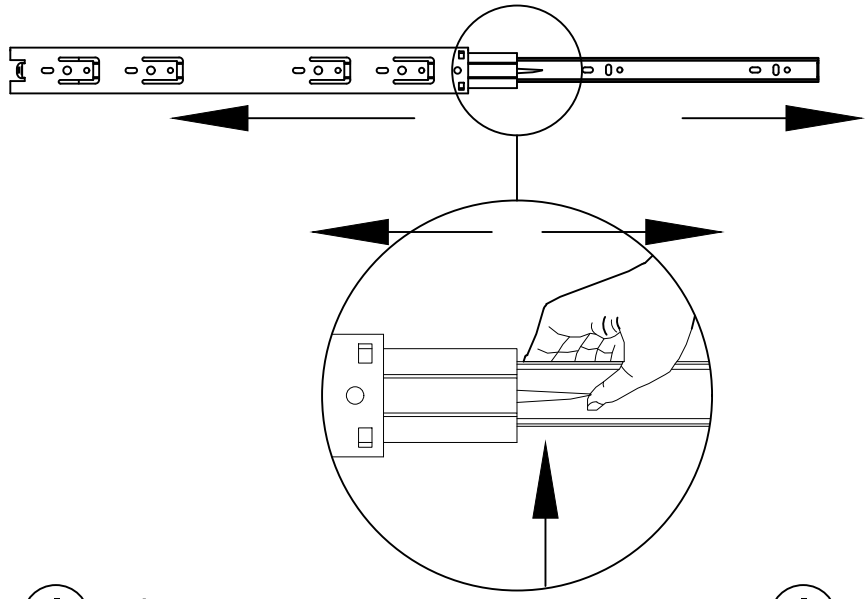

I x 1PCS

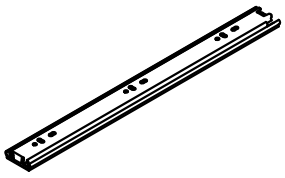

14″

J x 1PCS

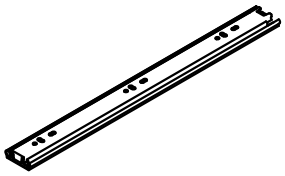

8″

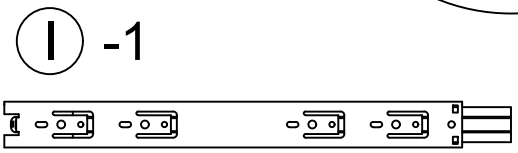

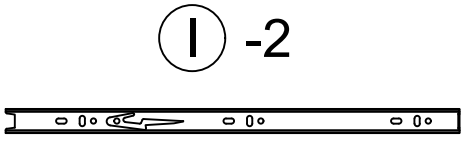

Step2

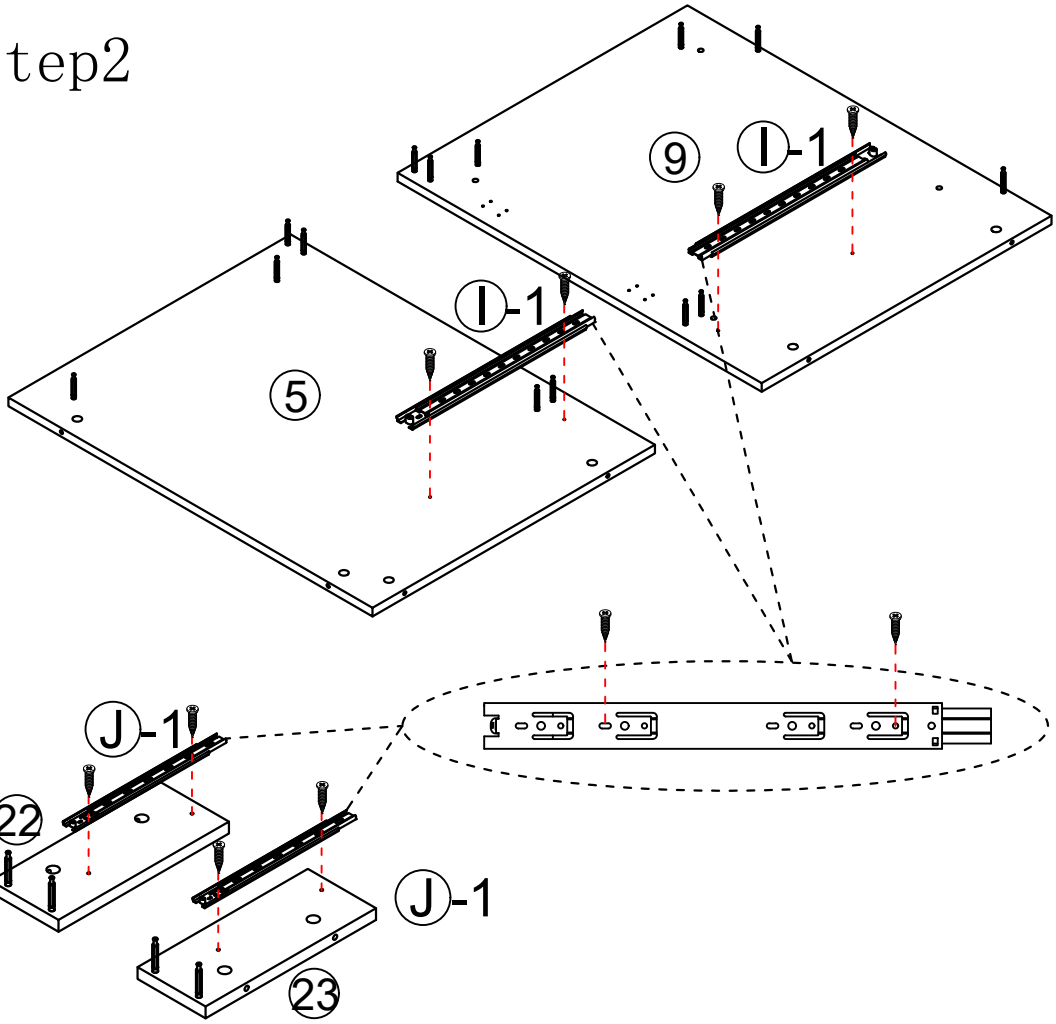

I x 1PCS

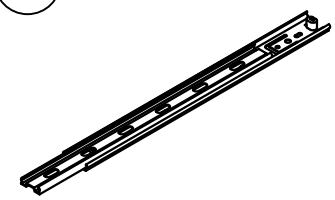

14″

J x 1PCS

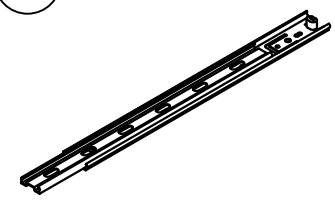

8″

G x 8PCS



ASSEMBLY INSTRUCTION

Step3

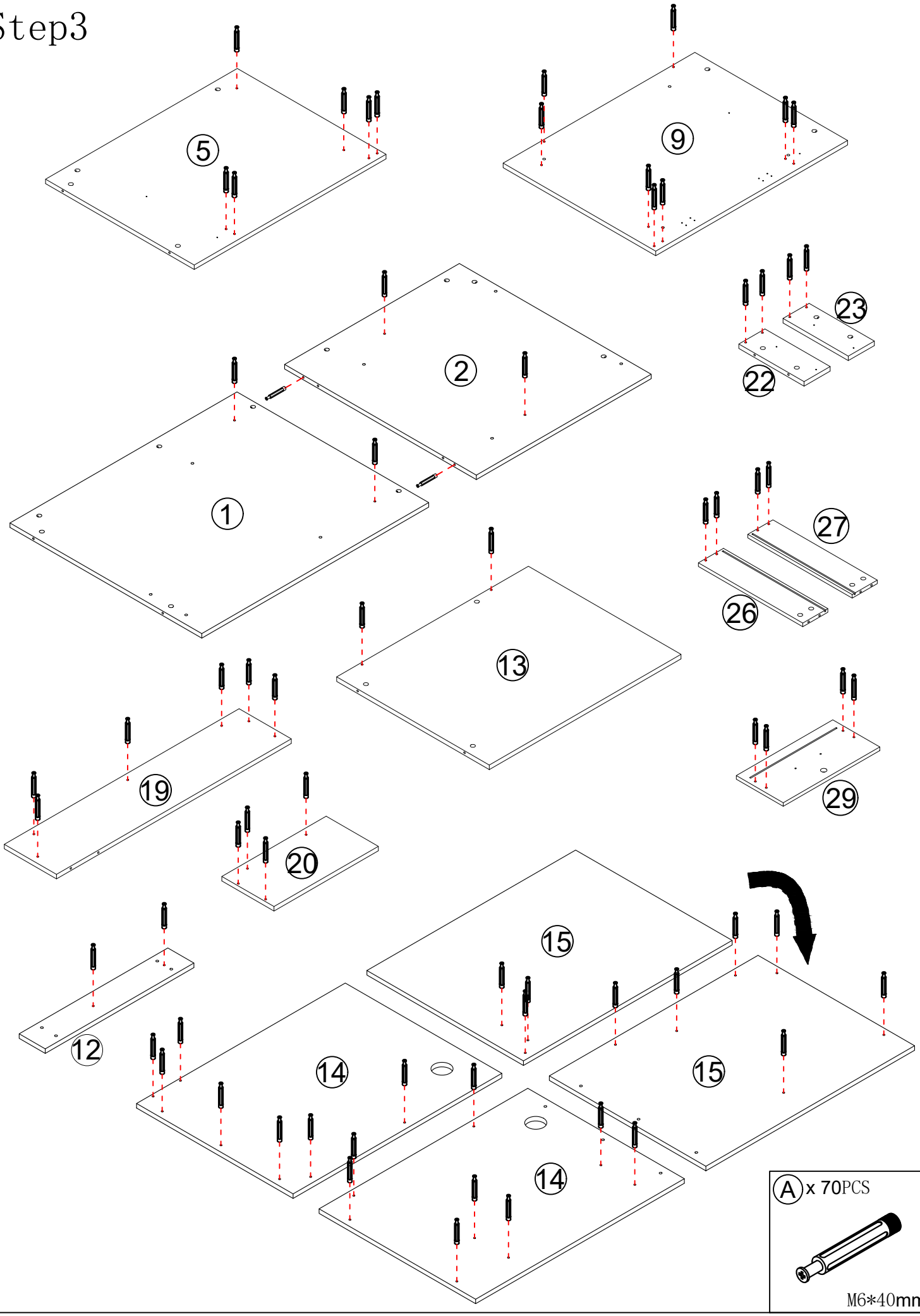

ASSEMBLY INSTRUCTION

Step4

L x 2PCS

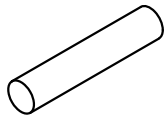

M6*30mm

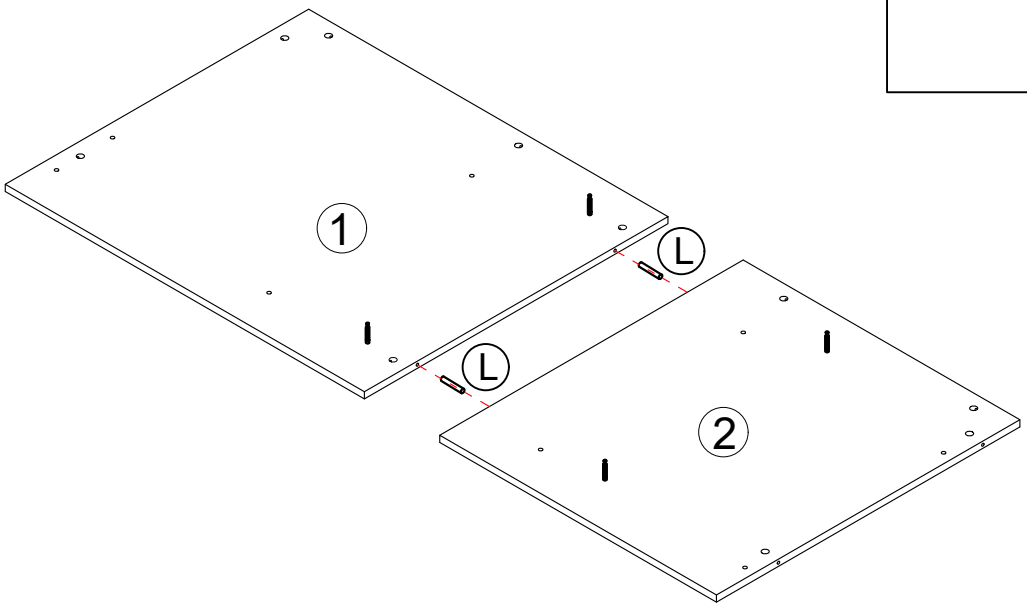

Step5

L x 2PCS

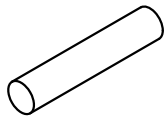

M6*30mm

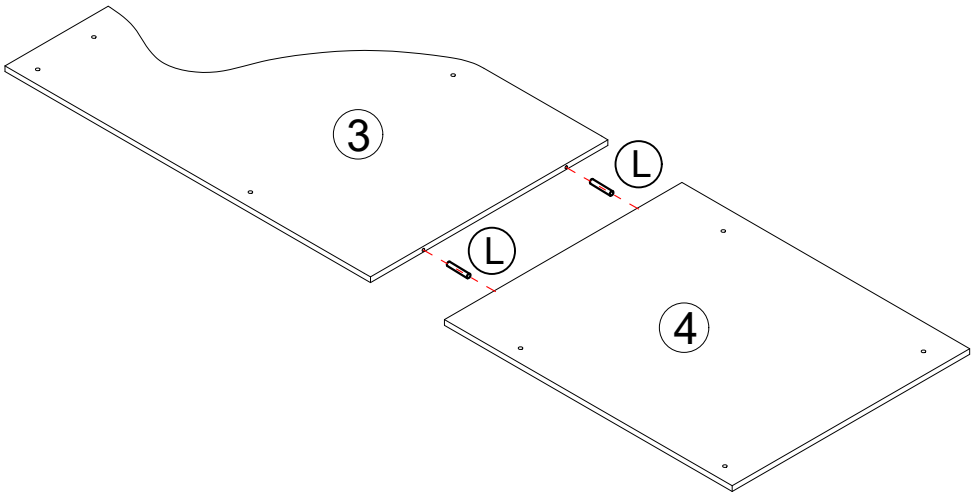

ASSEMBLY INSTRUCTION

Step6

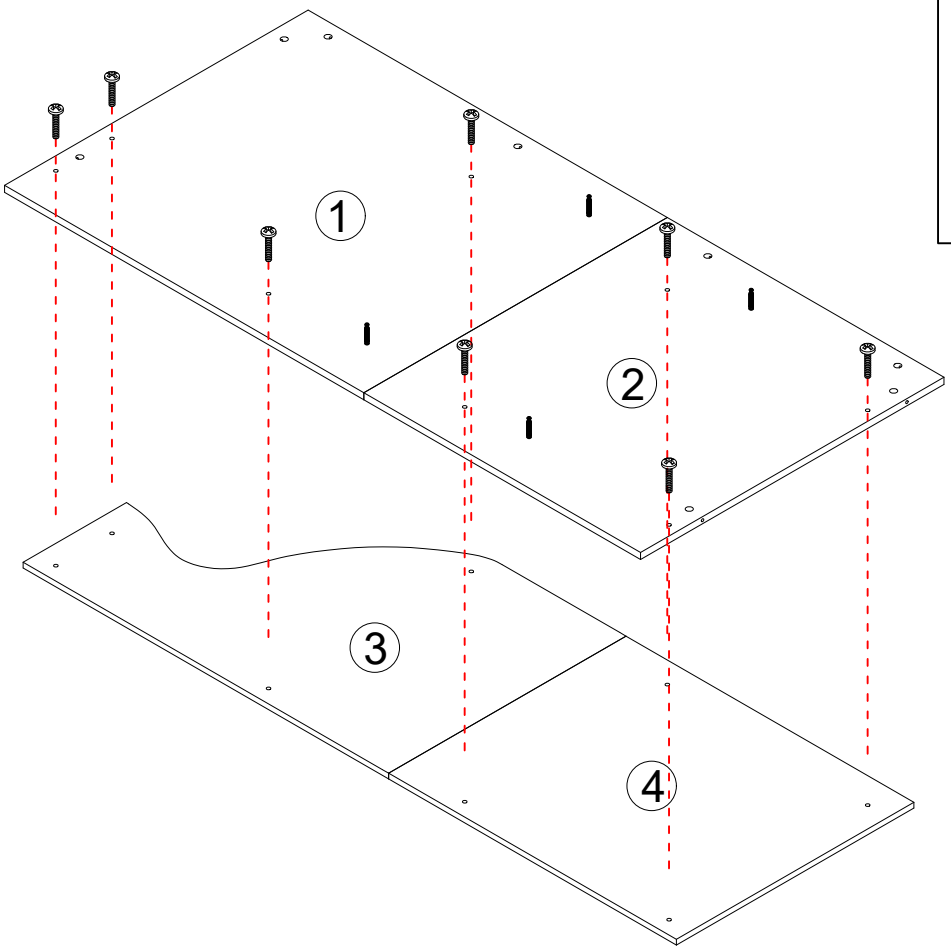

E x 8PCS

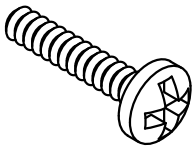

M6*20mm

Step7

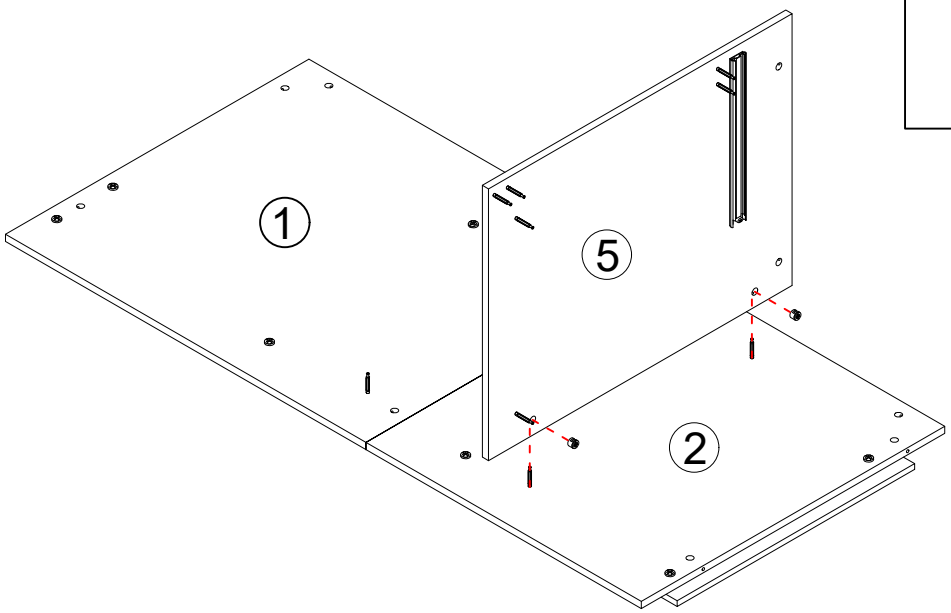

B x 2PCS

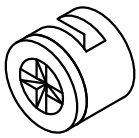

ø15*9mm

ASSEMBLY INSTRUCTION

Step8

Ⓑ x 2PCS

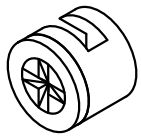

ø15*9mm

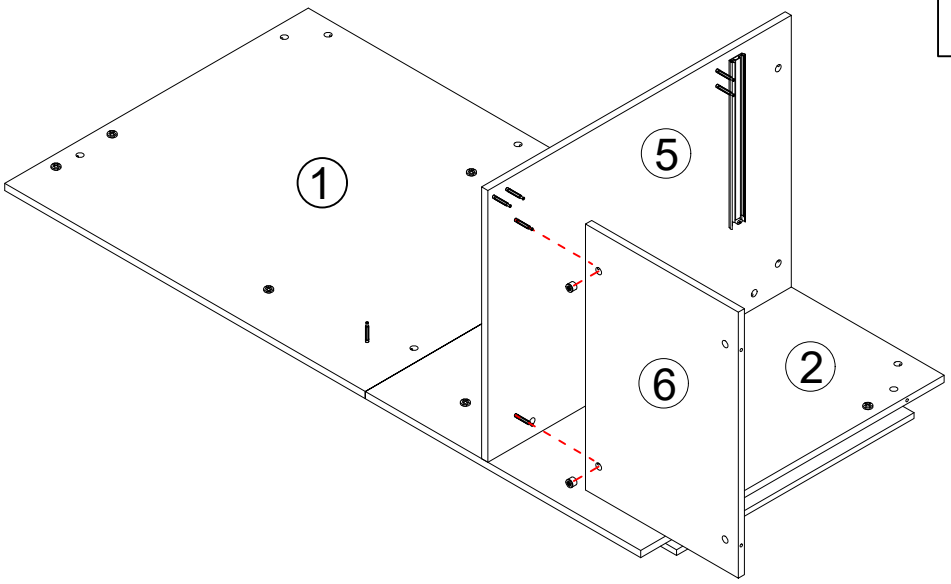

Step9

Ⓑ x 2PCS

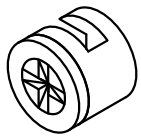

ø15*9mm

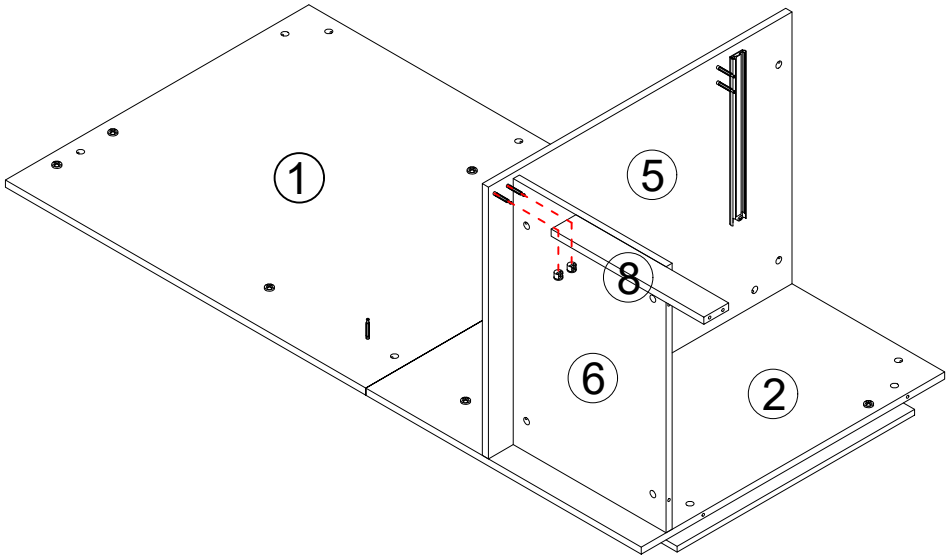

ASSEMBLY INSTRUCTION

Step10

Ⓑ x 2PCS

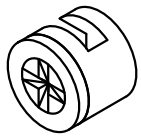

ø15*9mm

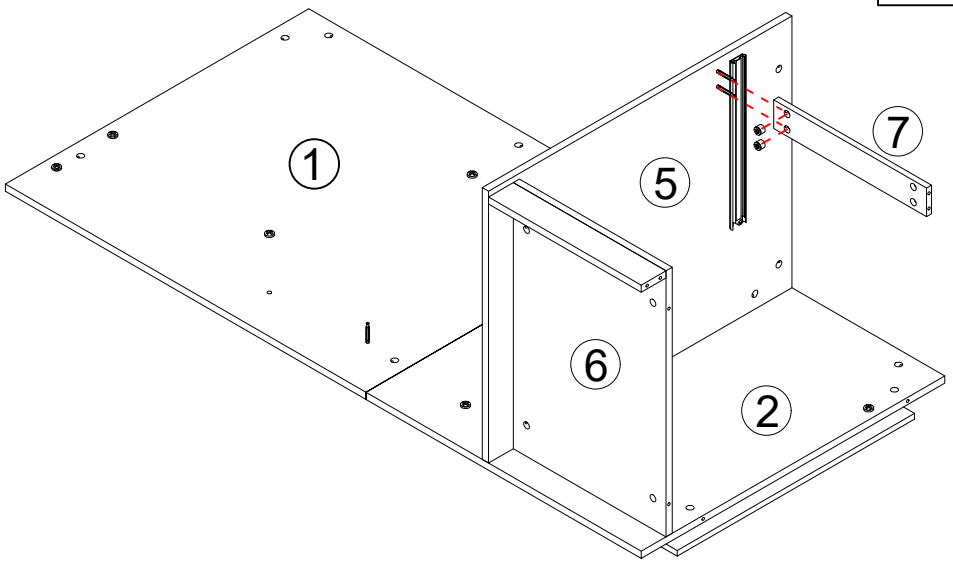

Step11

Ⓔ x 4PCS

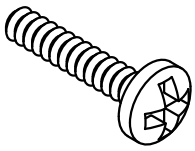

M6*20mm

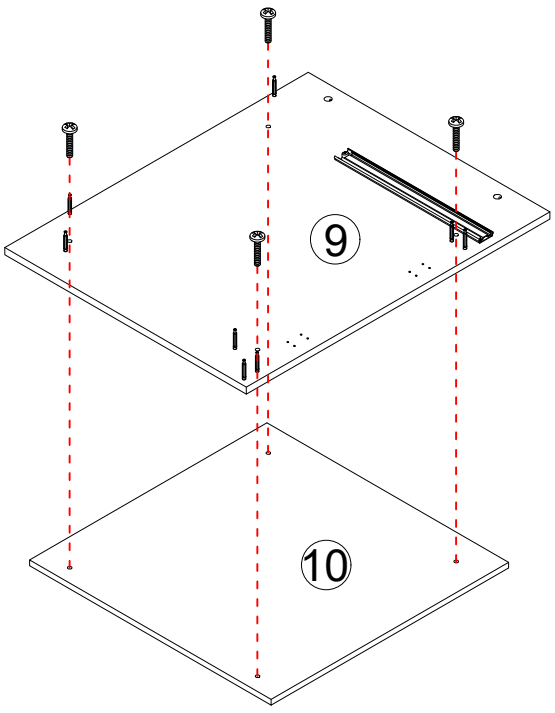

ASSEMBLY INSTRUCTION

Step12

Ⓑ x 8PCS

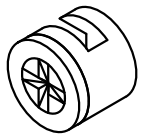

ø15*9mm

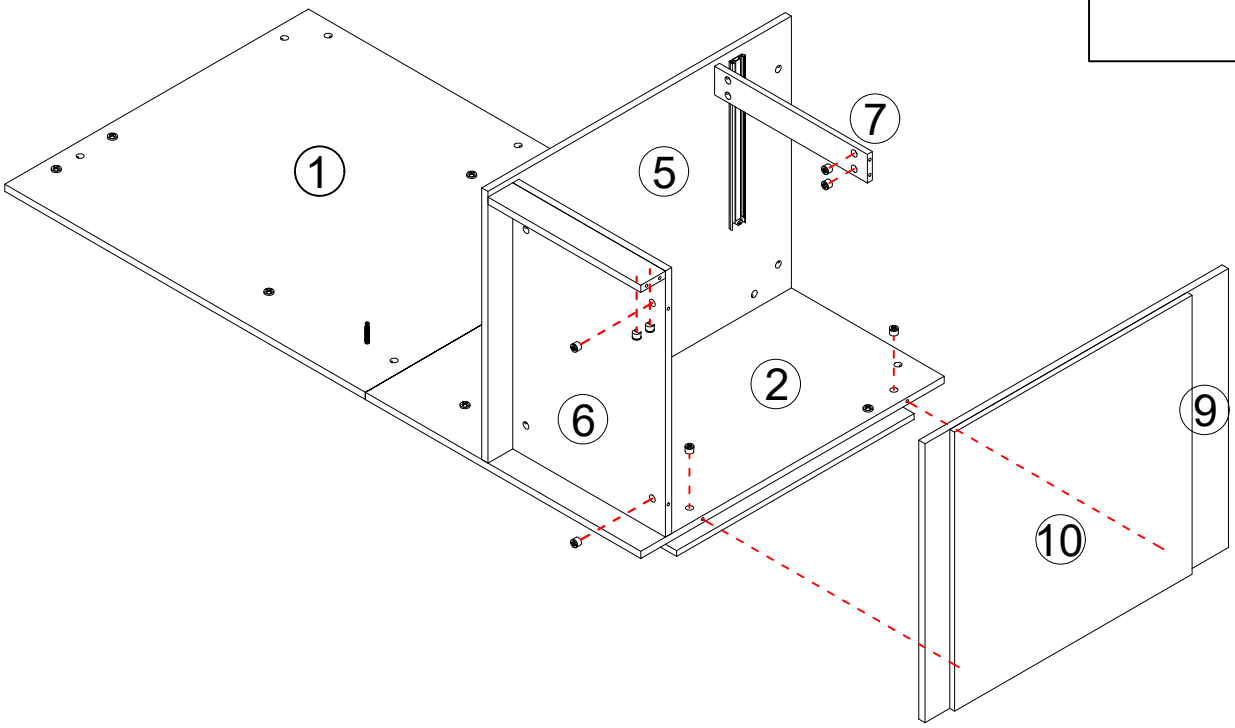

Step13

Ⓑ x 2PCS

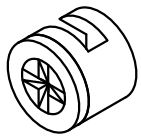

ø15*9mm

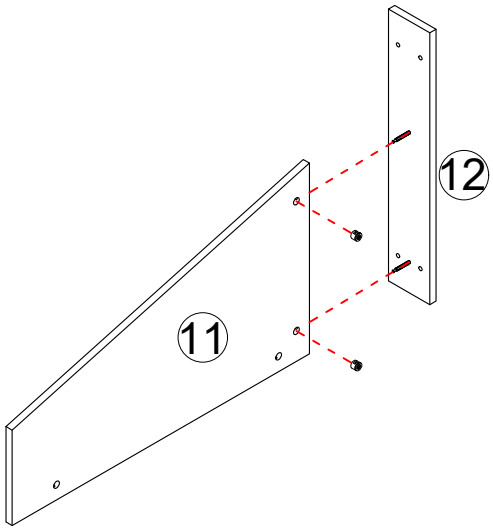

ASSEMBLY INSTRUCTION

Step14

B x 2PCS

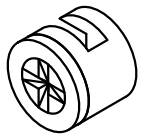

ø15*9mm

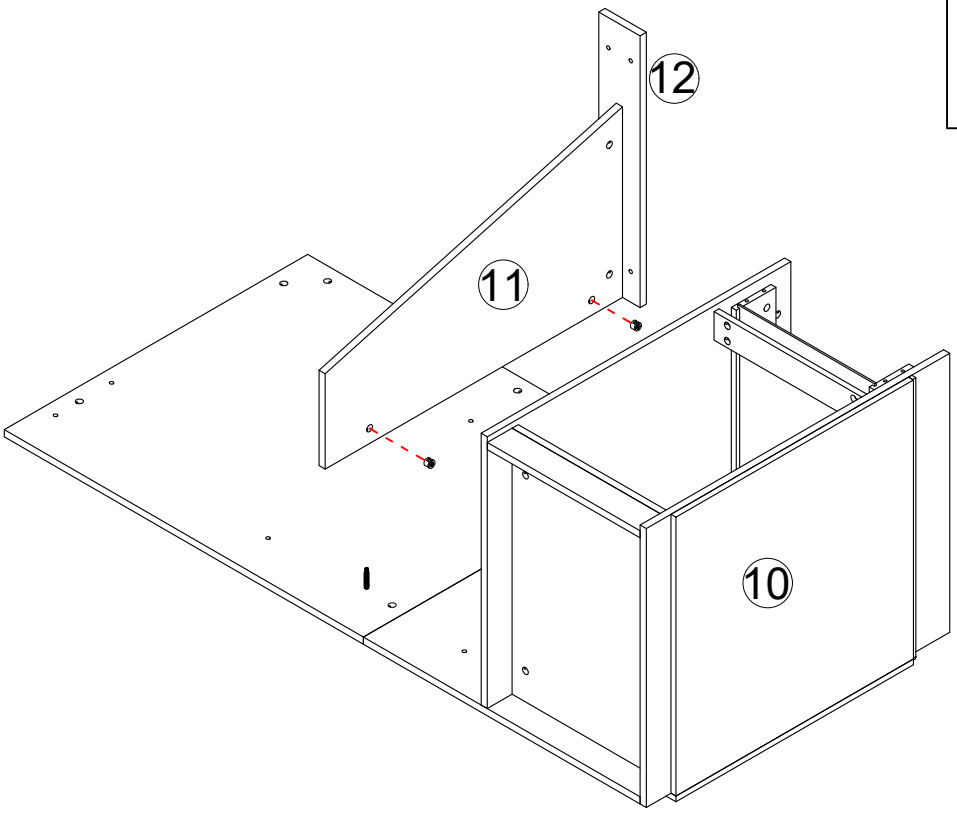

Step15

B x 2PCS

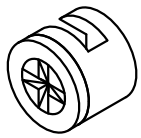

ø15*9mm

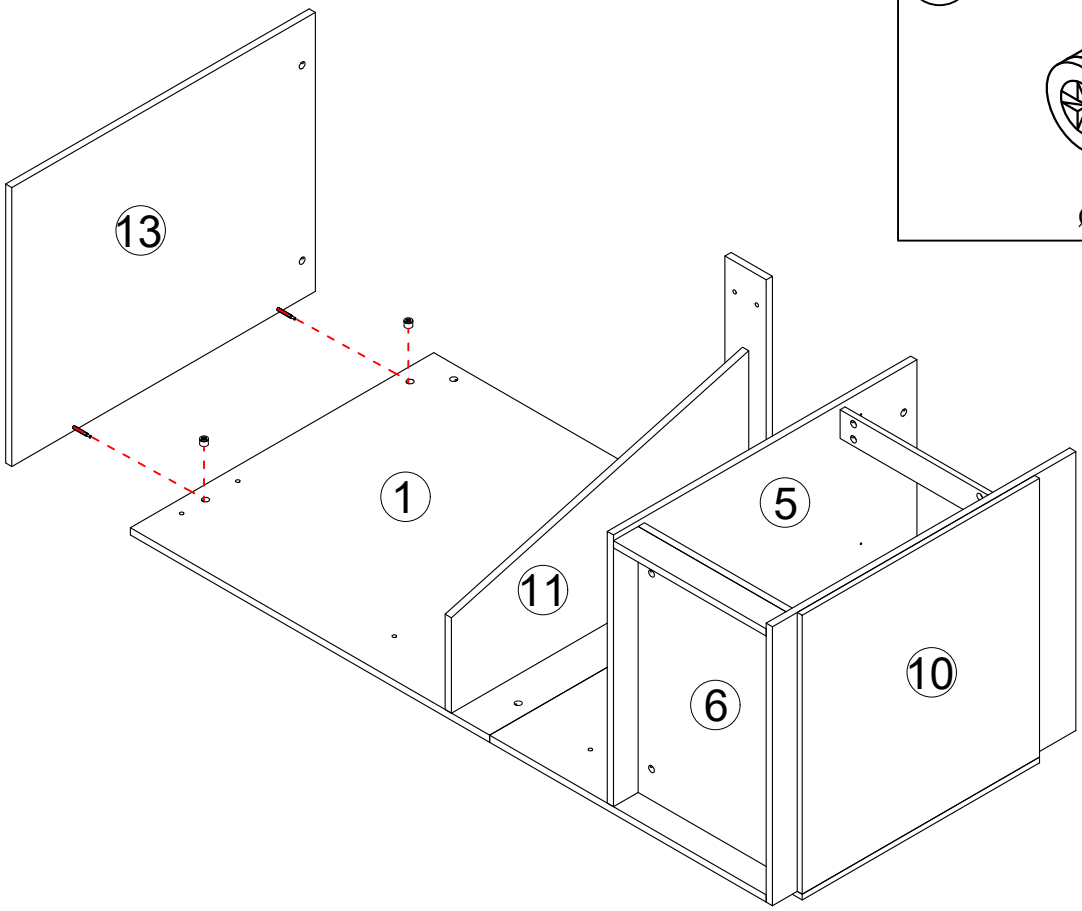

ASSEMBLY INSTRUCTION

Step16

Ⓑ x 8PCS

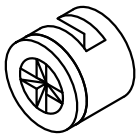

ø15*9mm

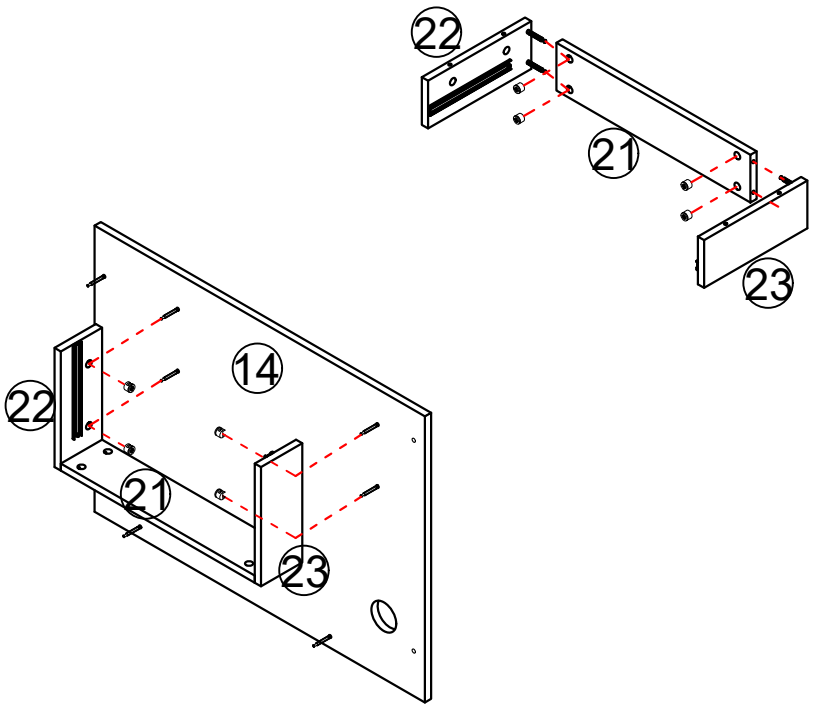

Step17

Ⓑ x 4PCS



ø15*9mm

Ⓔ x 4PCS

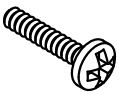

M6*20mm

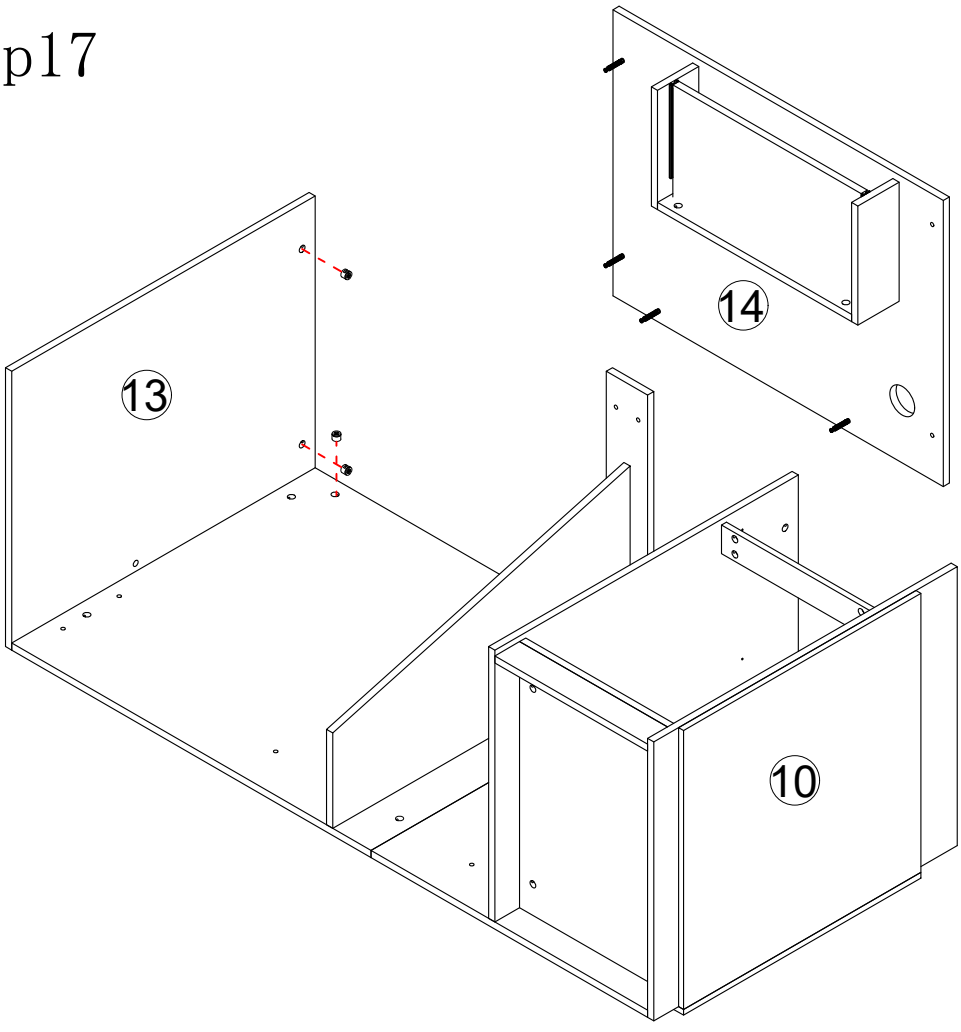

ASSEMBLY INSTRUCTION

Step18

Ⓑ x 6PCS



ø15*9mm

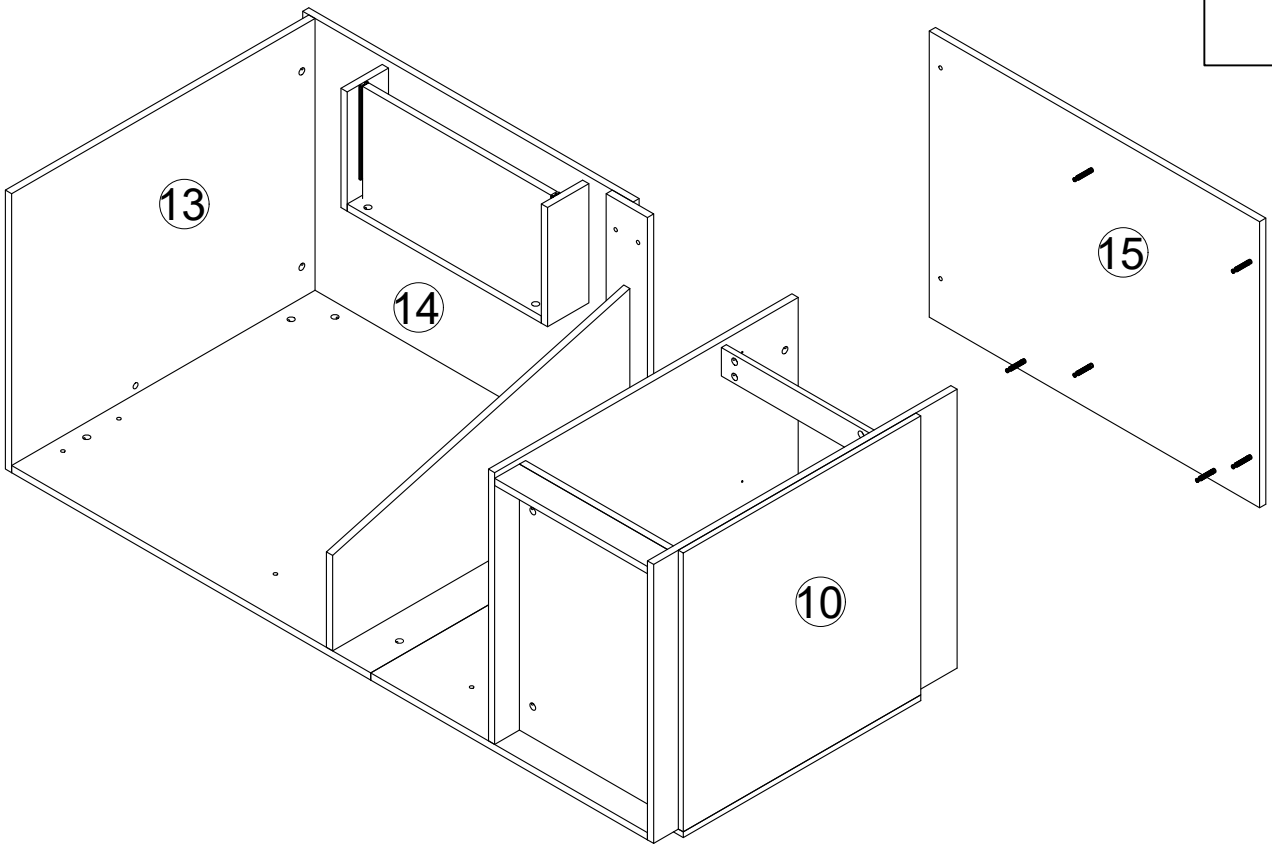

Step19

Ⓔ x 4PCS

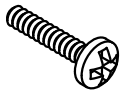

M6*20mm

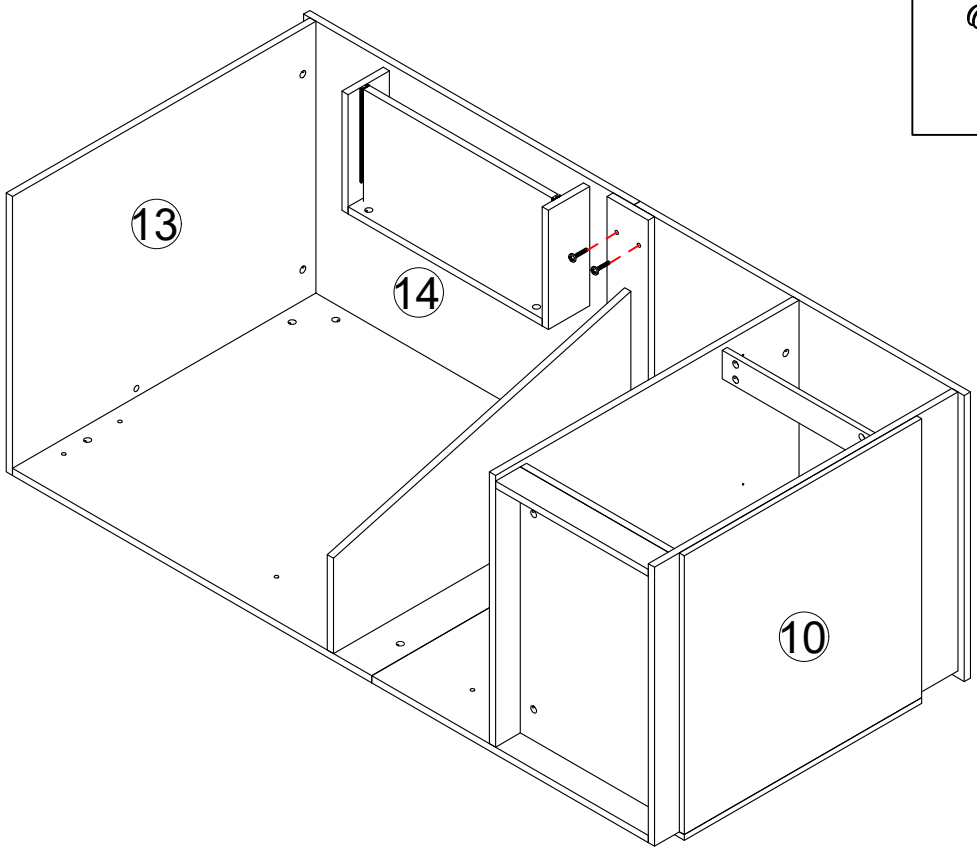

ASSEMBLY INSTRUCTION

Step20

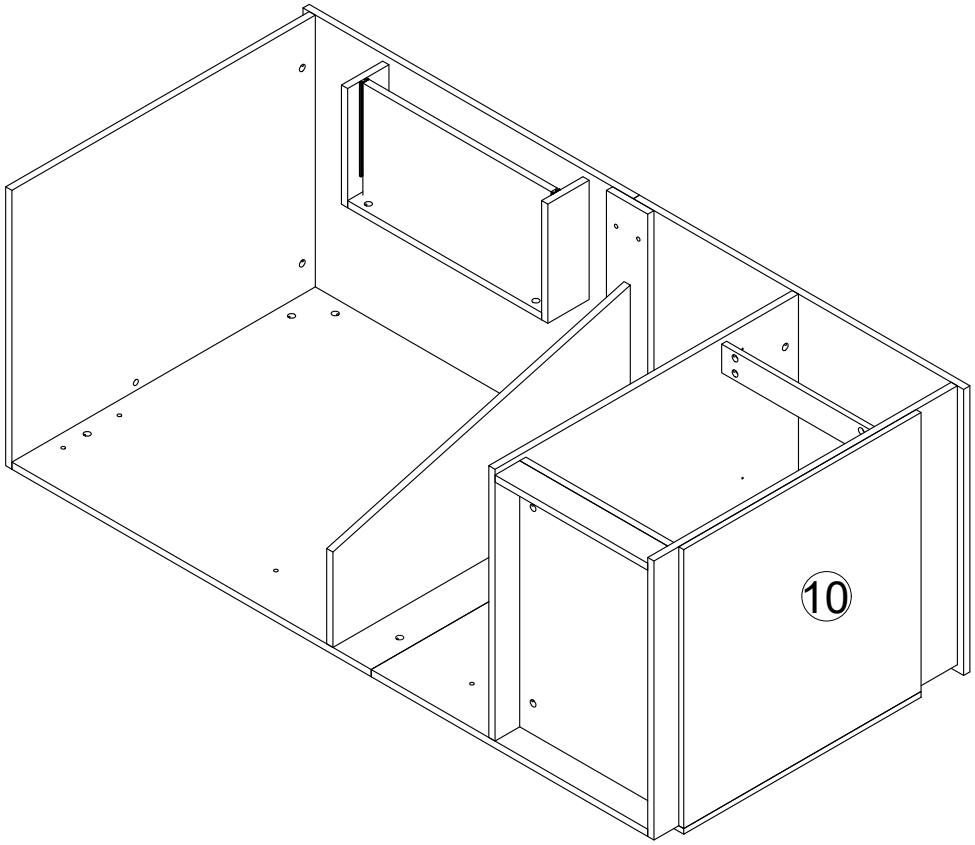

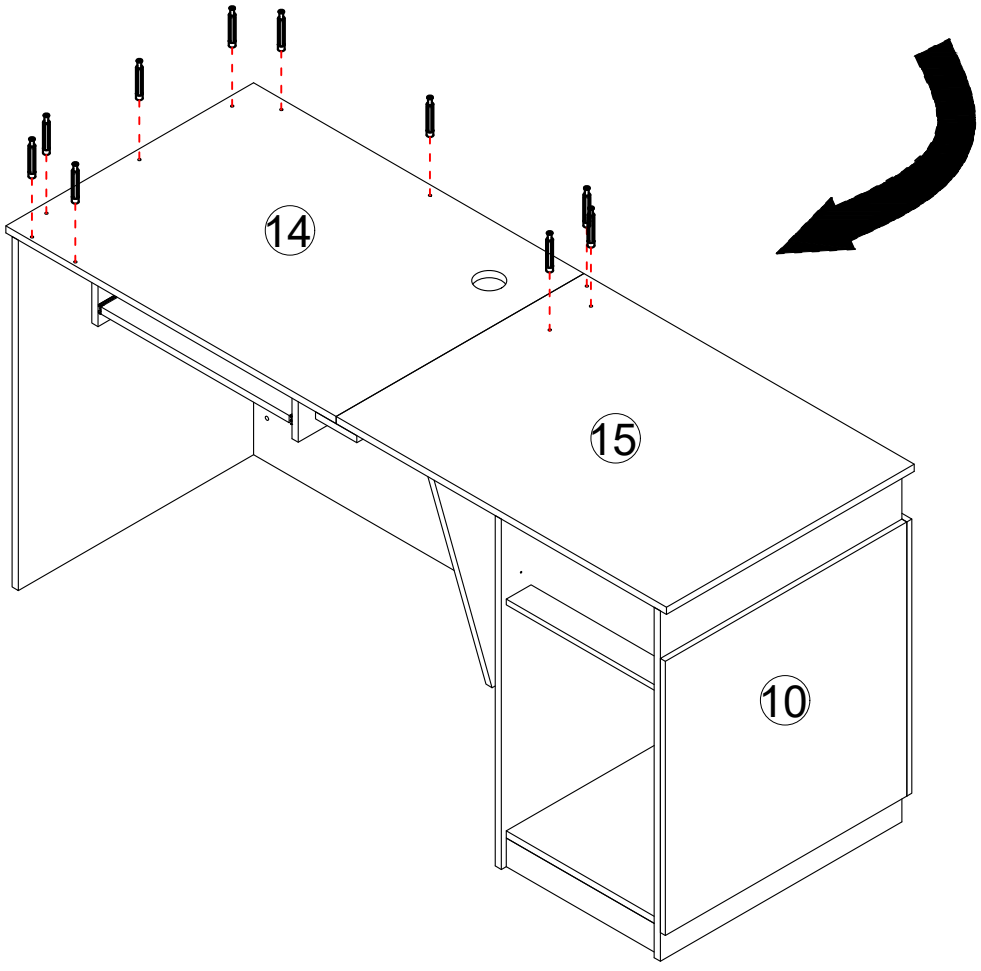

ASSEMBLY INSTRUCTION

Step21

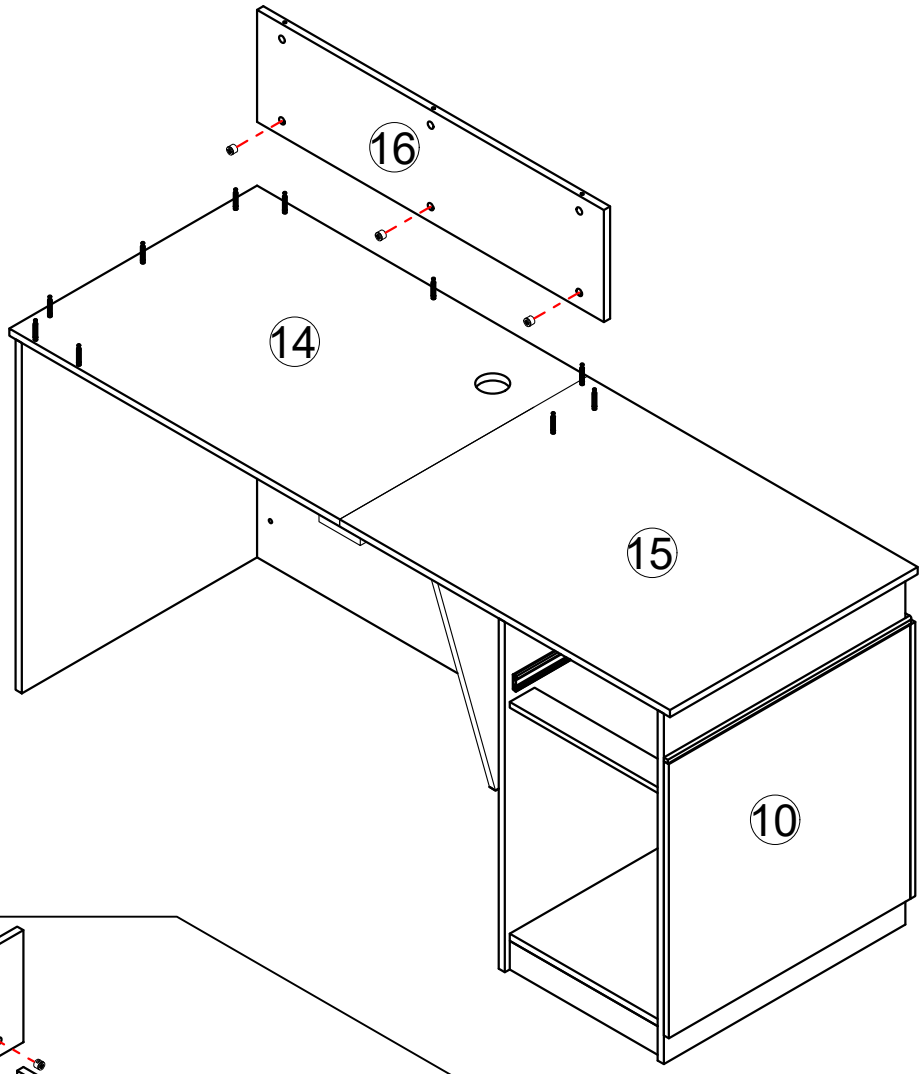

B x 3PCS

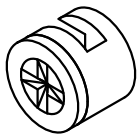

ø15*9mm

Step22

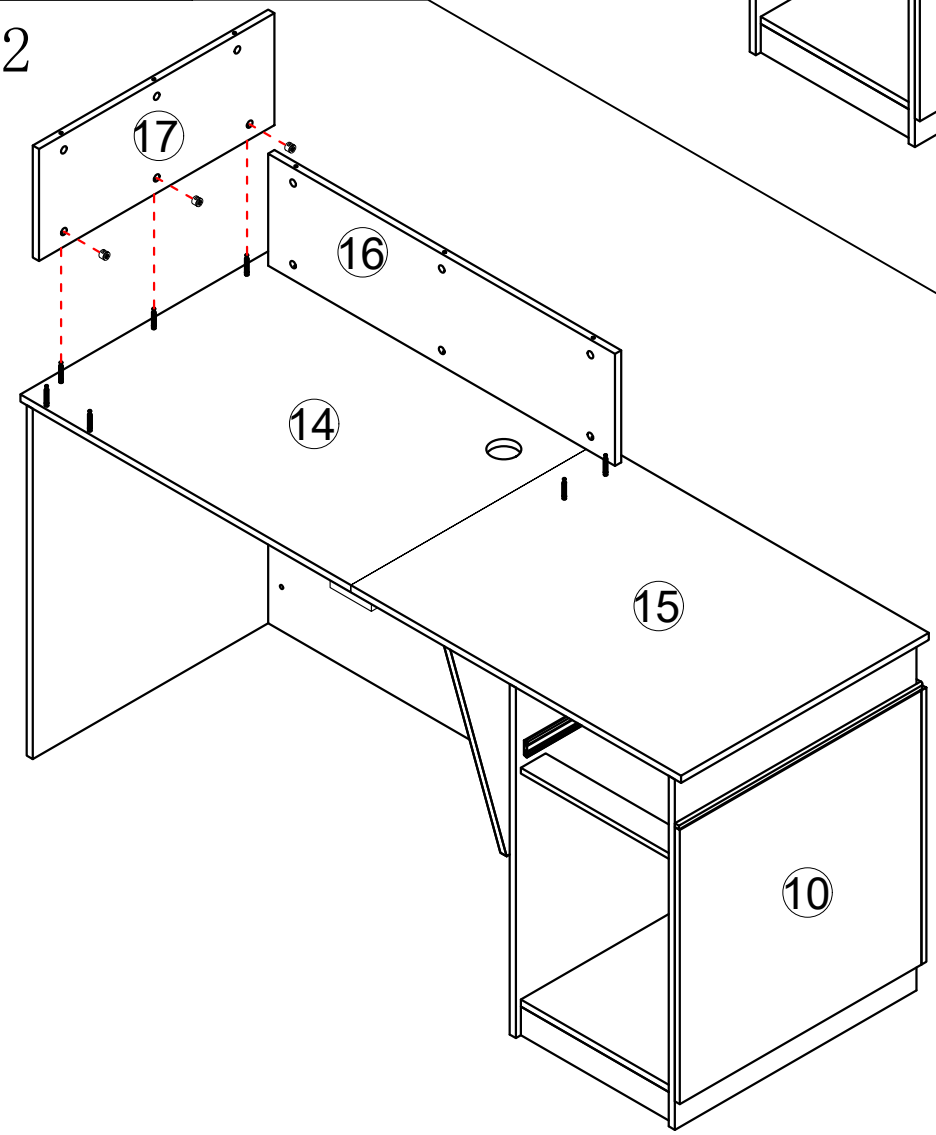

B x 3PCS

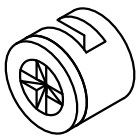

ø15*9mm

ASSEMBLY INSTRUCTION

Step23

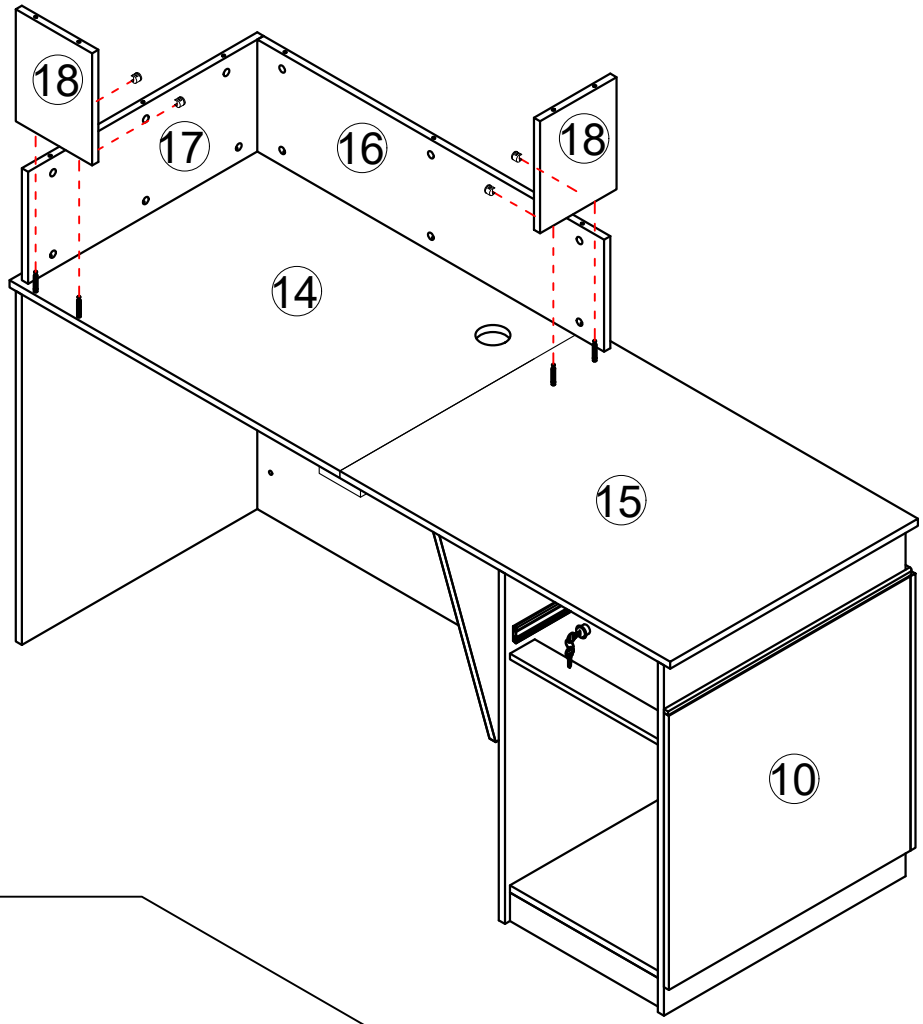

B x 4PCS

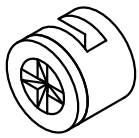

ø15*9mm

Step24

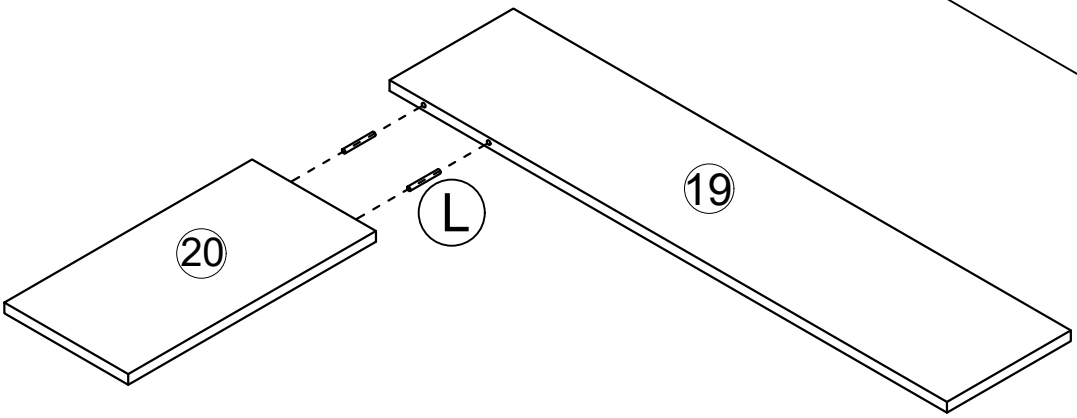

L x 2PCS

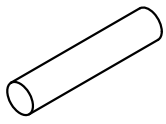

M6*30mm

ASSEMBLY INSTRUCTION

Step25

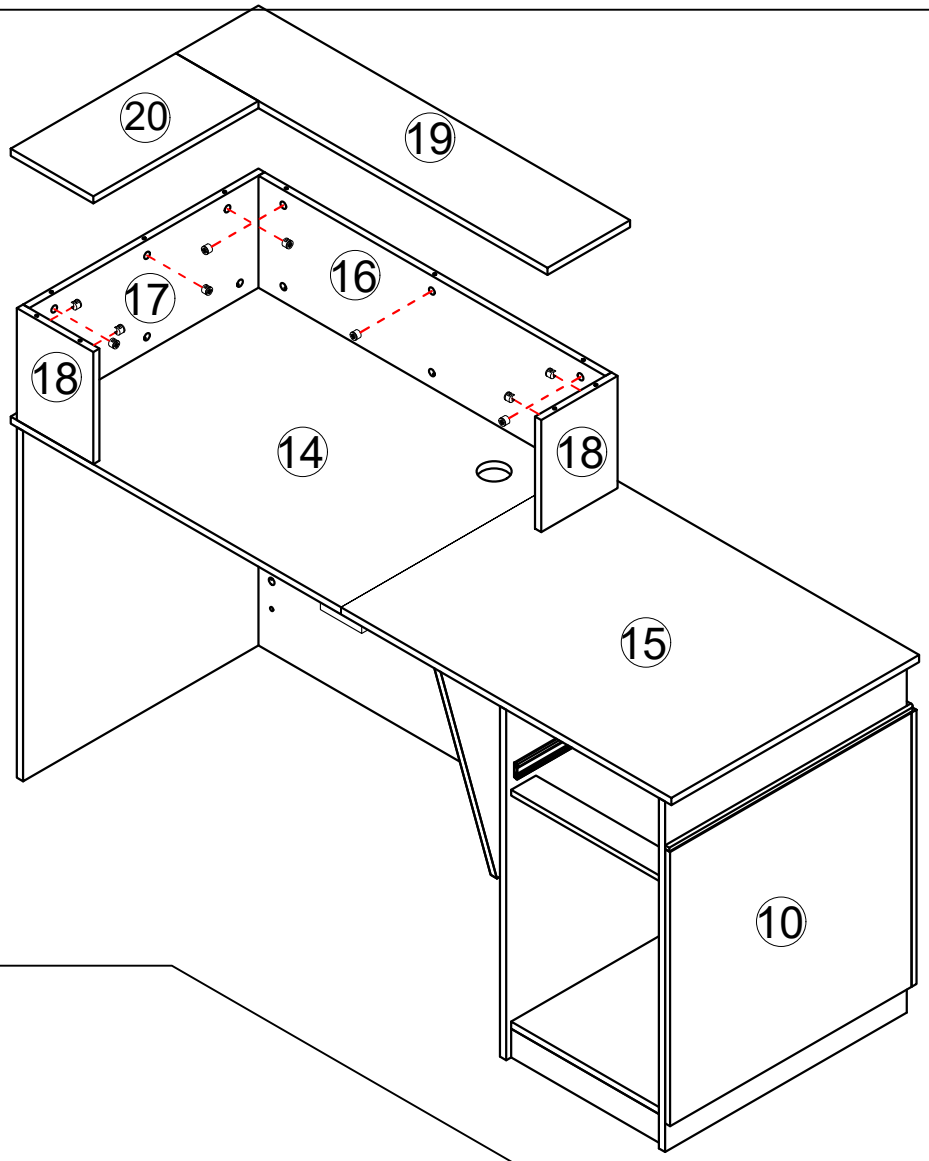

Step26

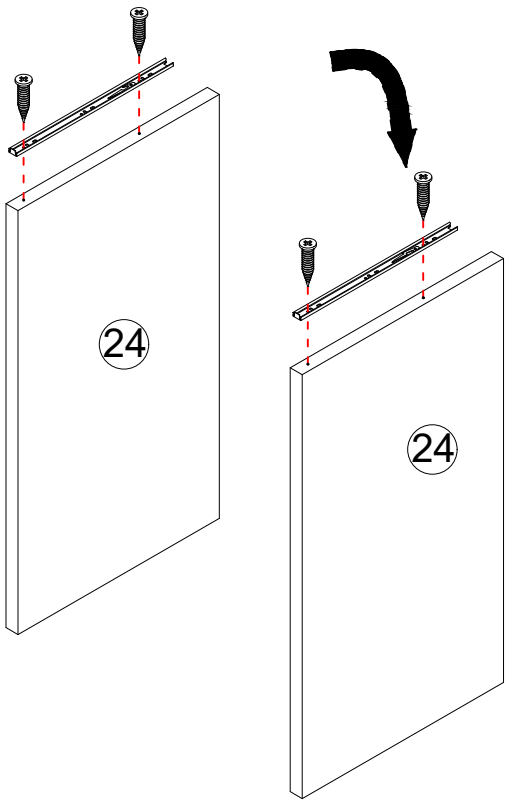

G x 4PCS



M3.5*12mm

J-2

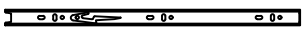

8″

ASSEMBLY INSTRUCTION

Step27

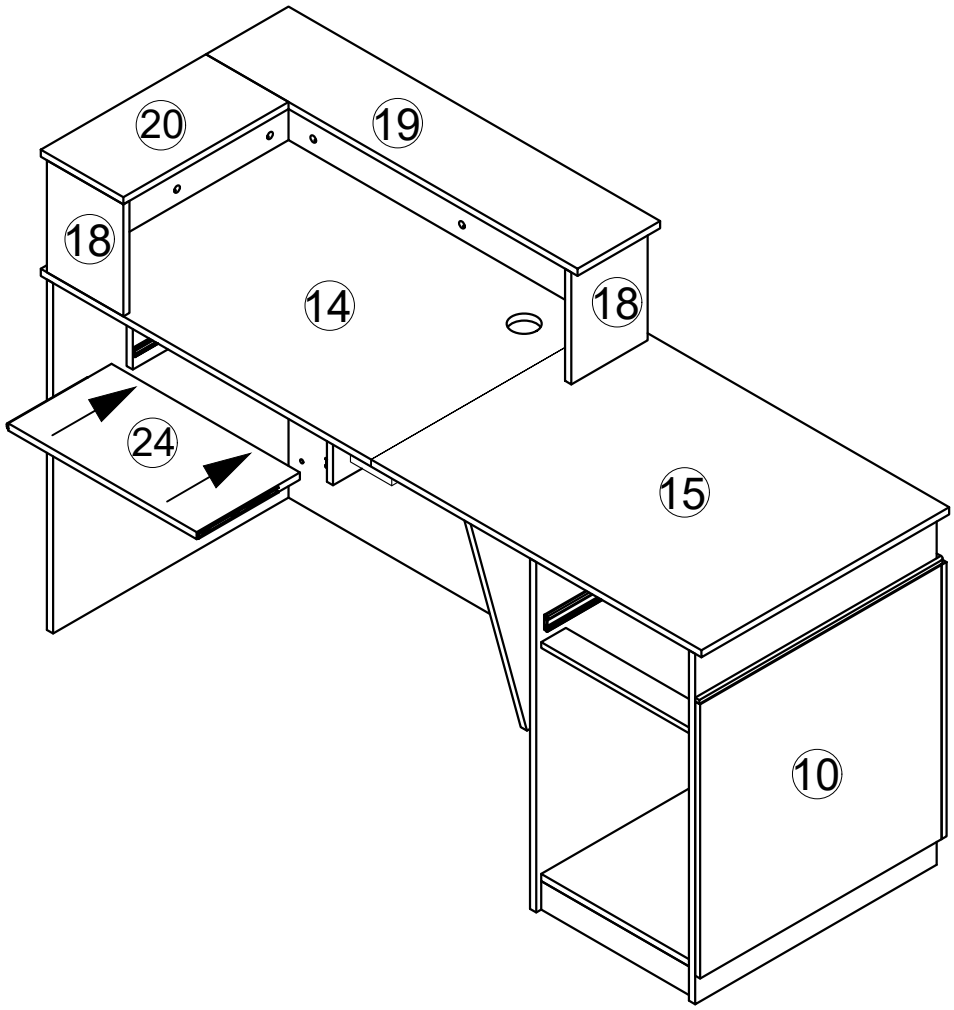

Step28

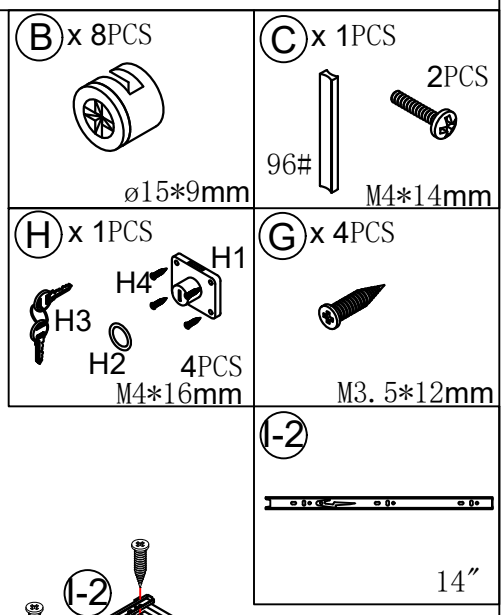

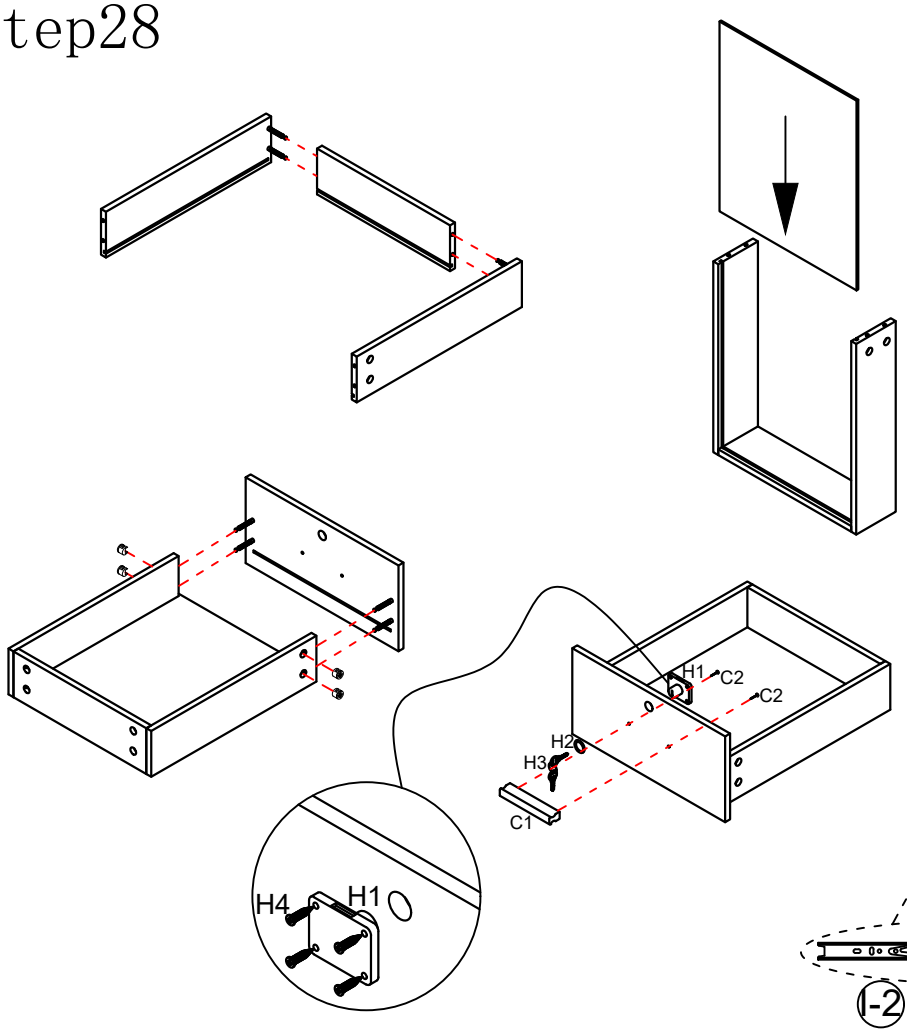

ASSEMBLY INSTRUCTION

Step29

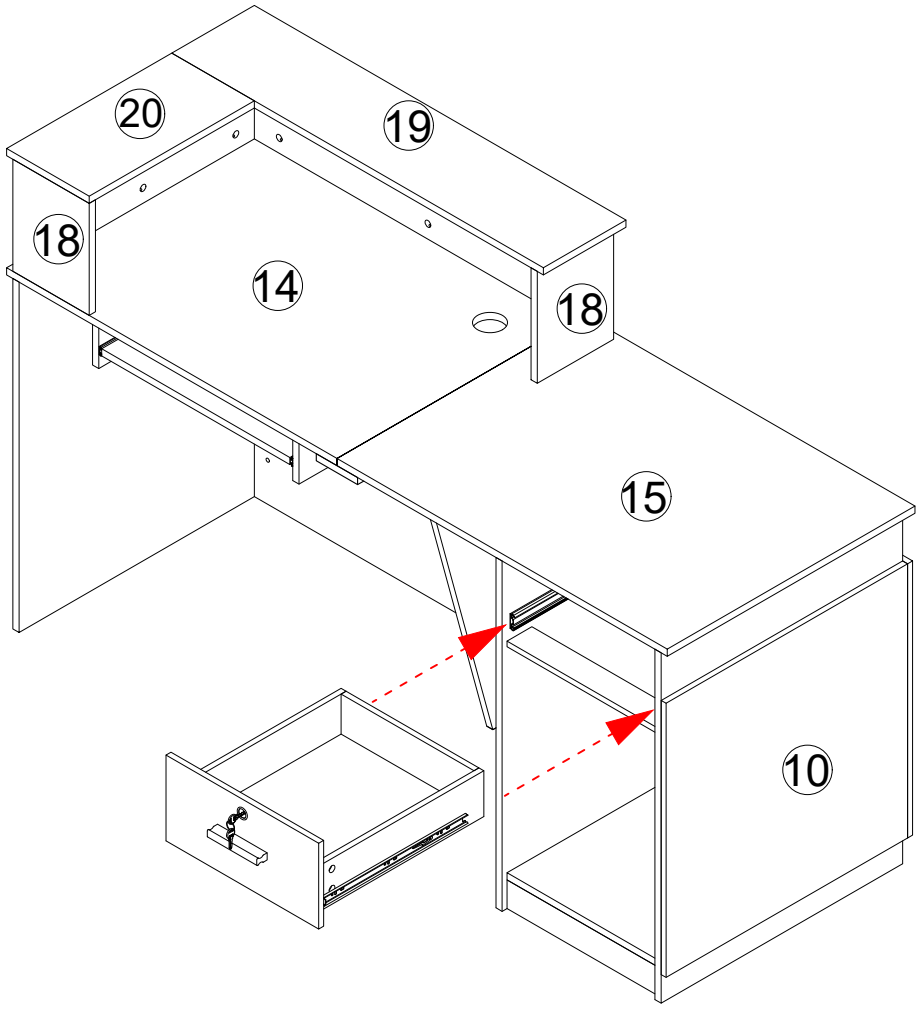

Step30

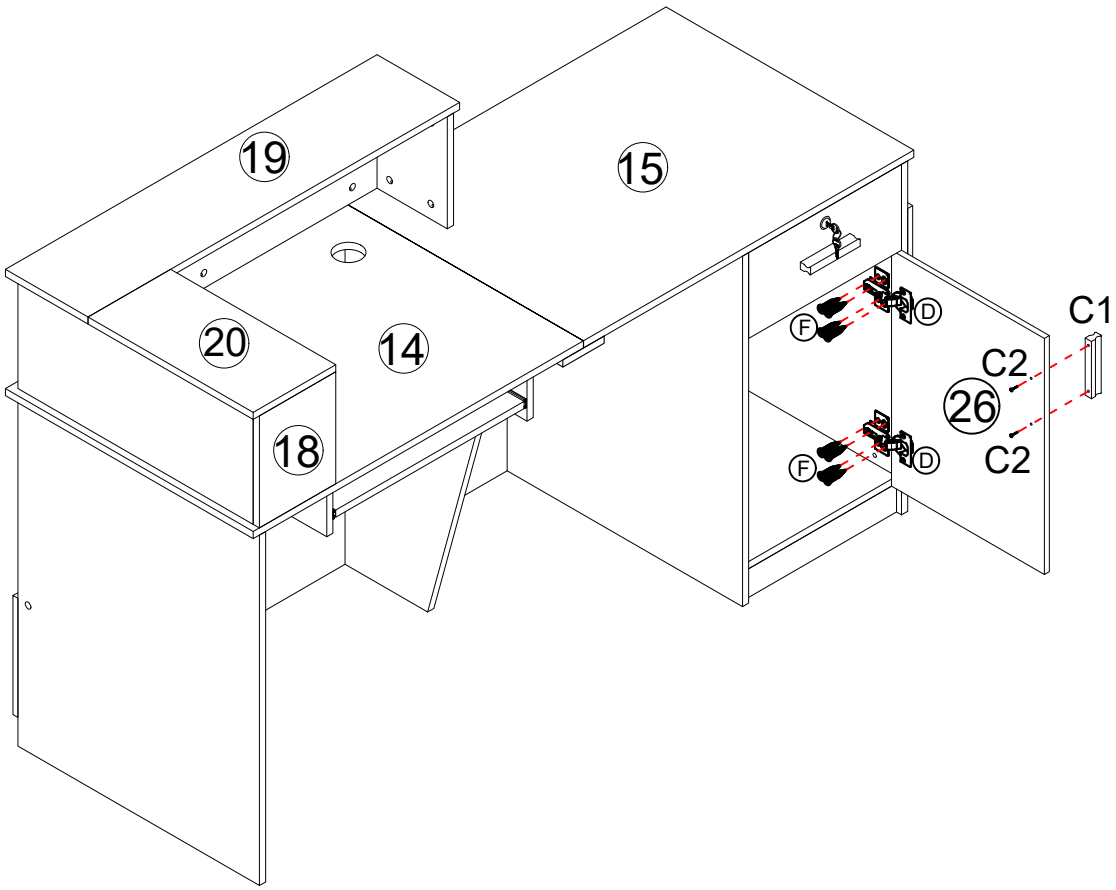

C x 1PCS

2PCS



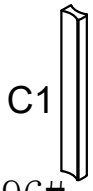

M4*14mm

D x 2PCS

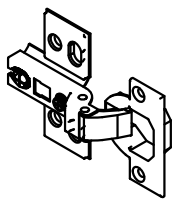

F x 12PCS



M4*14mm

ASSEMBLY INSTRUCTION

Step31

Ⓝ x 1PCS



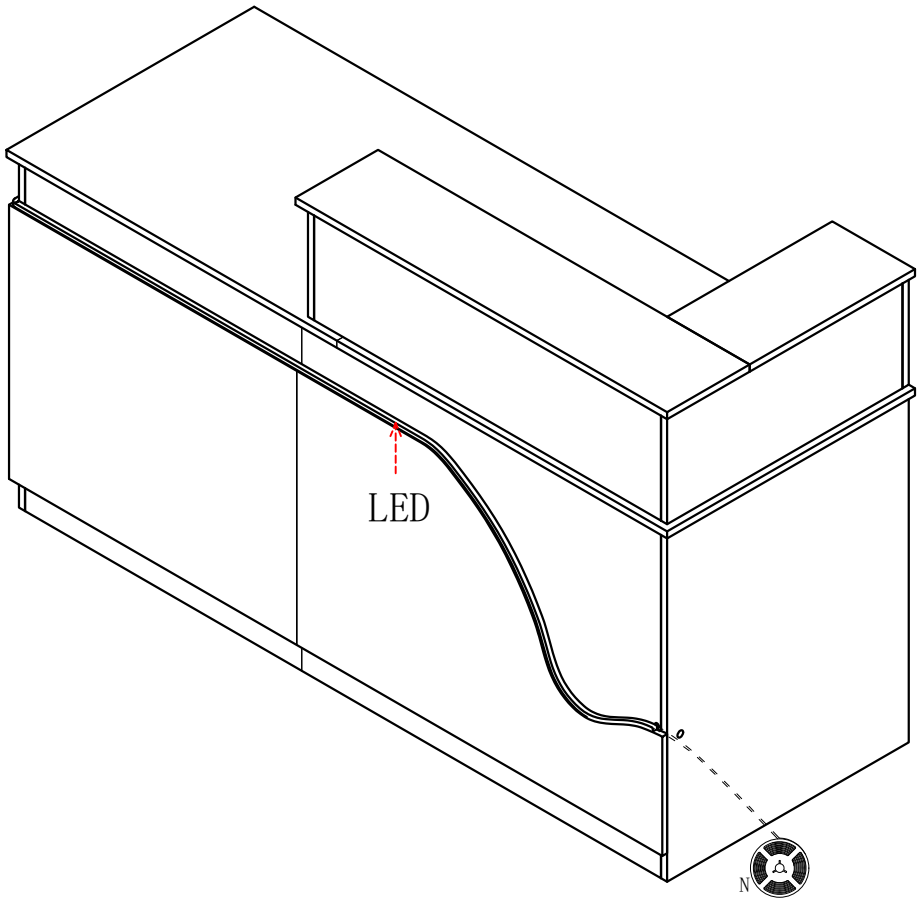

Step32

Ⓚ x 1PCS



ϕ50

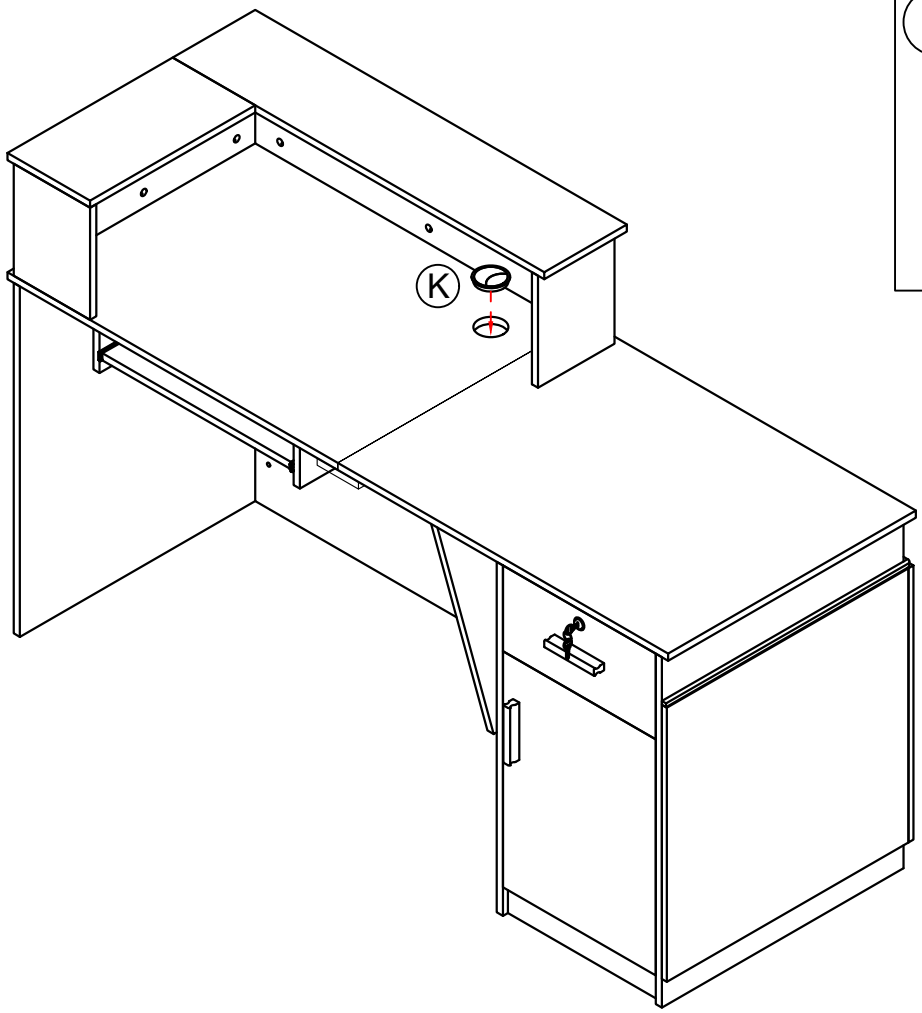

ASSEMBLY INSTRUCTION

Step33

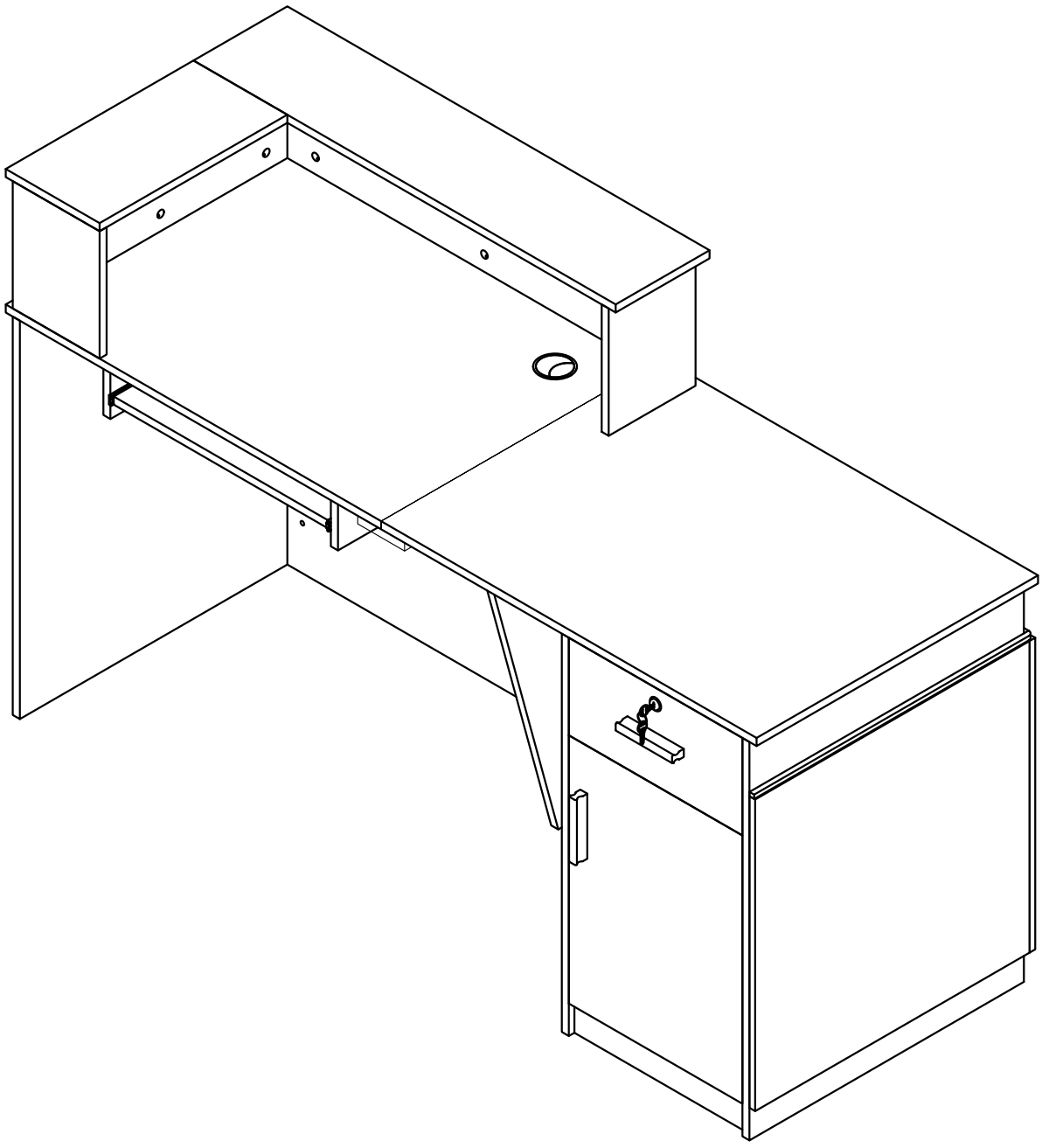

OK