# Rocking Chair

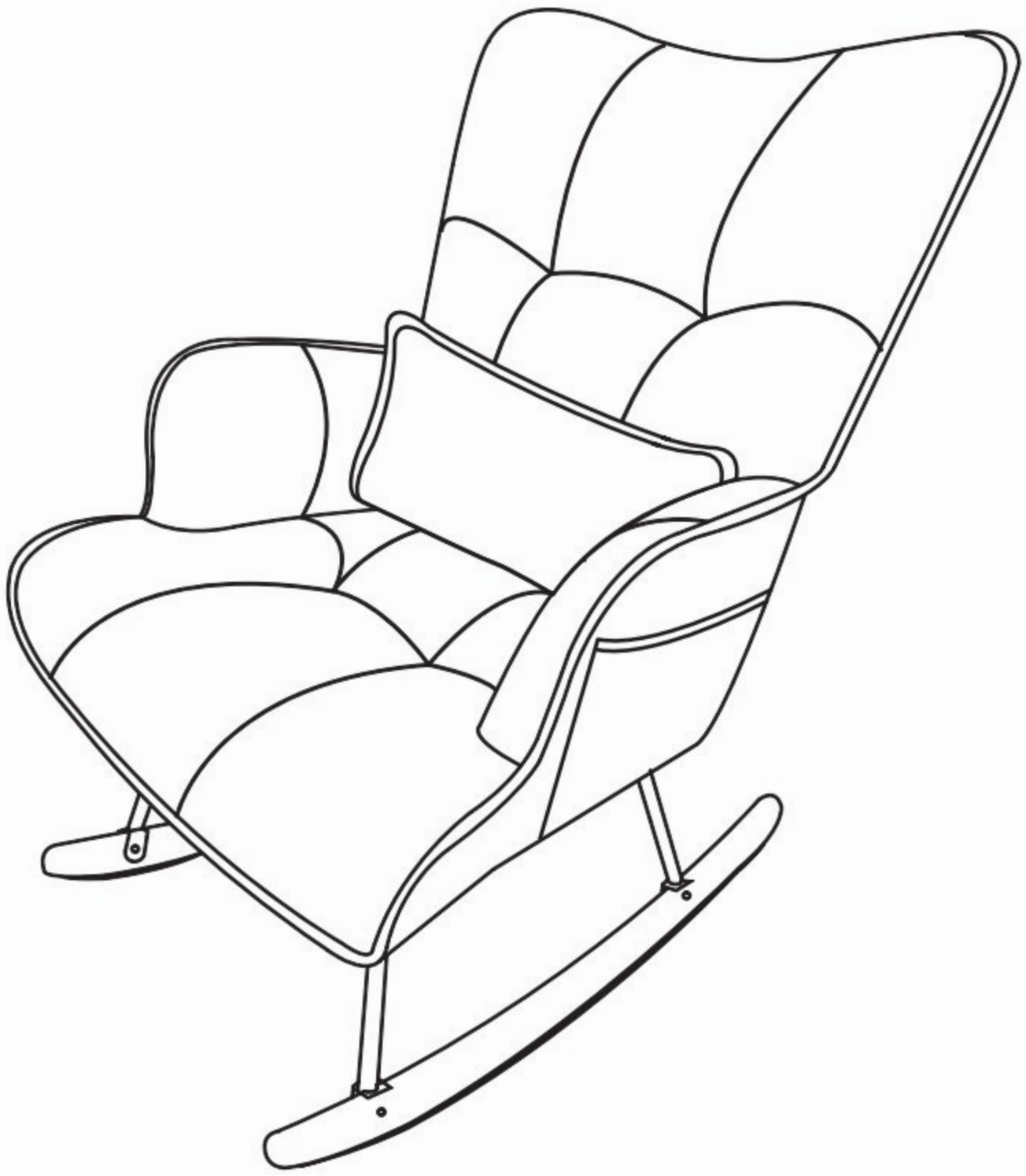

# Assembly Instructions

**Tips:** For optimal results, we recommend tightening the all screws to approximately **50%** before assembling the chair legs.
This should ensure chair legs proper alignment and a secure fit.

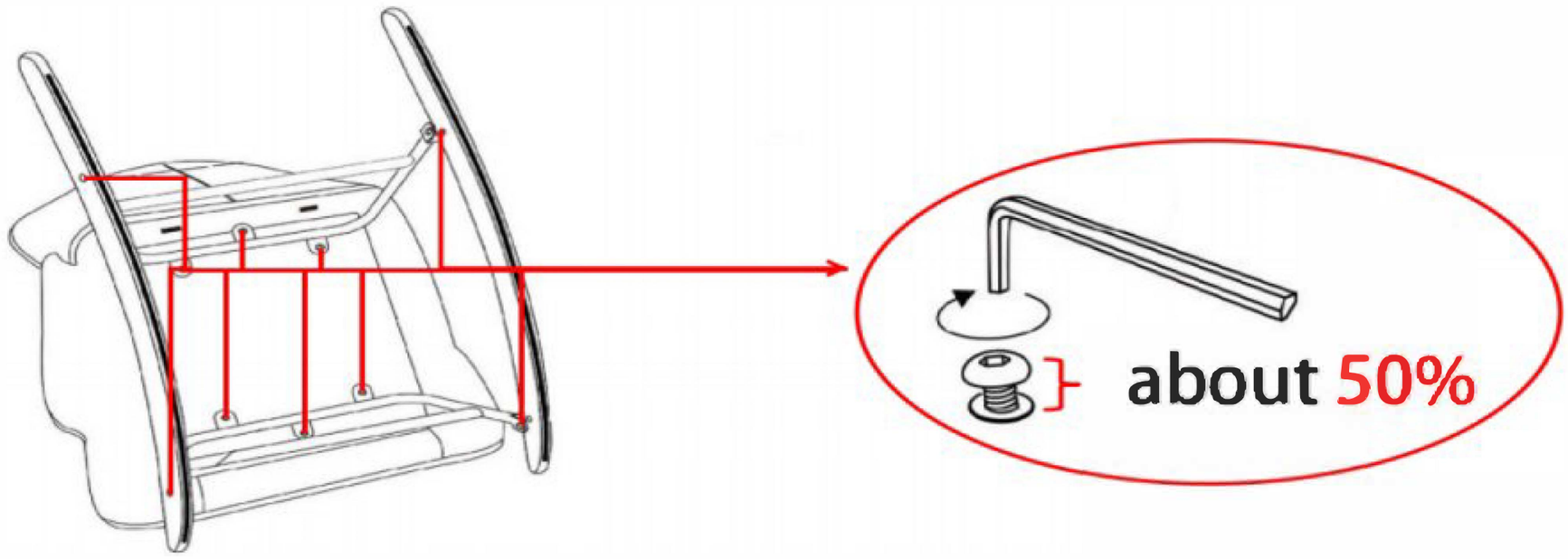


After installing the components, fully tighten the screws.

| | | | |
|---|---|---|---|
| A Seat Back 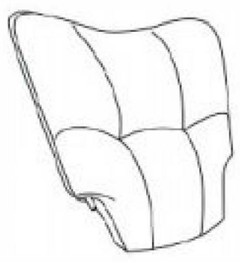 x 1 | B Seat Bottom  x 1 | C Left Wooden Leg 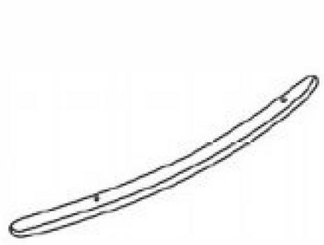 x 1 | D Right Wooden Leg 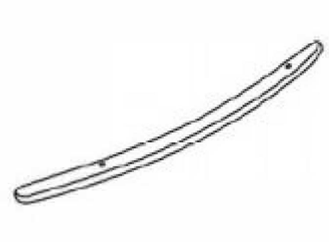 x 1 |
| E Back Metal Frame 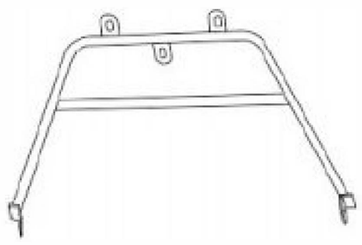 x 1 | F Front Metal Frame  x 1 | G Small Washers  x 10 | H Short Bolts  x 10 |
| I Long Bolts  x 2 | J Allen Wrench  x 1 | K Large Washers 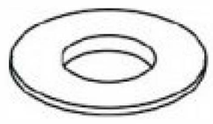 x 2 | L Lumbar Pillow 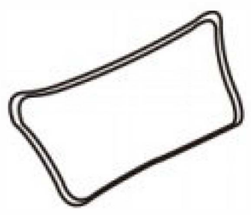 x 1 |

1 Line up the plugs of the Seat Back(A) with the holes on the armrests of Seat Bottom(B).

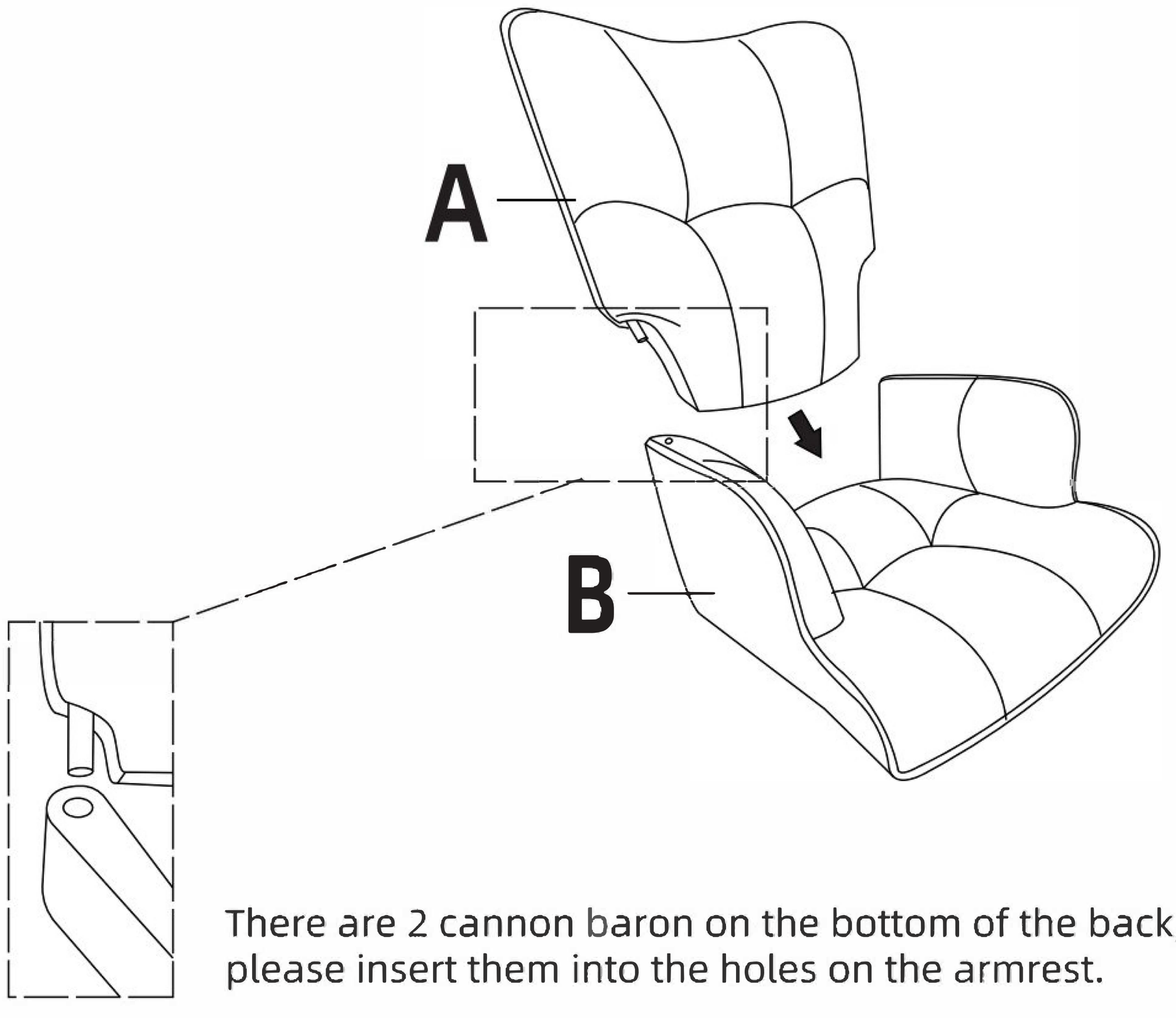


There are 2 cannon baron on the bottom of the back, please insert them into the holes on the armrest.

2

Align the Seat Back(A)with two arms,
and insert the Seat Back(A) to the Seat Bottom(B).

Hold the backrest and
press down

A

B

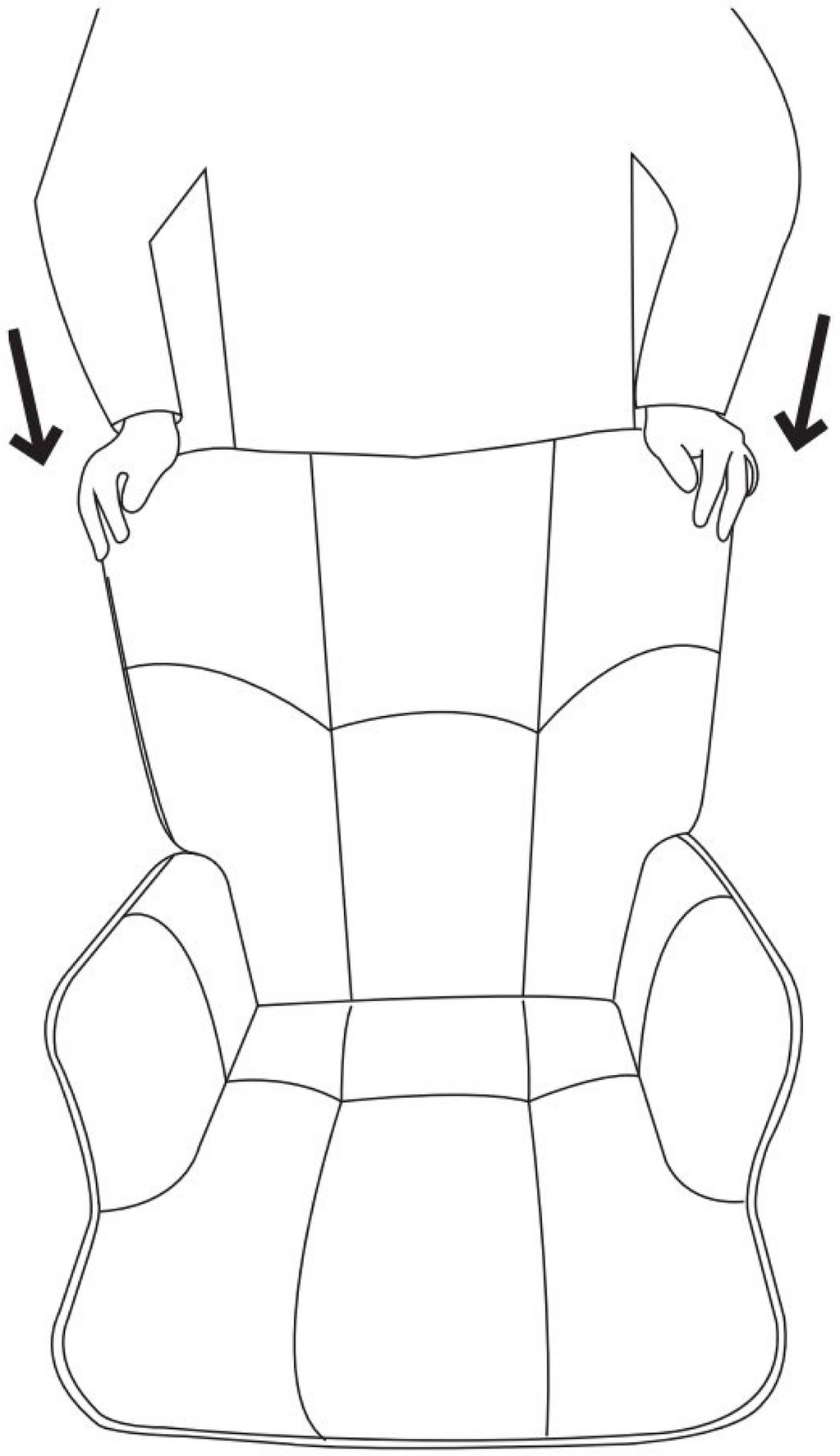

3

Make sure the back and the bottom tight fit, then drew the bolts in, then tighten.

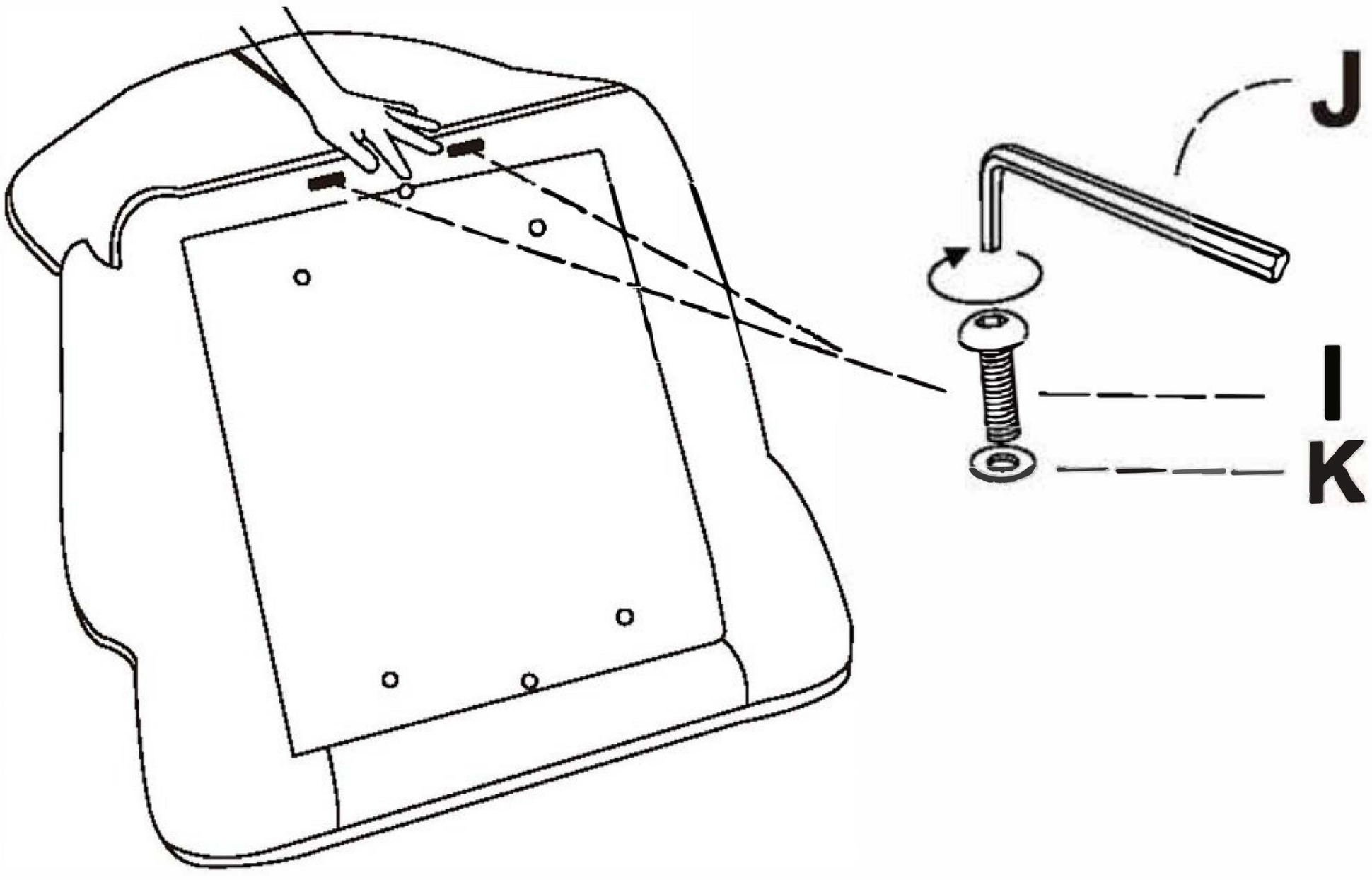


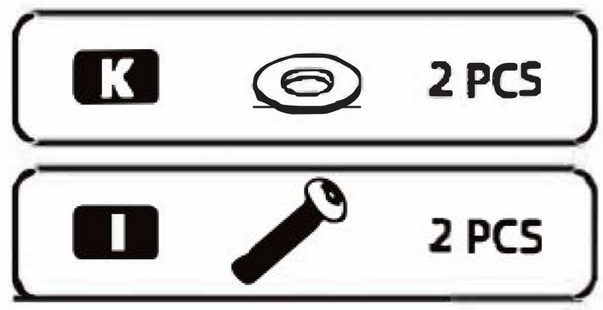

4

Insert nearly half of all bolts into below position first, then tighten all bolts.

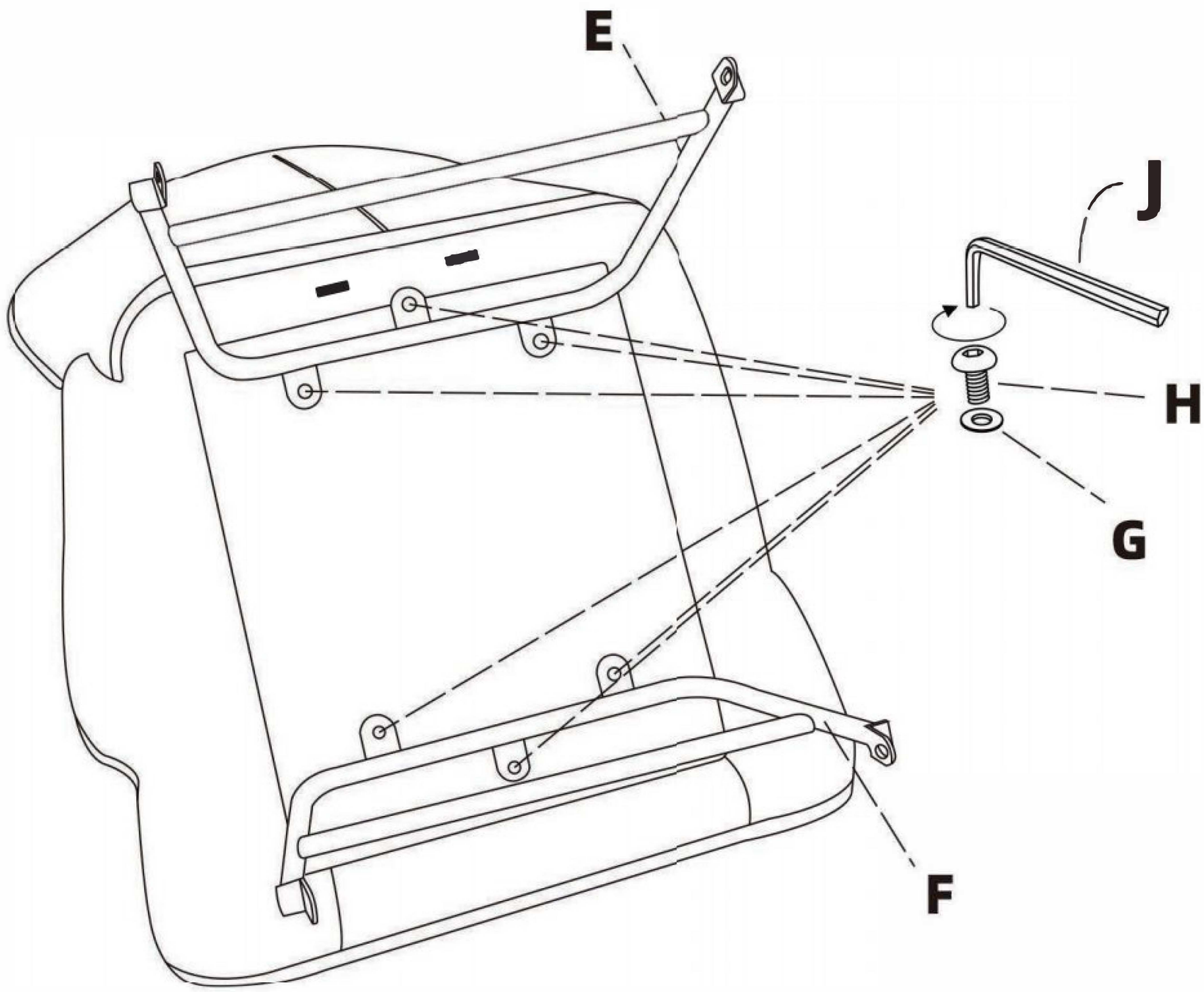


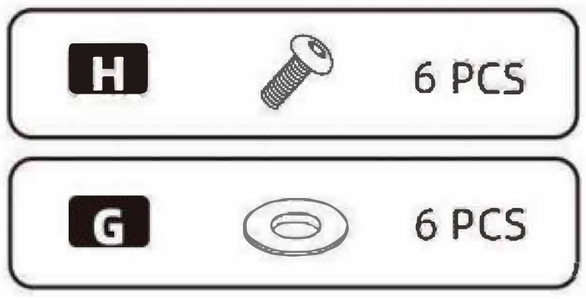

5

Make sure the longer side of C and D is facing the back of the chair.Then tighten all the bolts.

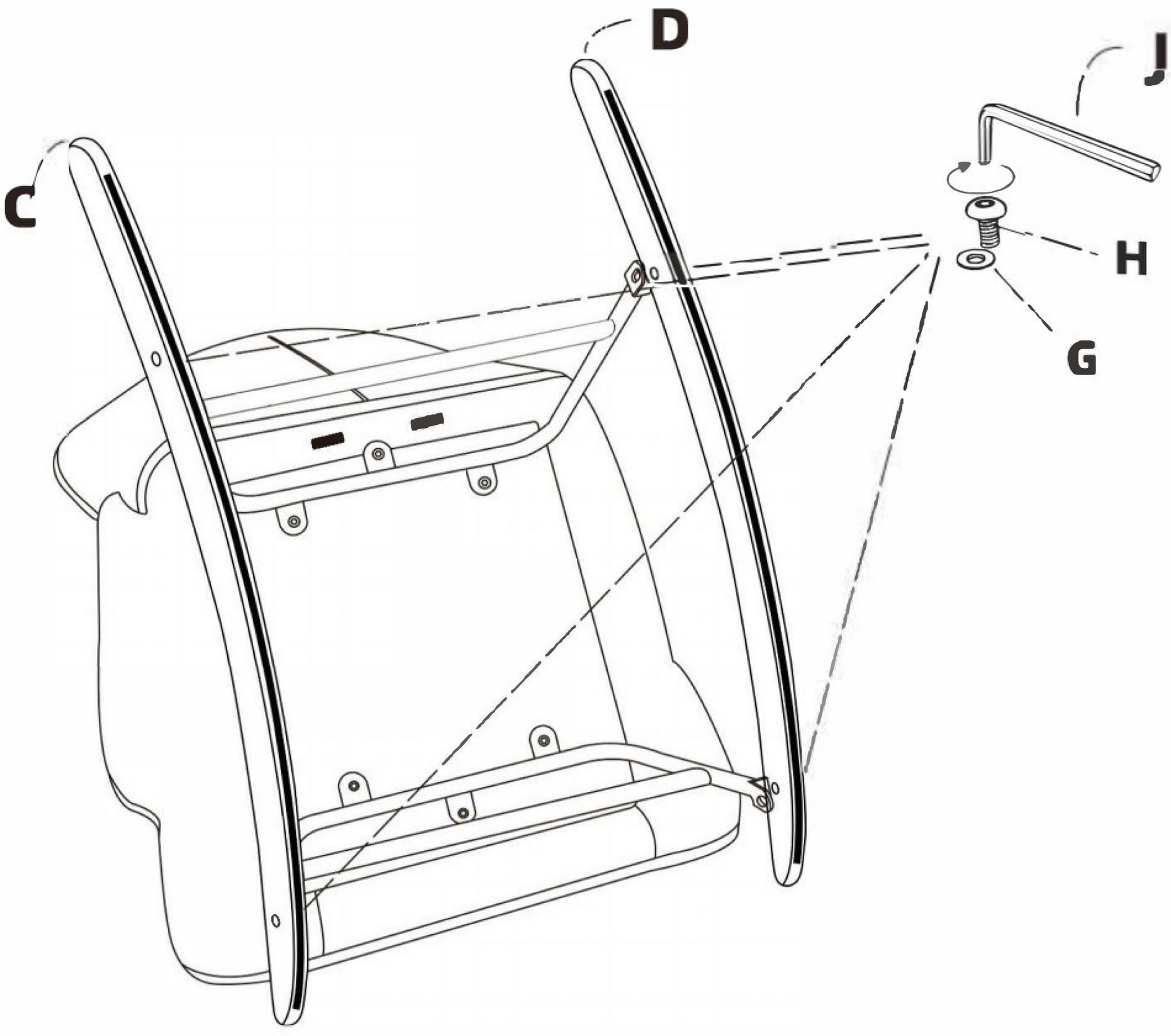


| | | |
|---|---|---|
| H | | 4 PCS |
| G | | 4 PCS |

## 6 After assembly, please check that all bolts are tight

