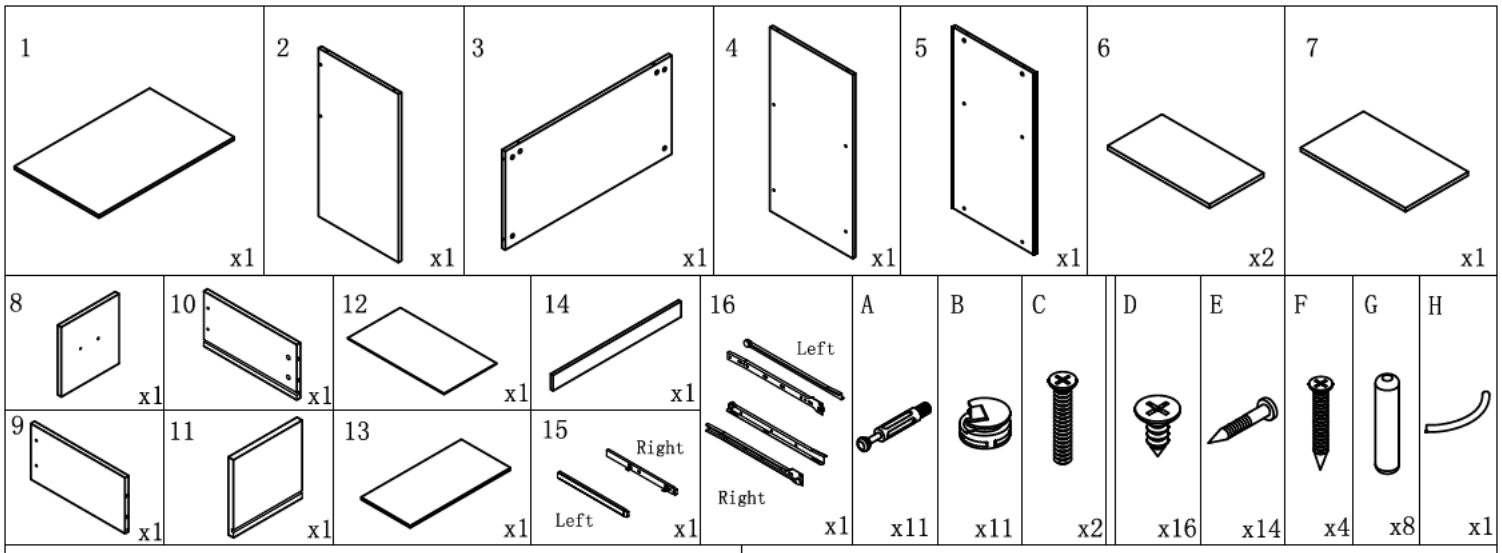
1 x1
2 x1
3 x1
4 x1
5 x1
6 x2
7 x1
8 x1
9 x1
10 x1
11 x1
12 x1
13 x1
14 x1
15 Right Left x1
16 Left Right x1
A x11
B x11
C x2
D x16
E x14
F x4
G x8
H x1

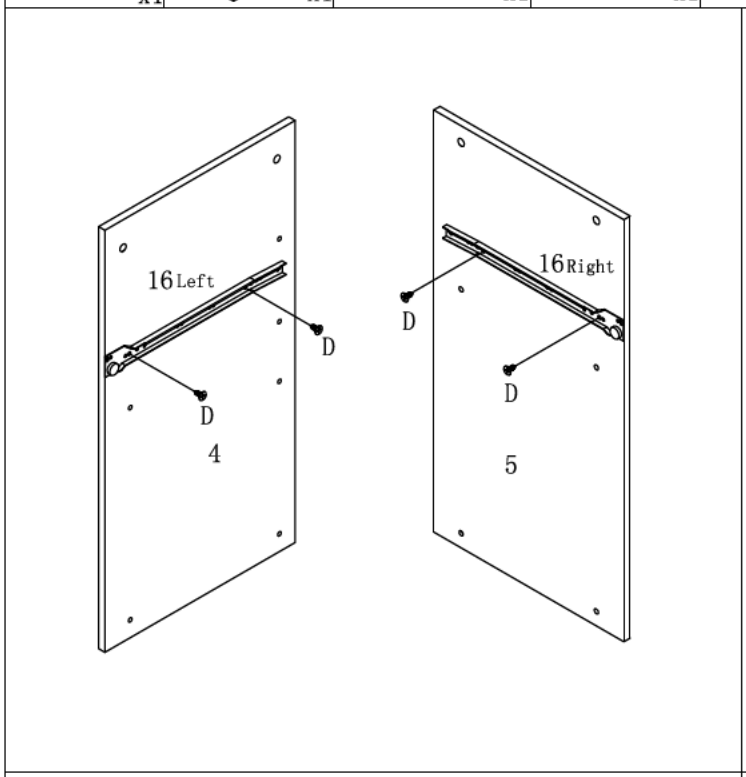
16 Left
D
D
4
16 Right
D
D
5

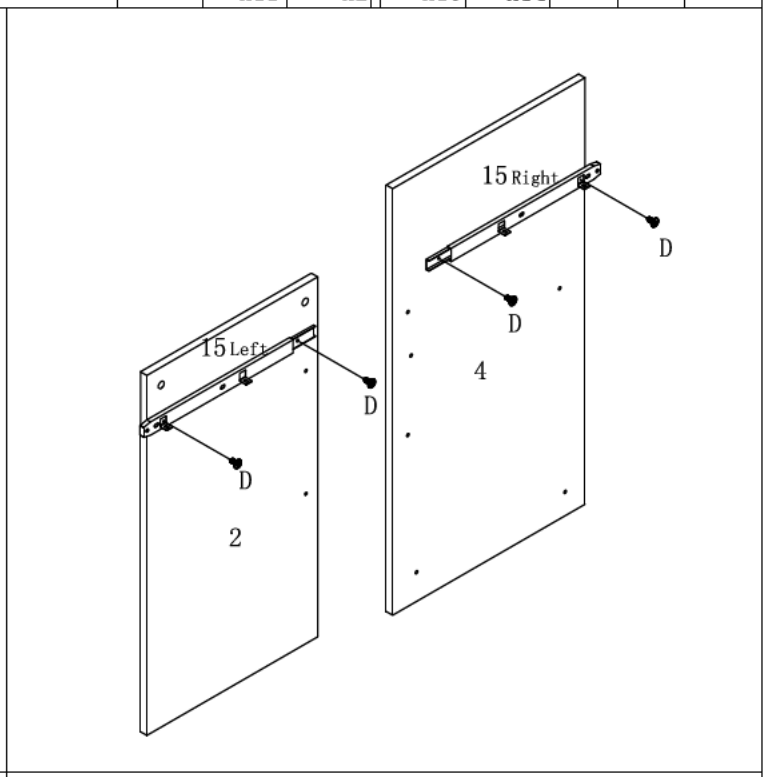
15 Right
D
D
4
15 Left
D
D
2

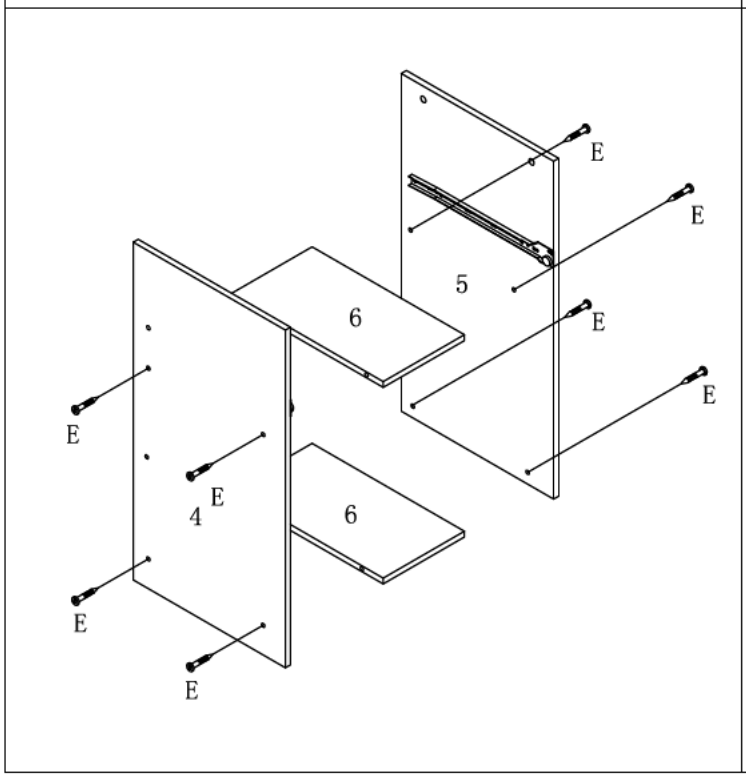
E
E
5
6
E
E
E
4
E
6
E
E

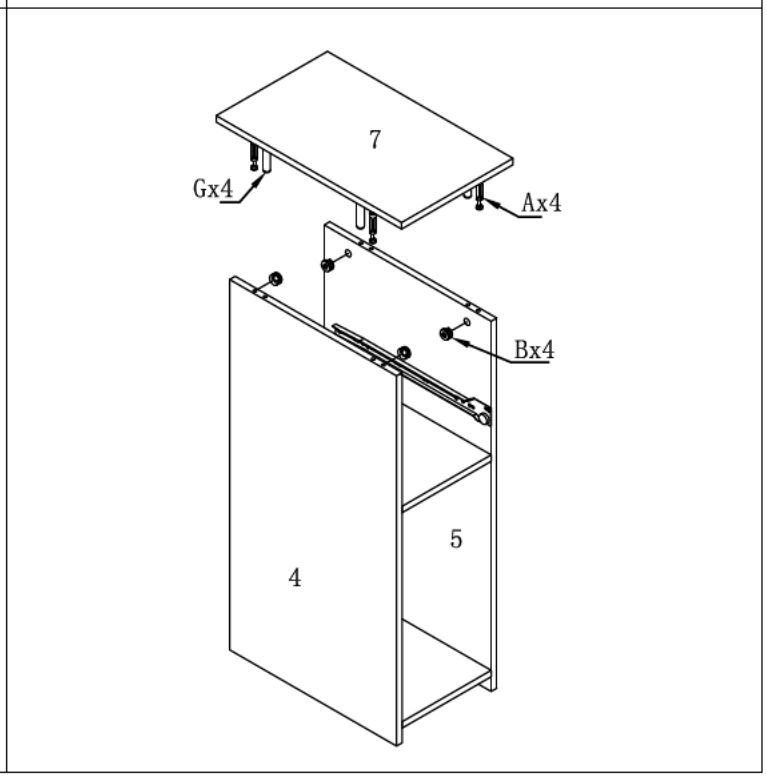
7
Gx4
Ax4
Bx4
5
4

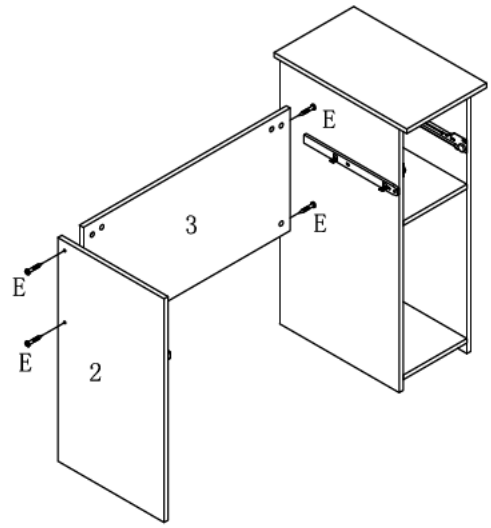
E
3
E
E
E
2

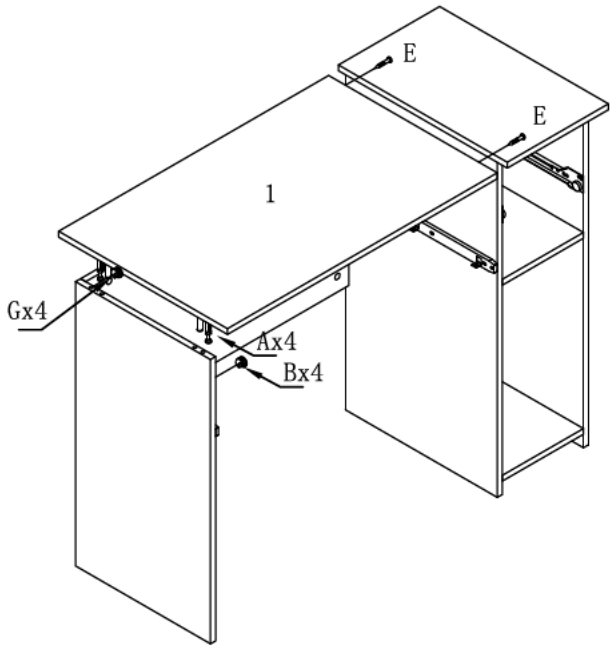
E
E
1
Gx4
Ax4
Bx4

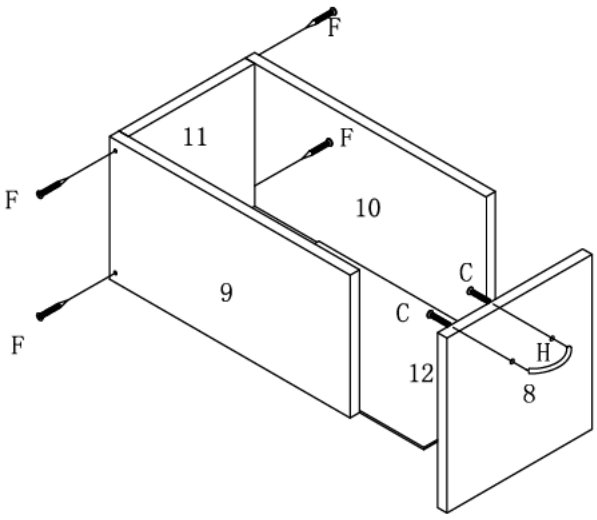
F
11
F
F
10
C
9
C
F
H
12
8

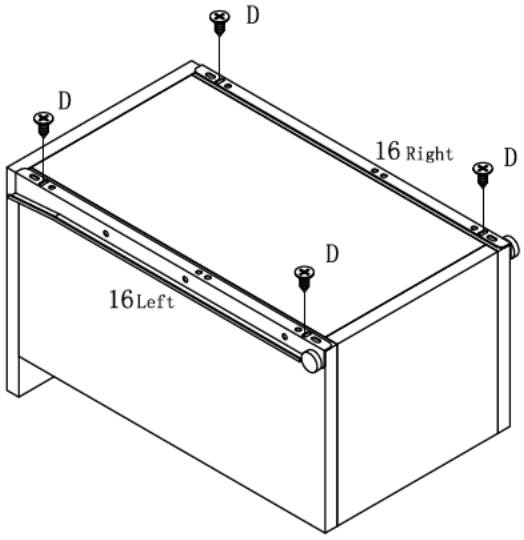
D
D
16 Right
D
D
16Left

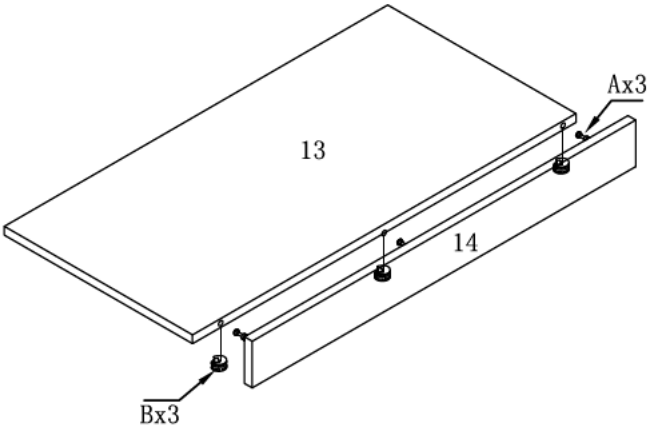
Ax3
13
14
Bx3

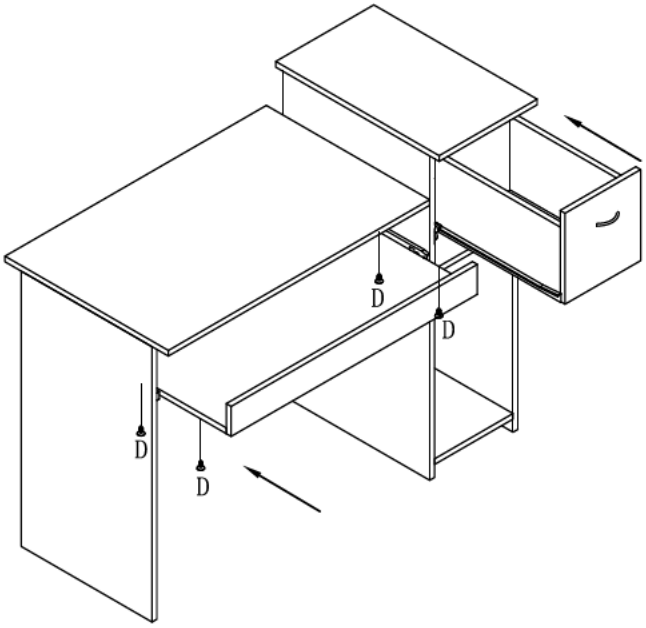
D
D
D
D