V1.0.0

PLATFORM BED

XHTSTLC001

ORIGINAL INSTRUCTION MANUAL

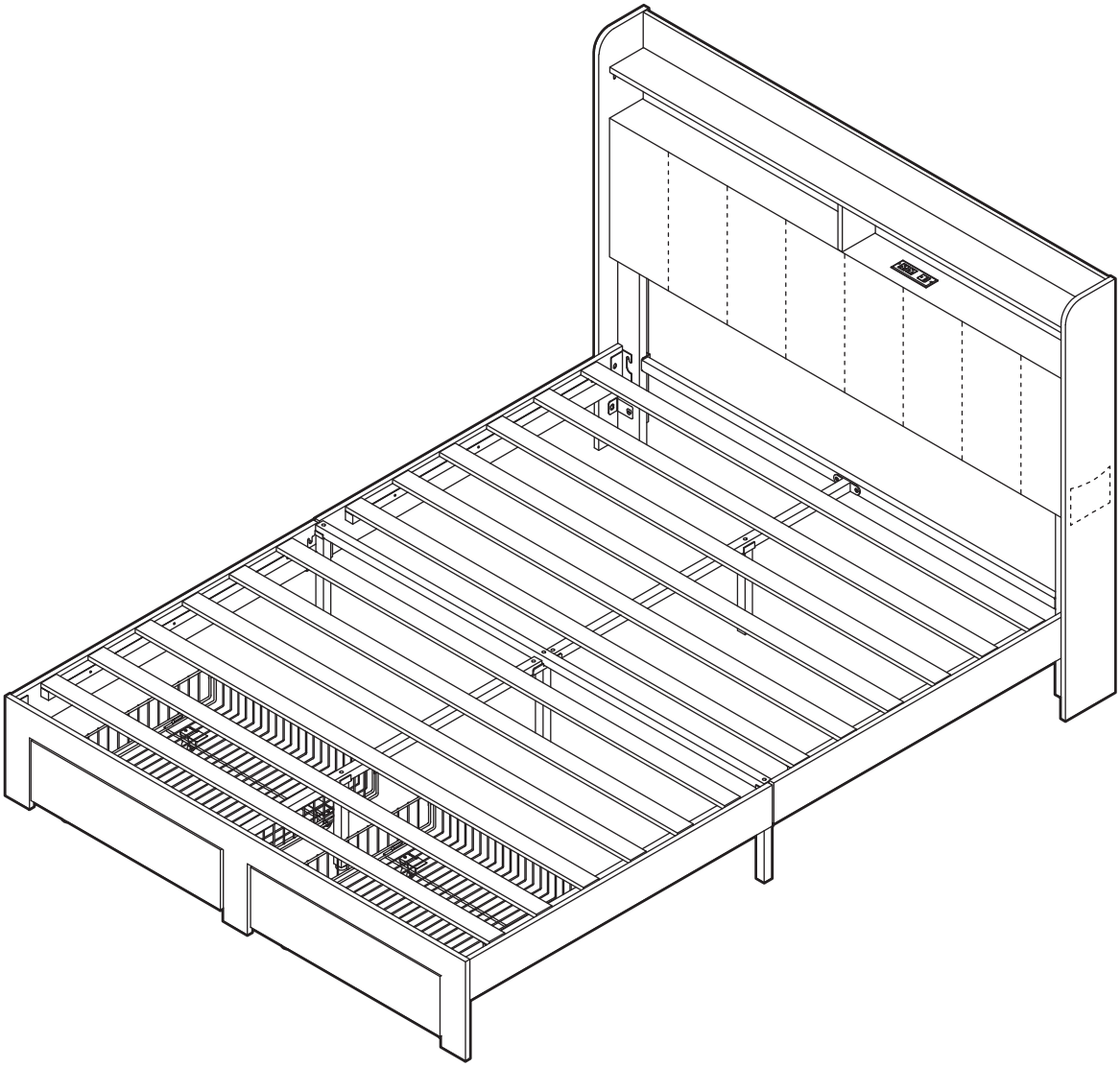

DEAR CUSTOMER,

Thank you for choosing our product. Please read this manual carefully before assembling or using the product, to avoid damage caused by improper use. If the product is passed on to third parties, this manual has to be passed on along with the product. For any question don’t hesitate to contact us.

INFORMATION TO THE USER

Note: This equipment has been tested and found to comply with the limits for a Class B digital device, pursuant to part 15 of the FCC Rules. These limits are designed to provide reasonable protection against harmful interference in a residential installation. This equipment generates, uses and can radiate radio frequency energy and, if not installed and used in accordance with the instructions, may cause harmful interference to radio communications. However, there is no guarantee that interference will not occur in a particular installation. If this equipment does cause harmful interference to radio or television reception, which can be determined by turning the equipment off and on, the user is encouraged to try to correct the interference by one or more of the following measures:

—Reorient or relocate the receiving antenna.
—Increase the separation between the equipment and receiver.
—Connect the equipment into an outlet on a circuit different from that to which the receiver is connected.
—Consult the dealer or an experienced radio/TV technician for help.

Important: Change or modifications not expressly approved by the manufacturer responsible for compliance could void the user's authority to operate the equipment.

WARNING: This device complies with Part 15 of the FCC Rules. Operation is subject to the following two conditions: (1) This device may not cause harmful interference, and (2) This device must accept any interference received, including interference that may cause undesired operation.

CHARGER STATION INSTRUCTION

See instruction manual for use in countries other than the U.S.A.
Please keep observed safety notes before use

Technical Data

125V~ 60Hz 12A
USB-A/C Out:5V⎓3A,Total Out:5V⎓3A Max
Caution: Risk of electric shock-Do not open. For indoor use only.

General

To comply with the published safety standards, the following must be observed when using this power supply.

1. For information technology equipment and office equipment use only.
2. The output power taken from the supply must not exceed the rating given on the power supply.
3. The charger is not intended to be repaired by service personnel in case of failure or component defect (unit can be thrown away).
4. The external flexible cable or terminal of this charger cannot be replaced; If the cord is damaged, the transformer should be scrapped.
5. The disconnection from line voltage is made by pulling the mains plug.
6. The socket-outlet shall be installed near the equipment and shall be easily accessible.
7. DISPOSAL: Do not dispose this product as unsorted municipal waste. Collection of such waste separately for special treatment is necessany.
8. For connection to a supply not in the U.S.A., use an attachment plug adapter of the proper configuration for the power outlet, if needed.

WARNING

Read these instructions carefully and retain them for future use.
If this product is passed to a third party, then these instructions must be included.

⚠ WARNING To reduce the risk of burns, fire, electric shock, or injury to persons:

- Read all instructions before using the furnishing.

⚠ DANGER To reduce the risk of electric shock; always unplug this-furnishing from the electrical outlet before cleaning or servicing.

⚠ WARNING Risk of injury! Keep children away from the foot support.

⚠ CAUTION Risk of injury and fire! Connect only to the furnishing specified in this instruction manual.

- Unplug from outlet before putting on or taking off parts.
- Close supervision is necessary when this furnishing is used by, or near children, invalids, or disabled persons.
- Use this furnishing only for its intended use as described in these instructions.
  Do not use attachments not recommended by the manufacturer.
- Never operate this furnishing if it has a damaged cord or plug, if it is not working properly, if it has been dropped or damaged, or dropped into water. Return the furnishing to a service center for examination and repair.
- Keep the cord away from heated surfaces.
- Never drop or insert any object into any opening.
- Do not use outdoors.
- Do not operate where aerosol (spray) products are being used or where oxygen is being administered.
- To disconnect, turn all controls to the off position, then remove plug from outlet.
- To reduce the risk of electric shock, this furnishing has a polarized plug (one blade is wider than the other). This plug will fit in a polarized outlet only one way. If the plug does not fit fully in the outlet, reverse the plug. If it still does not fit, contact a qualified electrician to install the proper outlet. Do not change the plug in any way.

Before First Use

- Check the furnishing for transport damages.
- Remove all the packing materials.
- Before connecting the furnishing to the power supply, check that the power supply voltage and current rating corresponds with the power supply details shown on the specifications.

⚠ DANGER Risk of suffocation! Keep any packaging materials away from children - these materials are a potential source of danger, e.g. suffocation.

EXPLODED VIEW

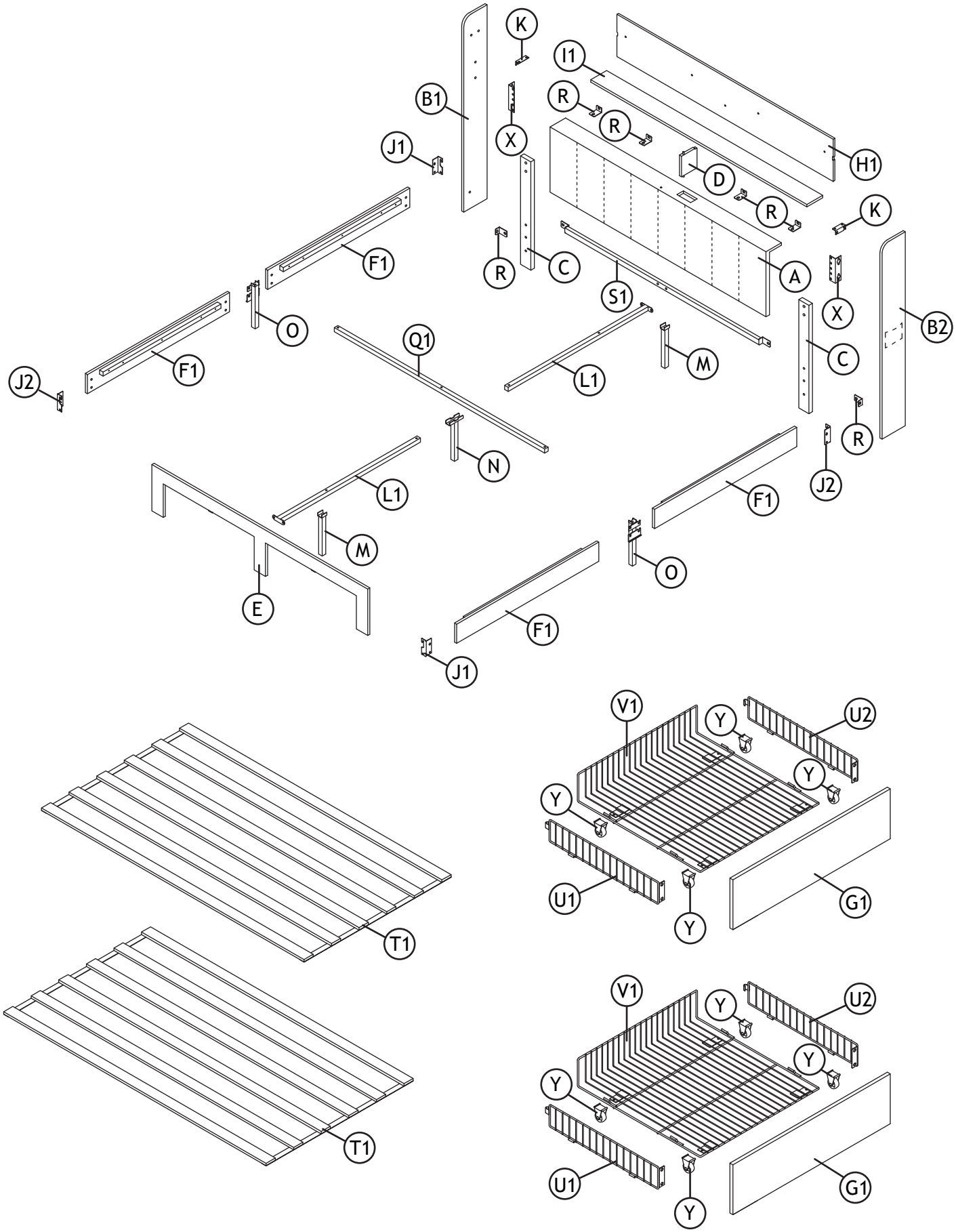

Parts list

A 1× 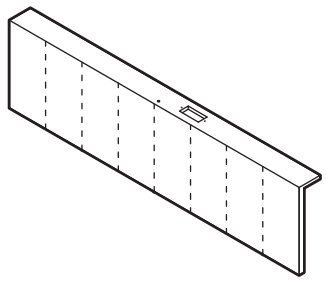	B1 1×	B2 1× 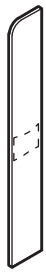
C 2×	D 1× 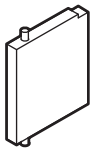	E 1× 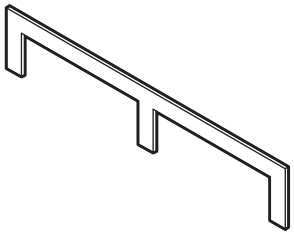
F1 4× 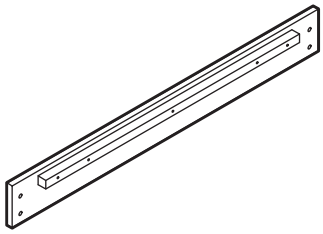	G1 2× 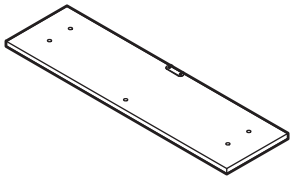	H1 1× 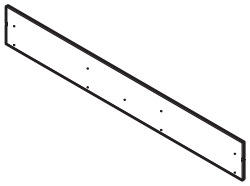
I1 1× 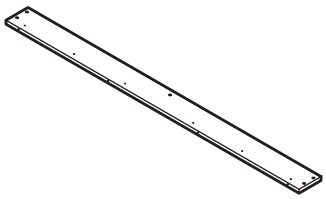	J1 2× 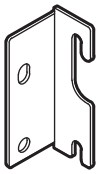	J2 2× 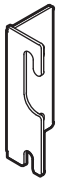
K 2× 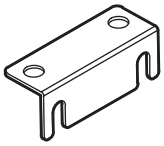	L1 2× 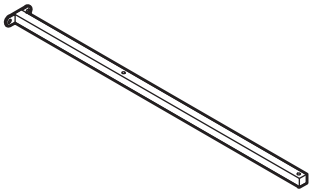	M 2×

N 1× 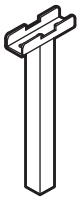	O 2×	Q1 1× 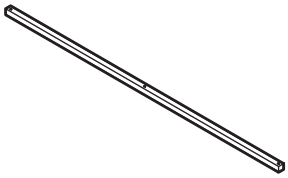
R 6× 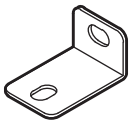	S1 1× 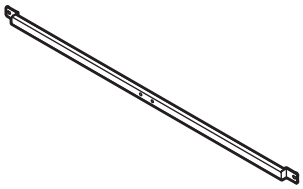	T1 2× 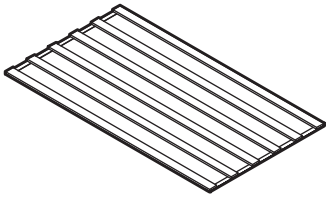
U1 2× 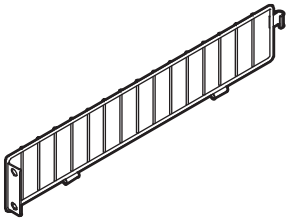	U2 2× 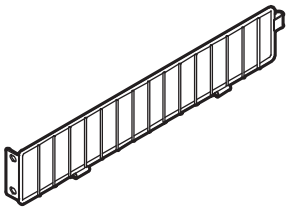	V1 2× 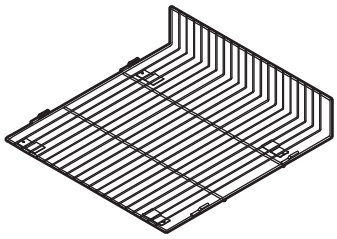
W 2× 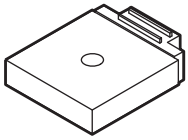	X 2× 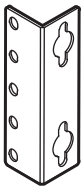	Y 8× 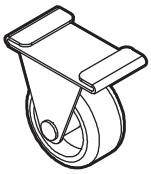
Z1 1× 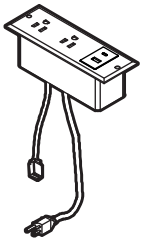	Z2 1× 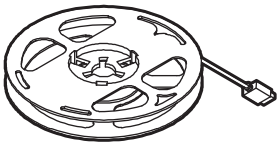 1.35M	Z5 1× 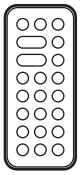

P1 50× M8×16MM	P2 7× 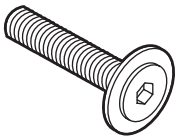 M8×45MM	P3 6× 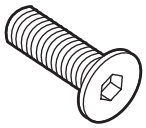 M8×35MM
P4 2× 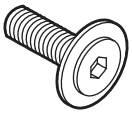 M8×25MM	P5 2× M8	P6 5× 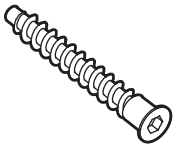 M6×50MM
P7 2× 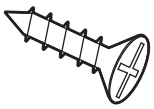 M3×15MM	P8 8×	P9 8× 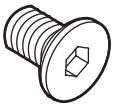 M8×12MM
P10 2× 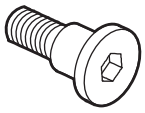 M8×18MM	P11 4× 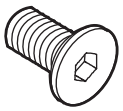 M6×12MM	P12 6× 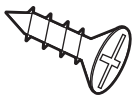 M3×10MM
P13 6×	P14 1× 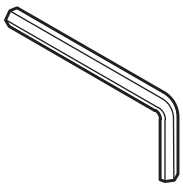 M8 Spanner	P15 1× M4 Spanner
P16 1× 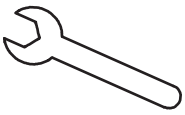 M4 Spanner	P17 1× M8 Spanner	

ASSEMBLY

Before your installation, please make sure that you have all the parts listed on the manual. If you find something missing, stop installing and contact your supplier immediately.

1

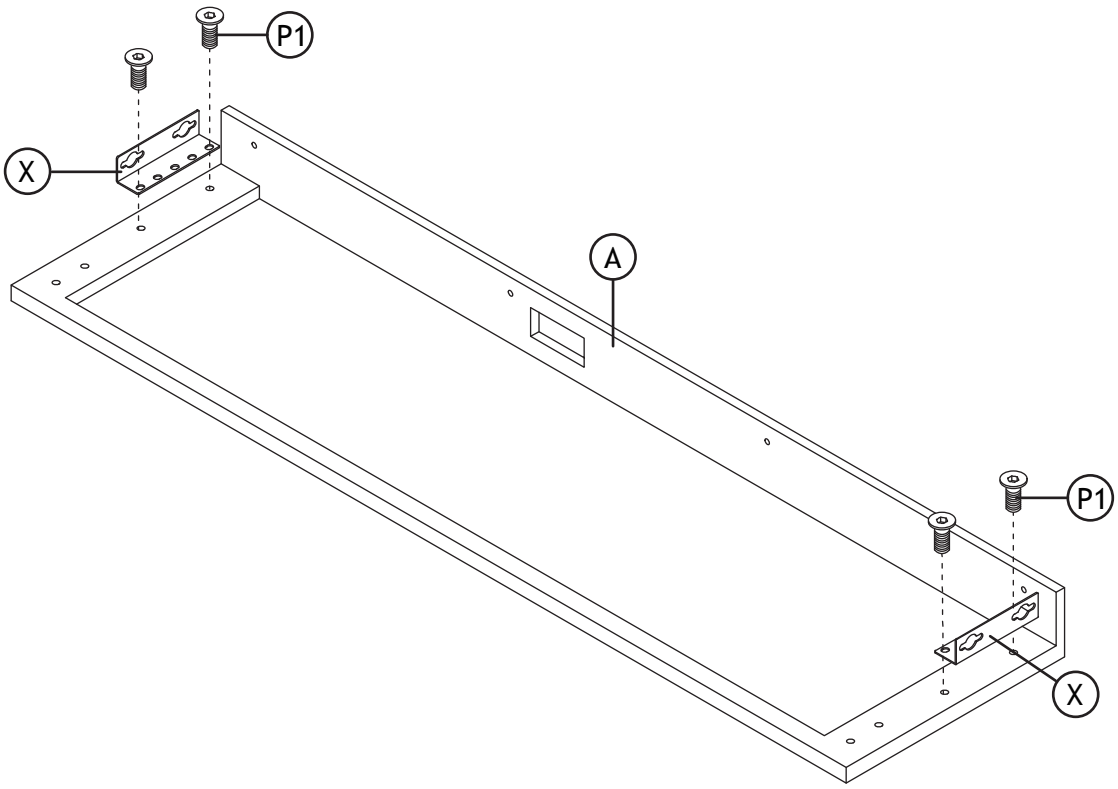

2

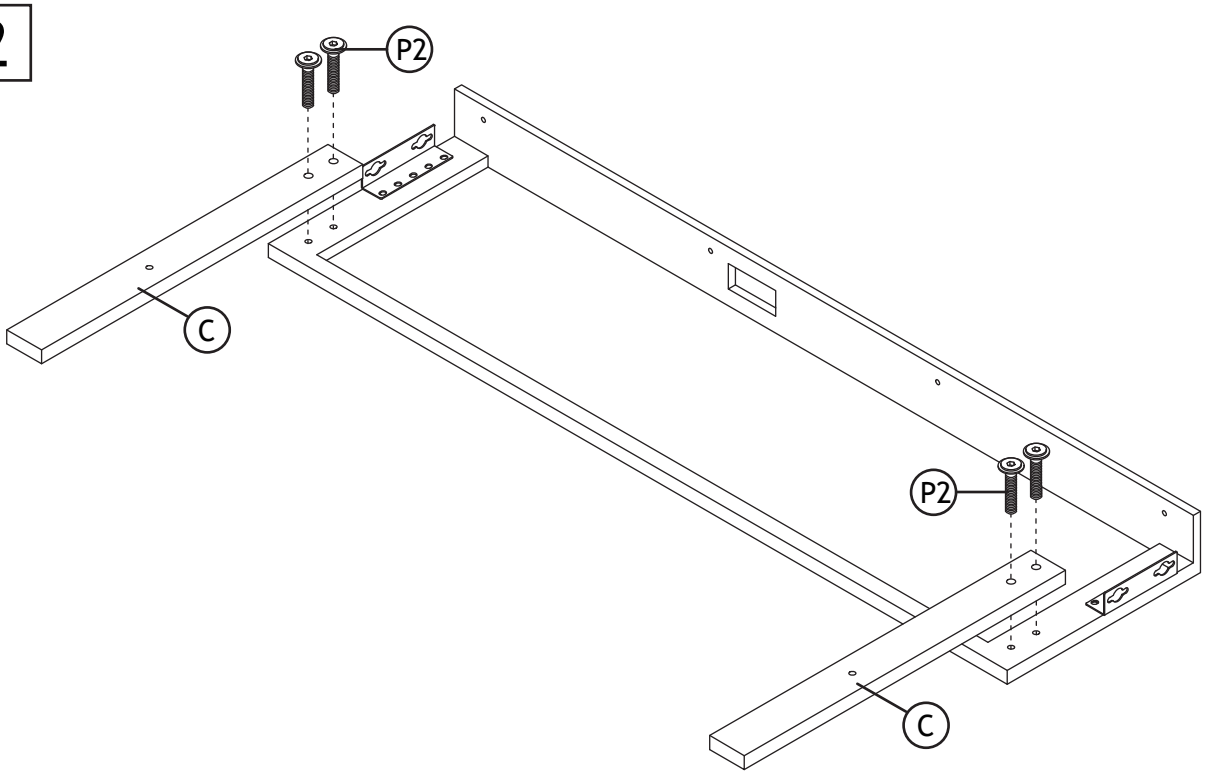

3

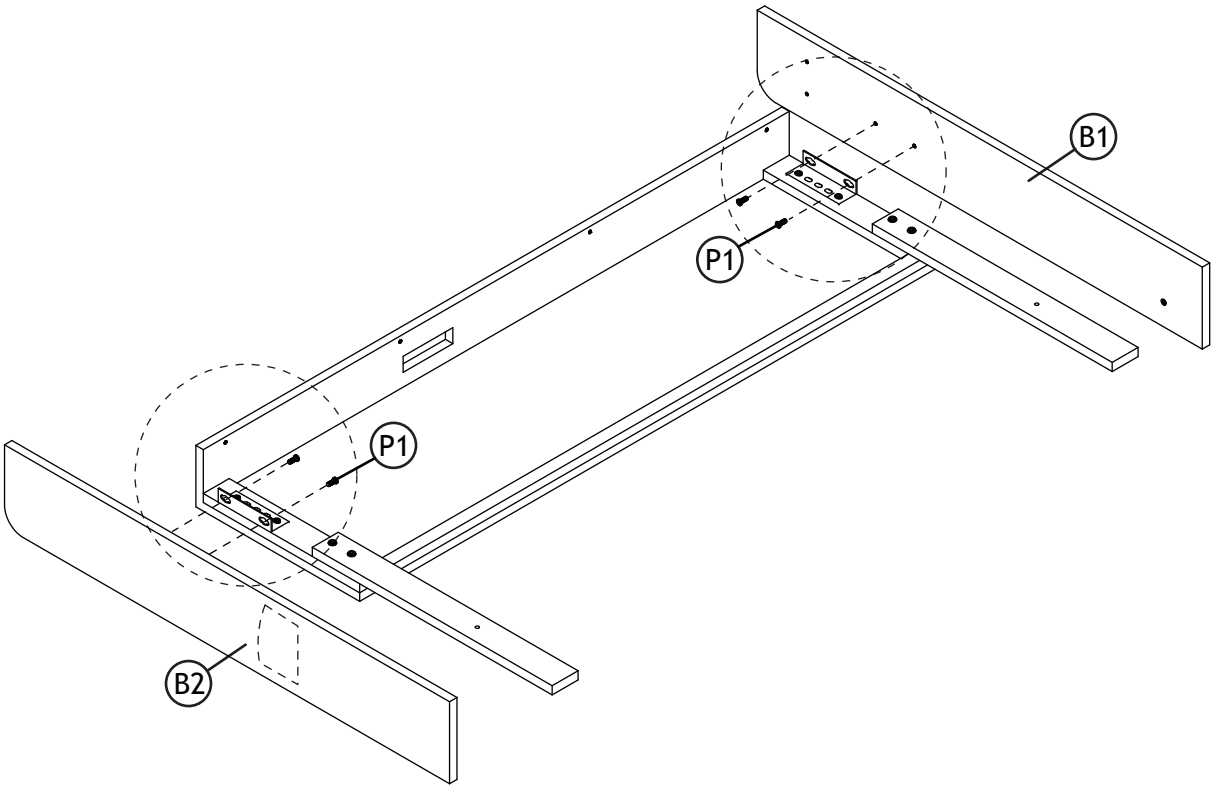

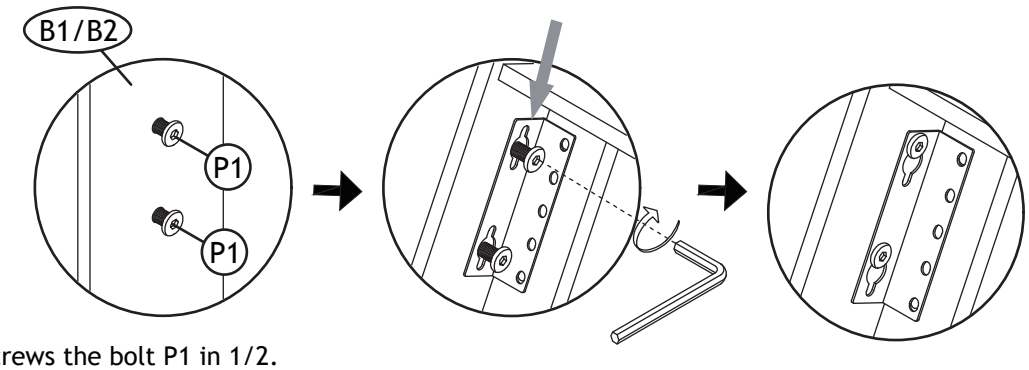

Screws the bolt P1 in 1/2.

4

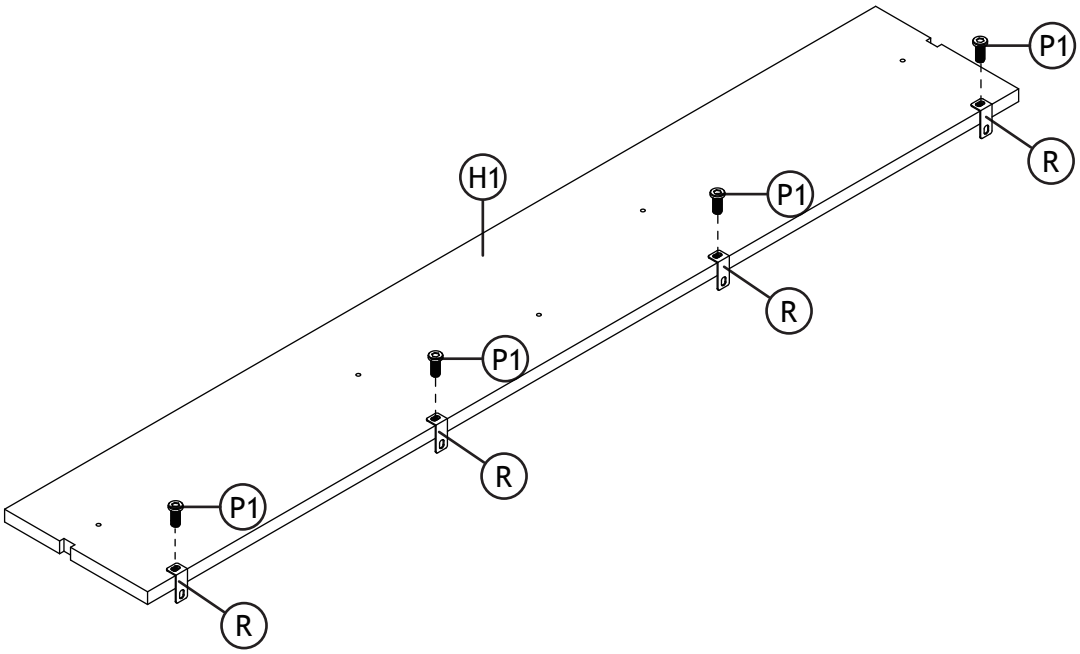

5

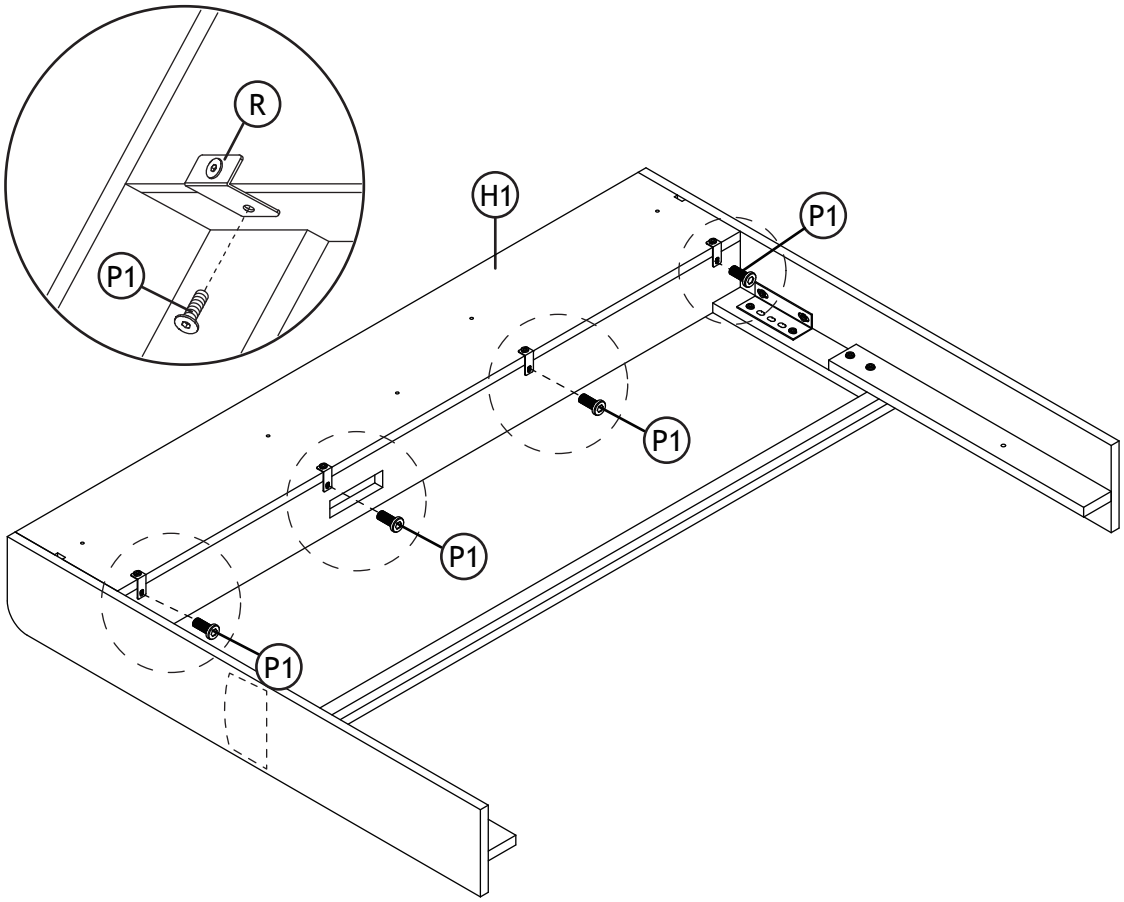
R
P1
H1
P1
P1
P1
P1

6

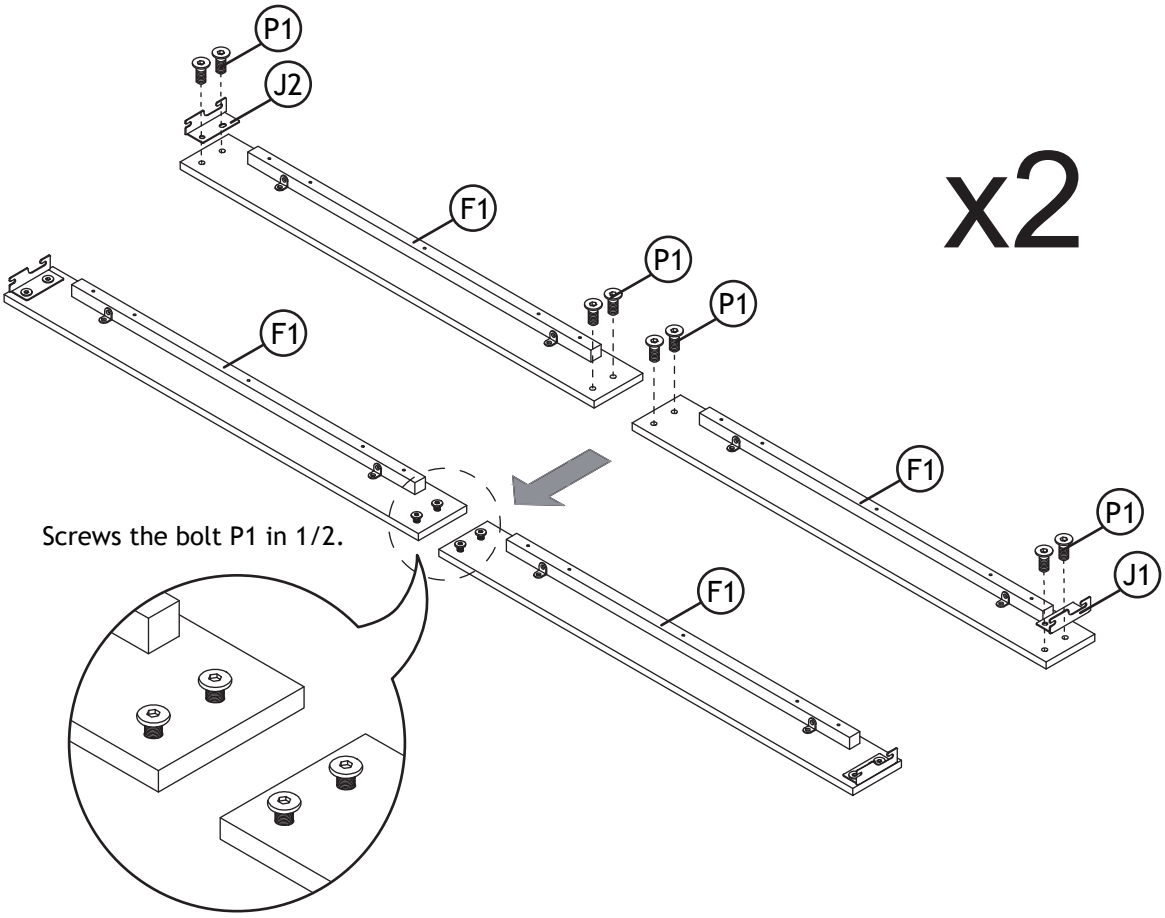
P1
J2
F1
x2
P1
P1
F1
F1
P1
J1
F1
Screws the bolt P1 in 1/2.

7

x2

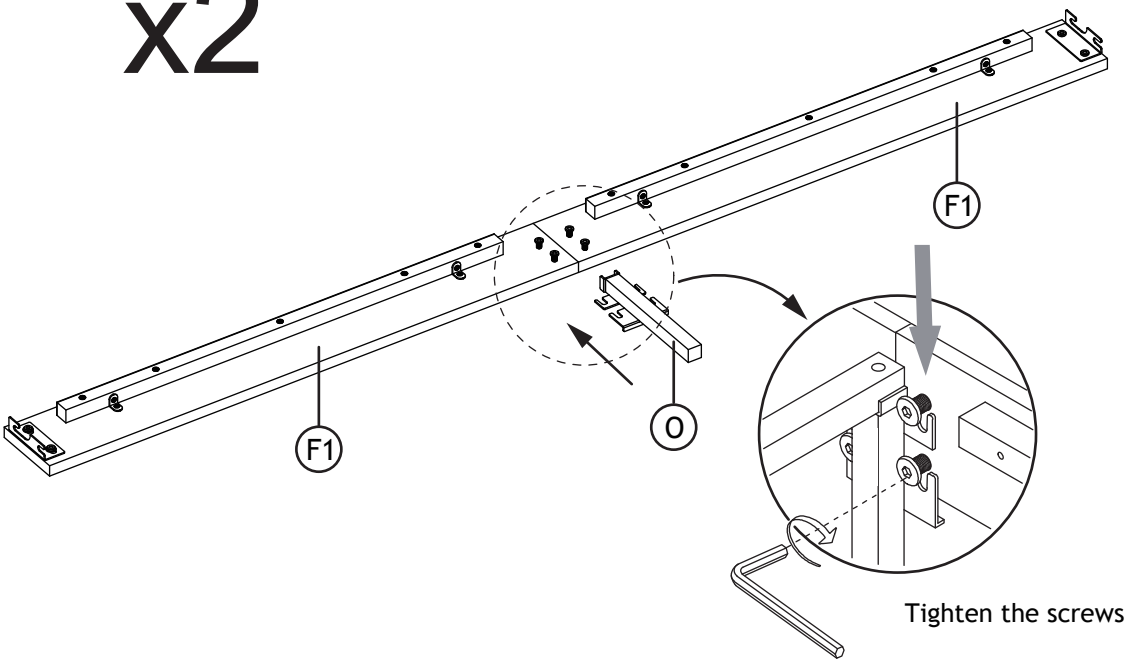

8

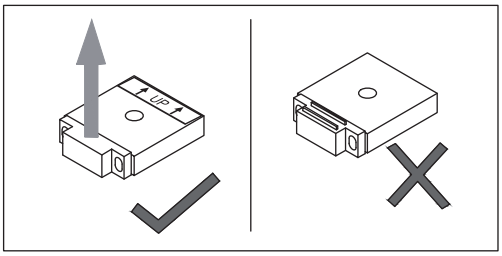

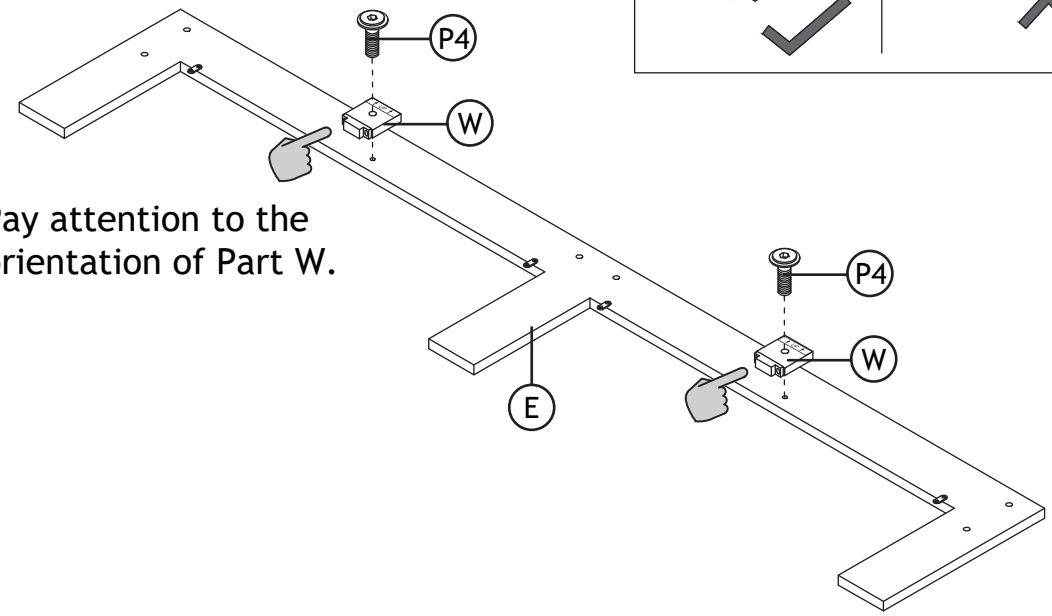

Pay attention to the orientation of Part W.

9

Screws the bolt P1 in 1/2.

P1

P1

Tighten the screws

P1

P1

10

P2

P1

Screws the bolt P1&P2 in 1/2.

Tighten the screws.

P2

P1

P2

P1

11

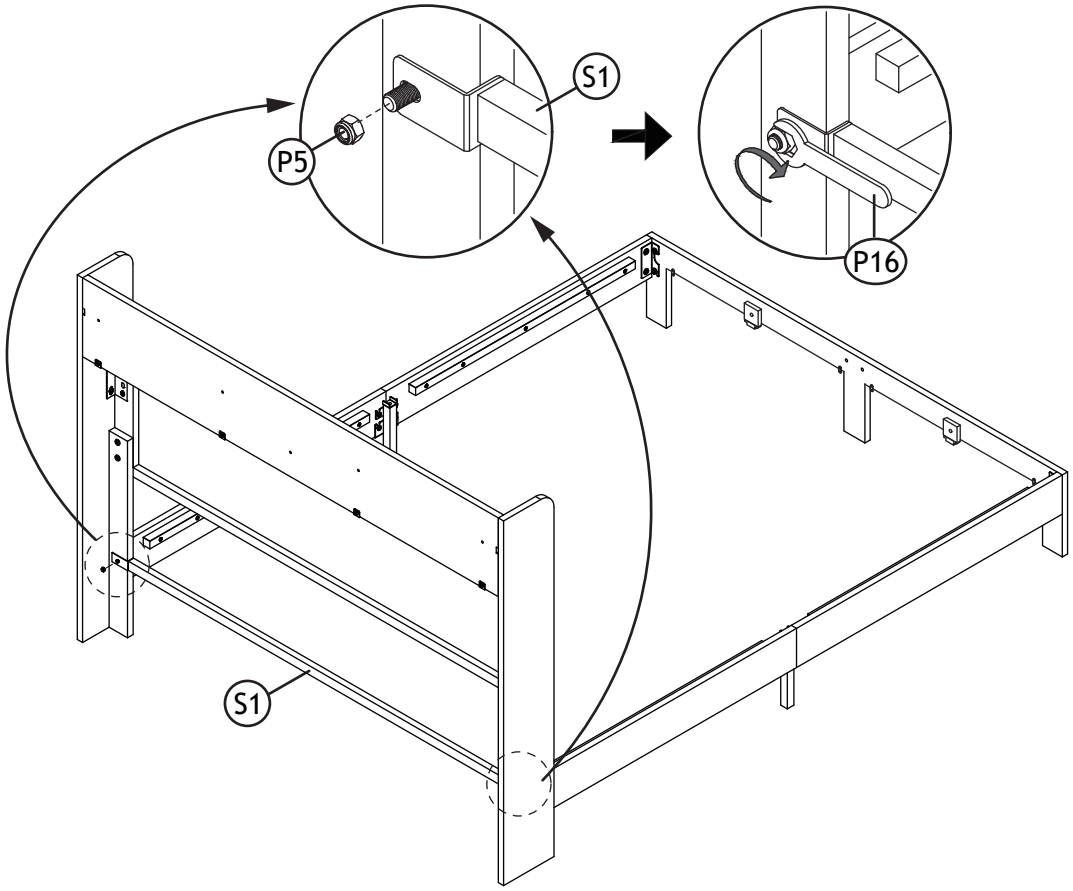

12

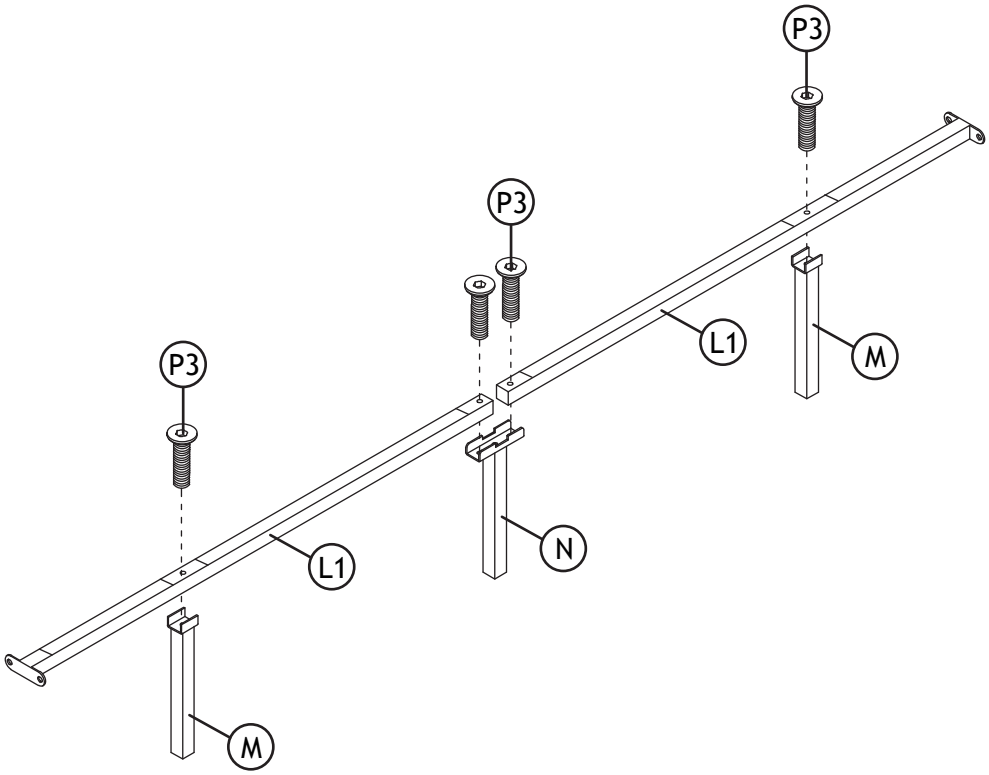

13

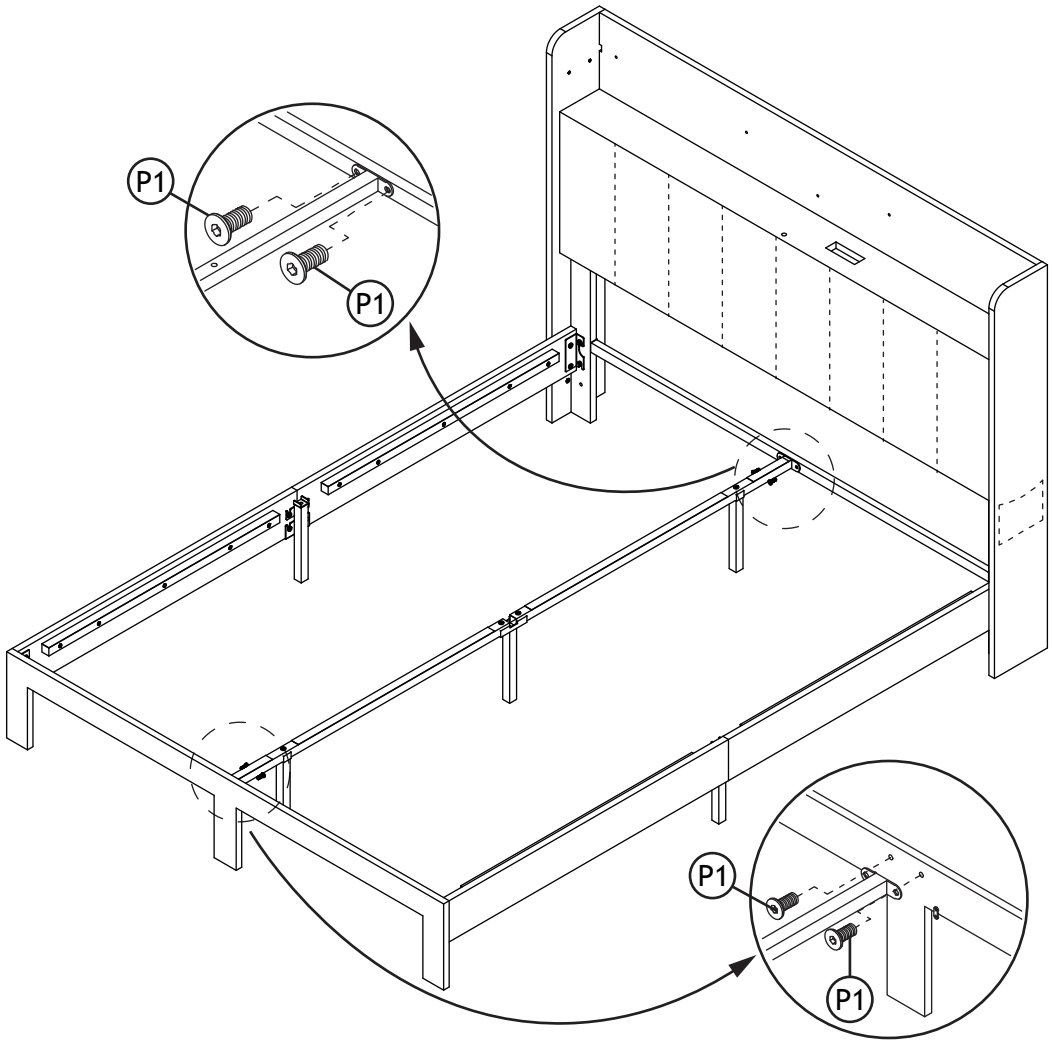

14

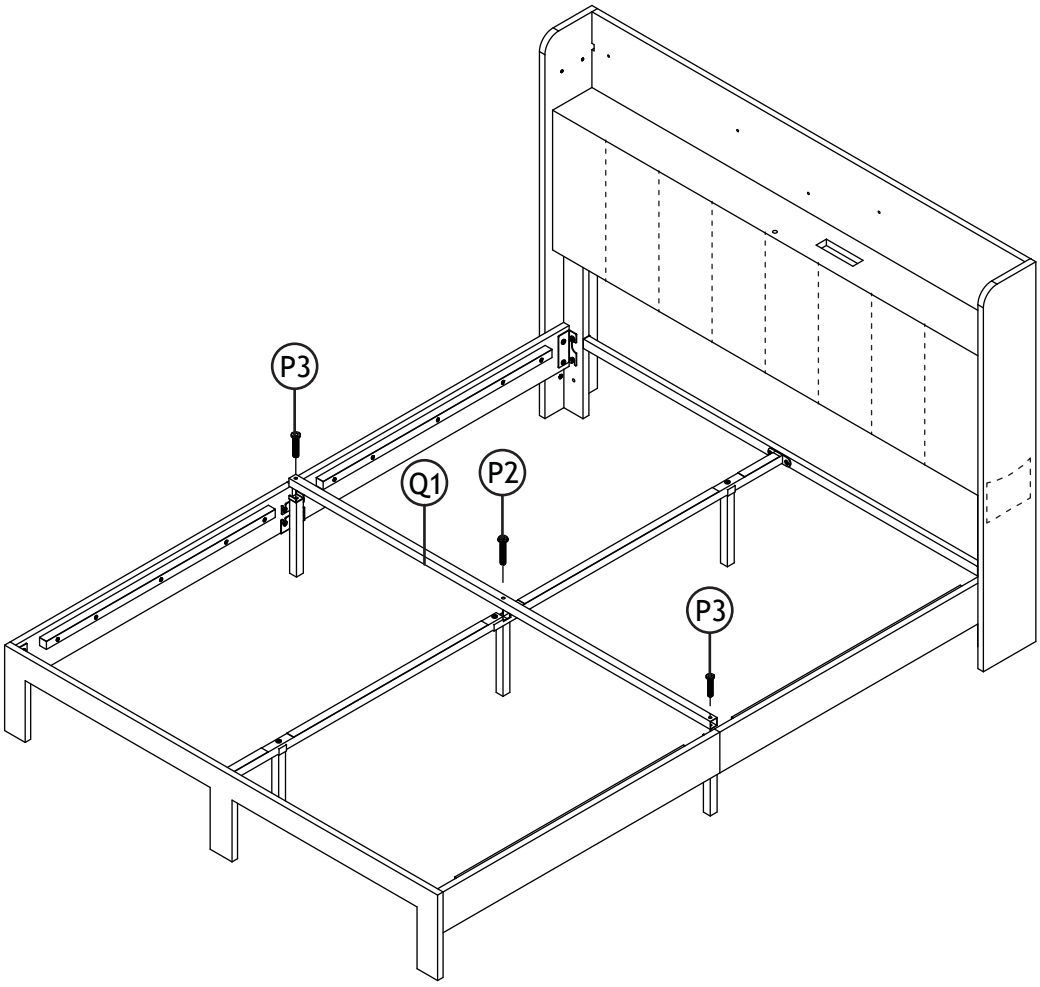

15

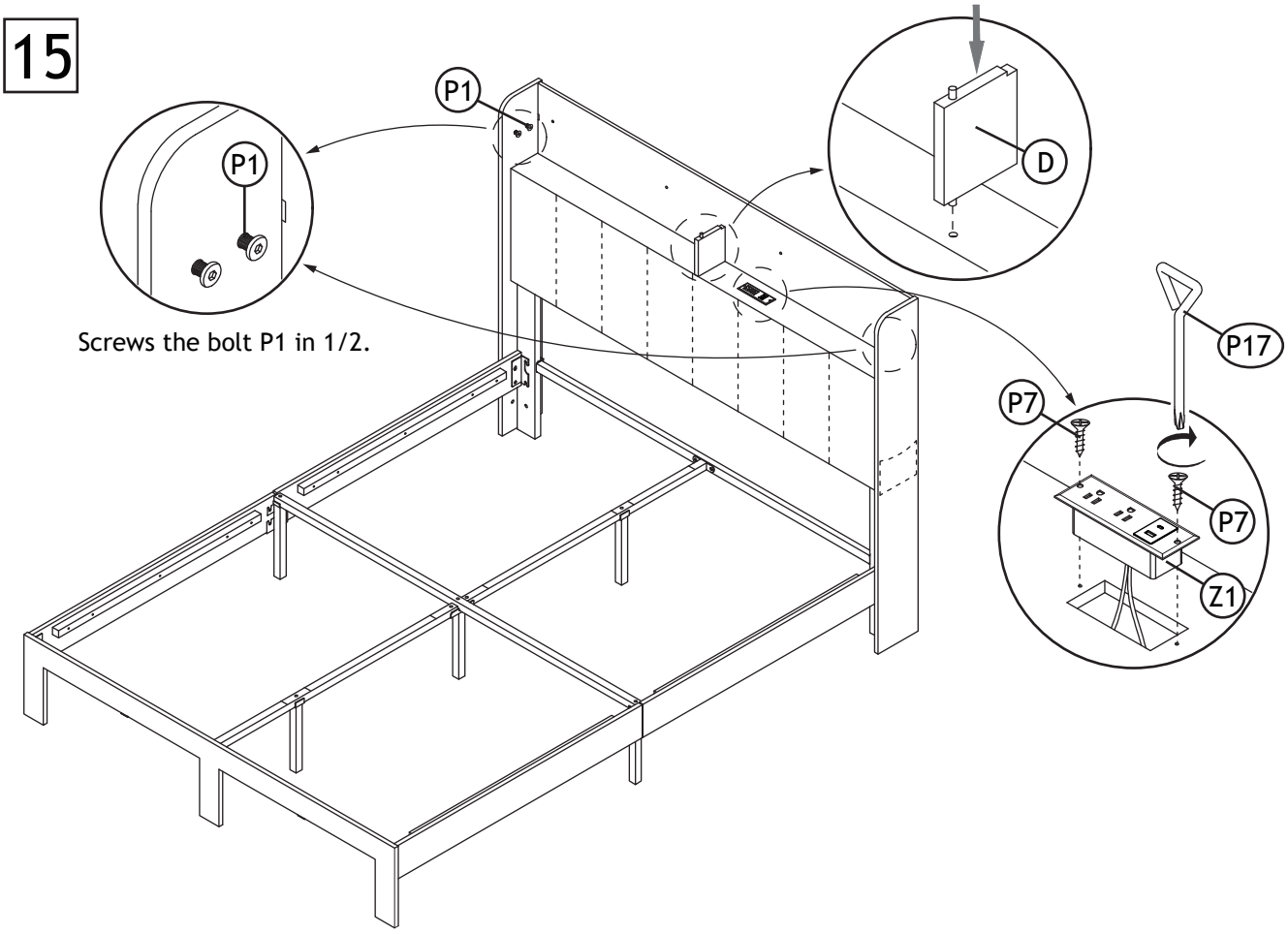

Screws the bolt P1 in 1/2.

16

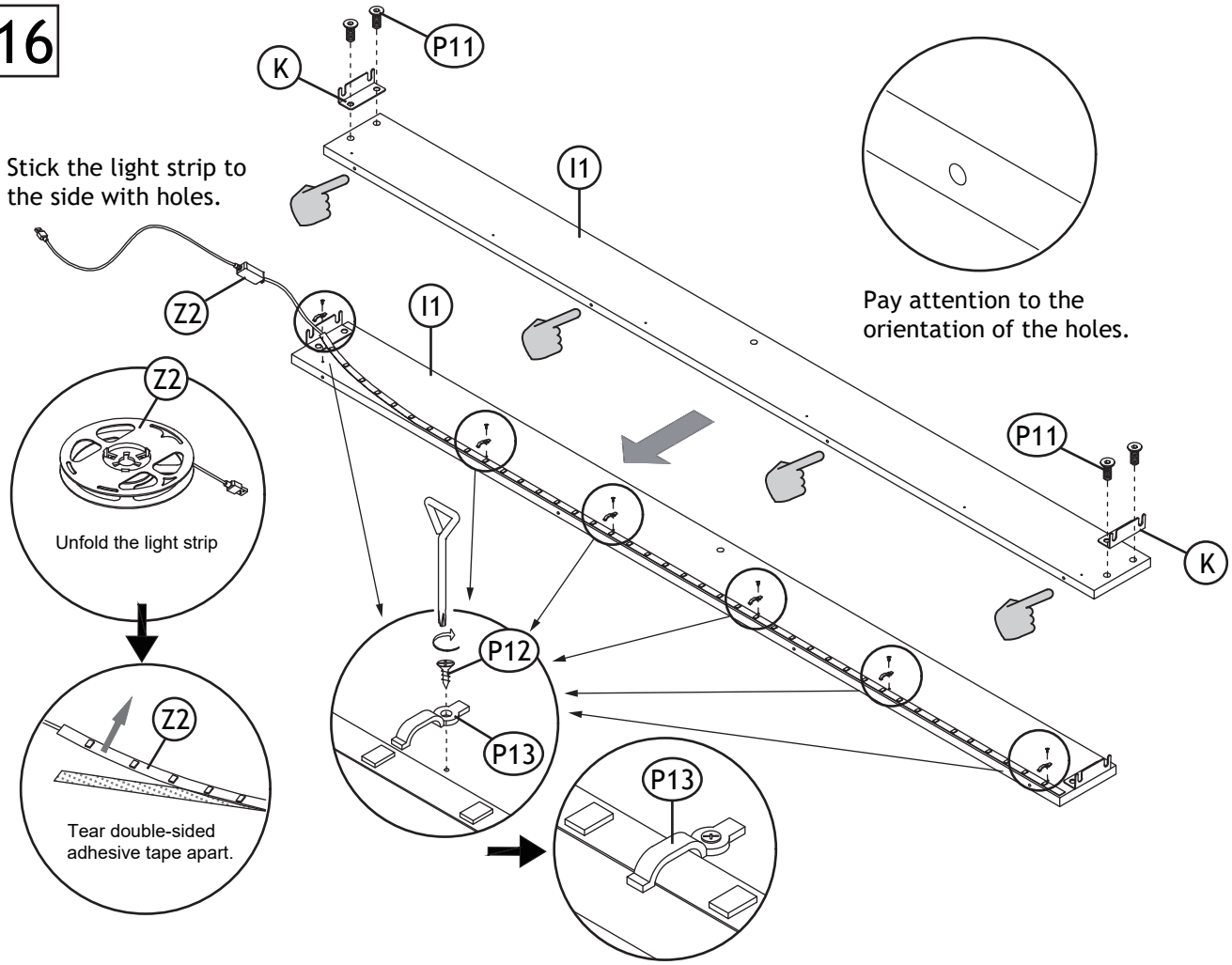

Stick the light strip to the side with holes.

Pay attention to the orientation of the holes.

Unfold the light strip

Tear double-sided adhesive tape apart.

17

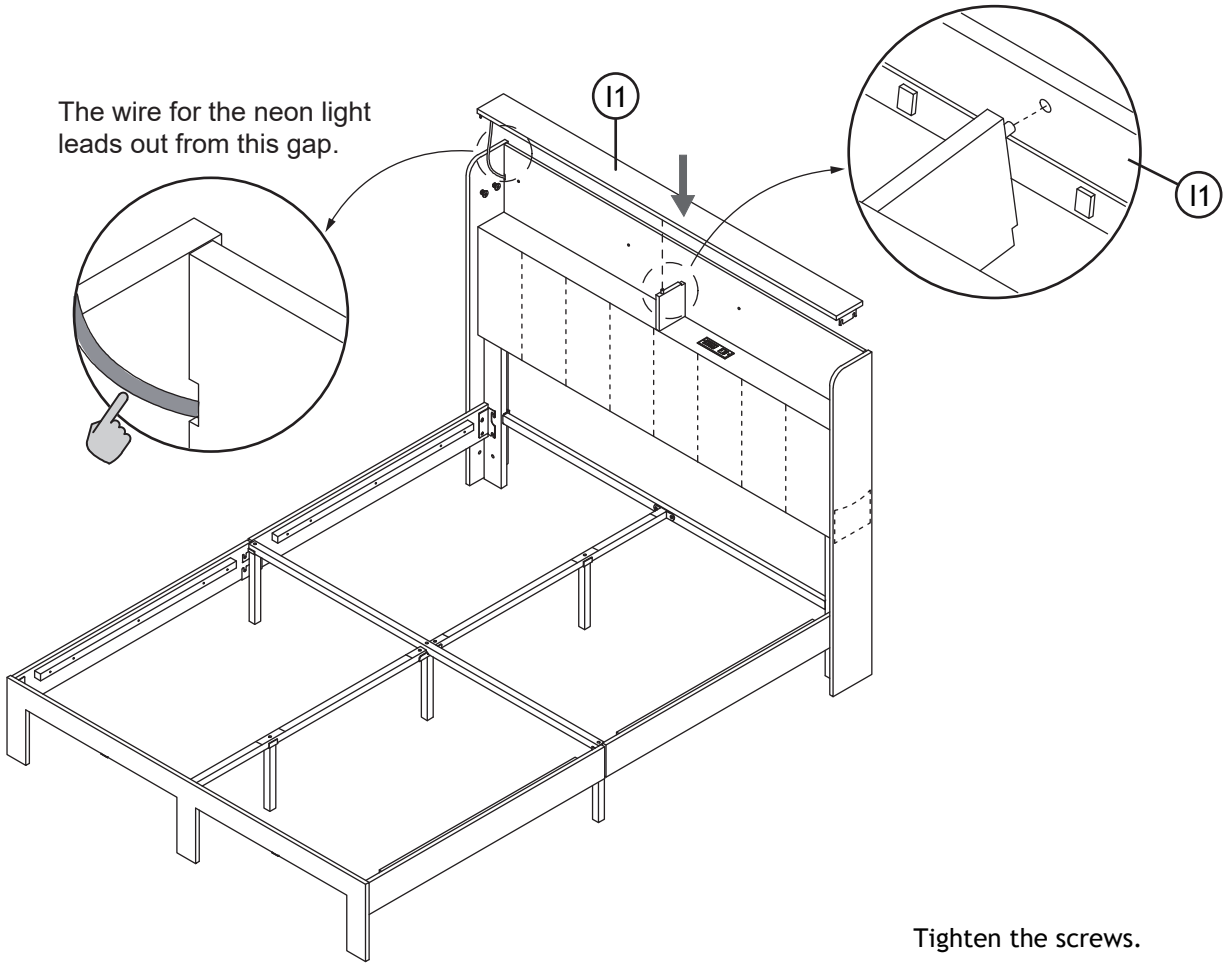
The wire for the neon light leads out from this gap.
I1
I1

18

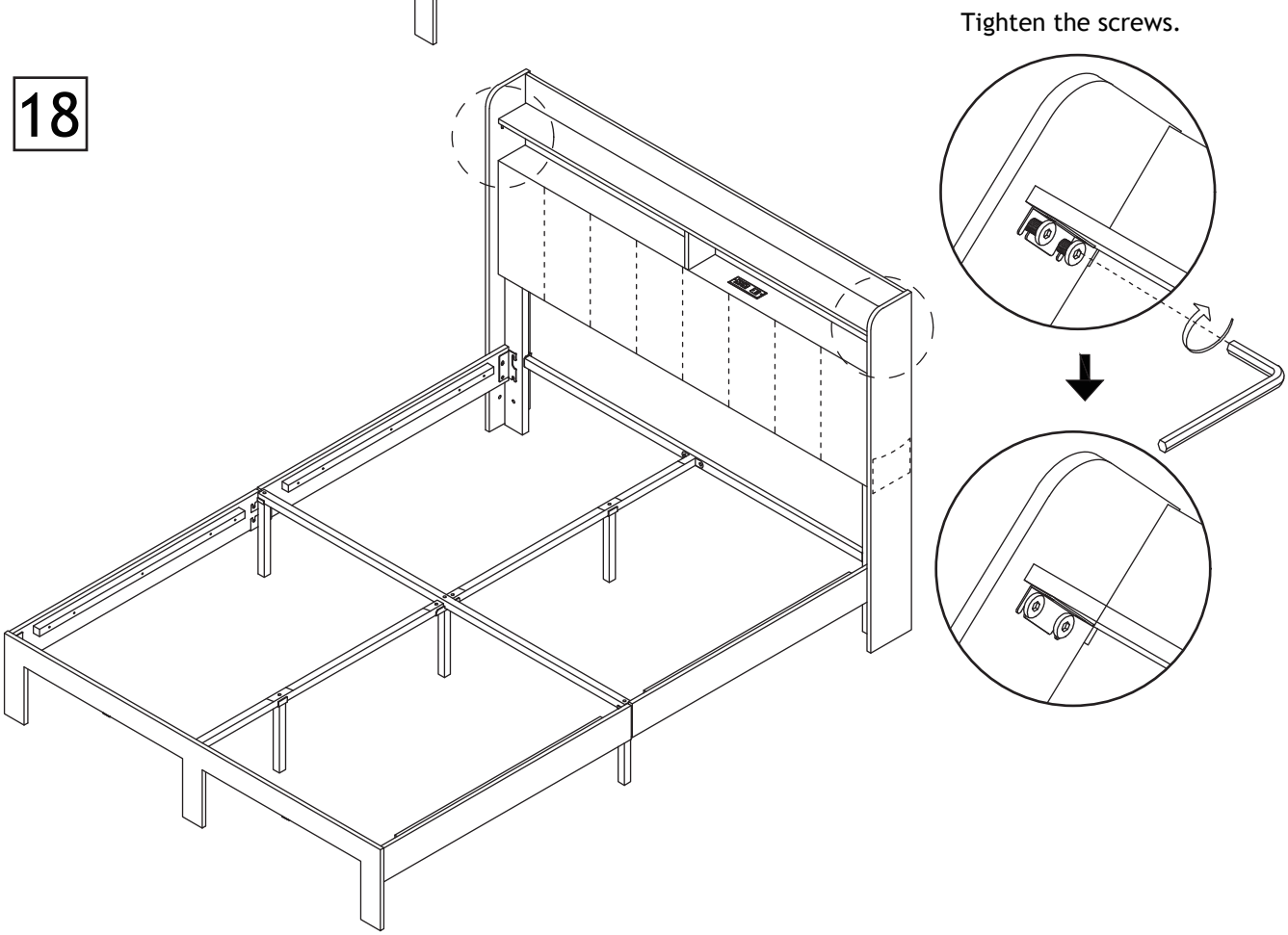
Tighten the screws.

19

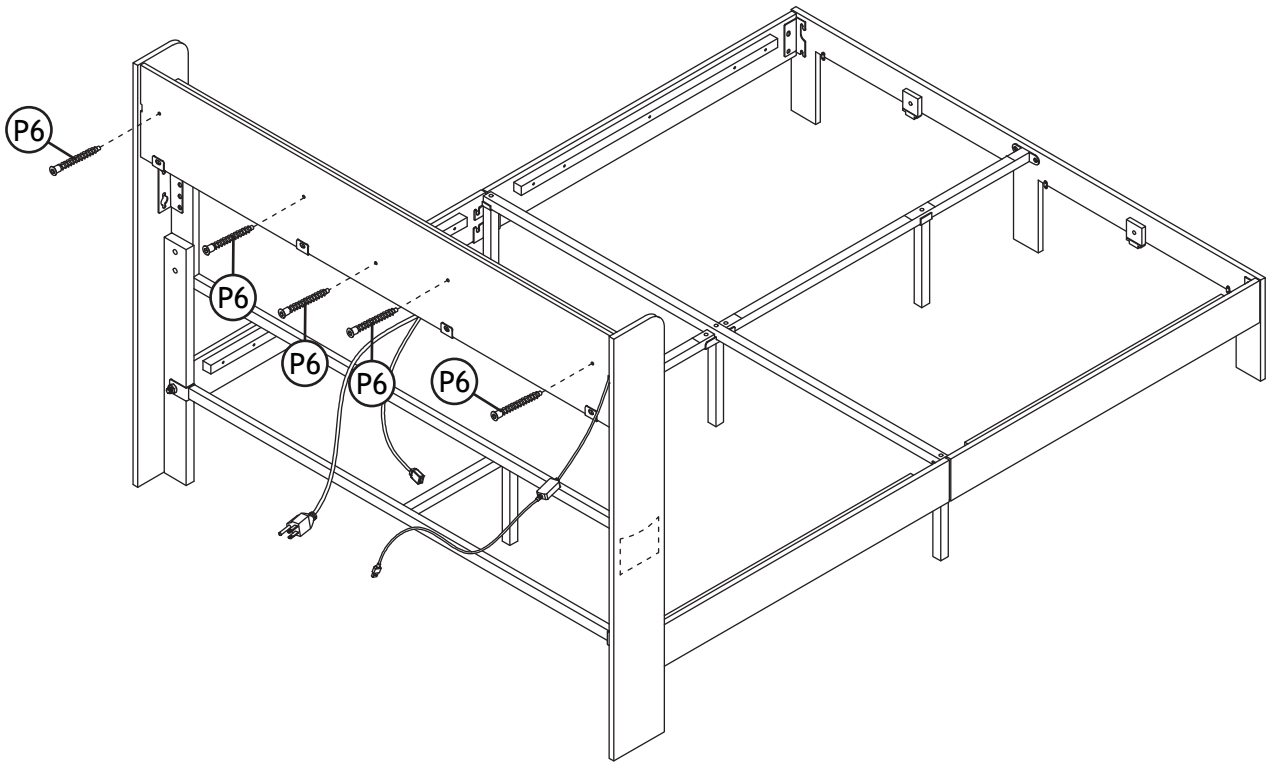

20

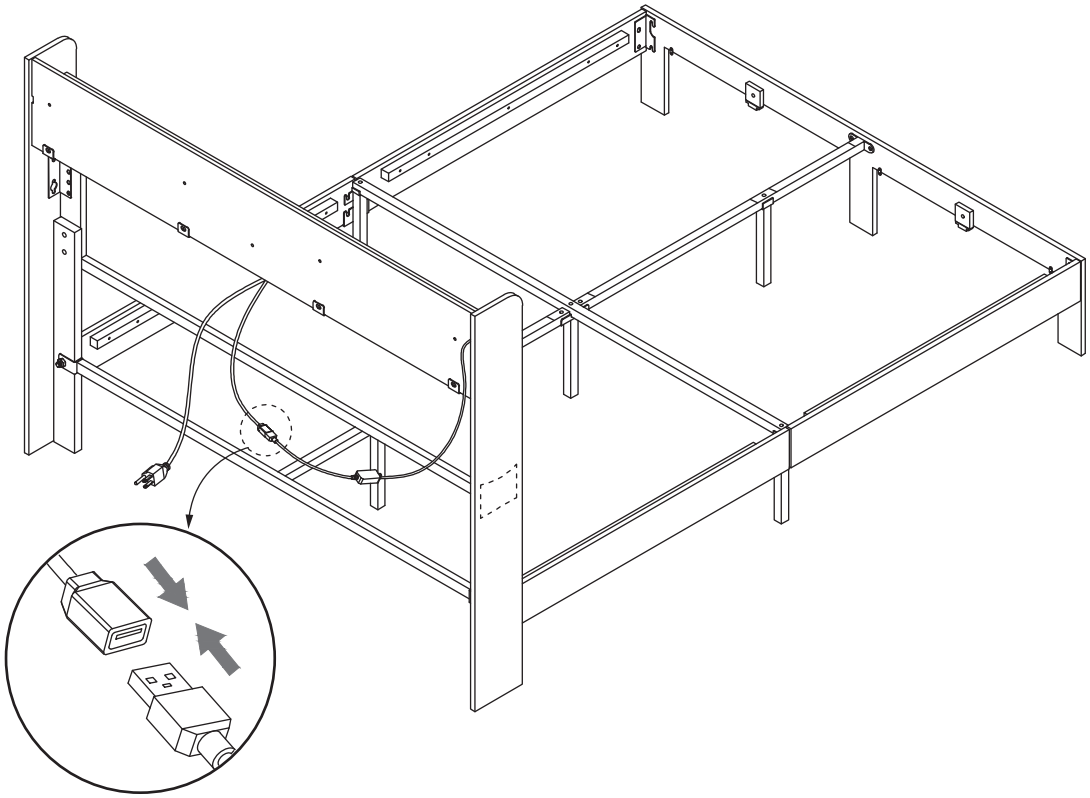

21

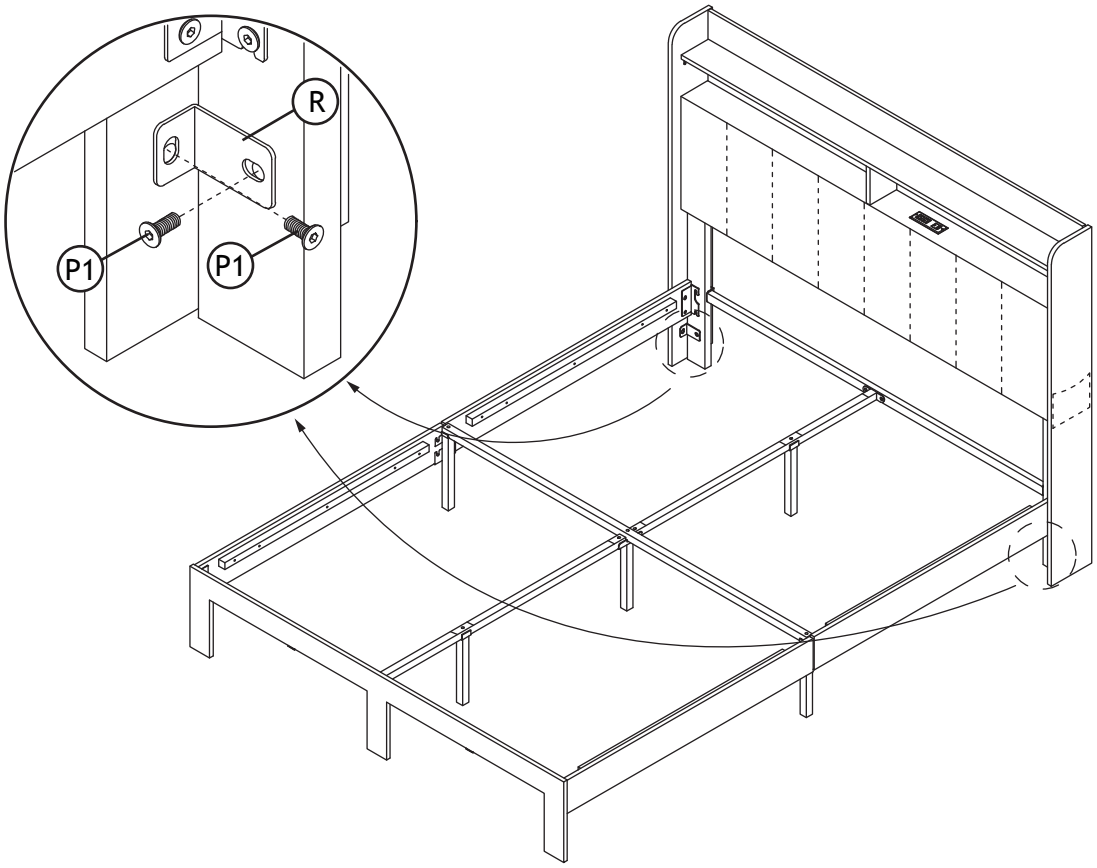

22

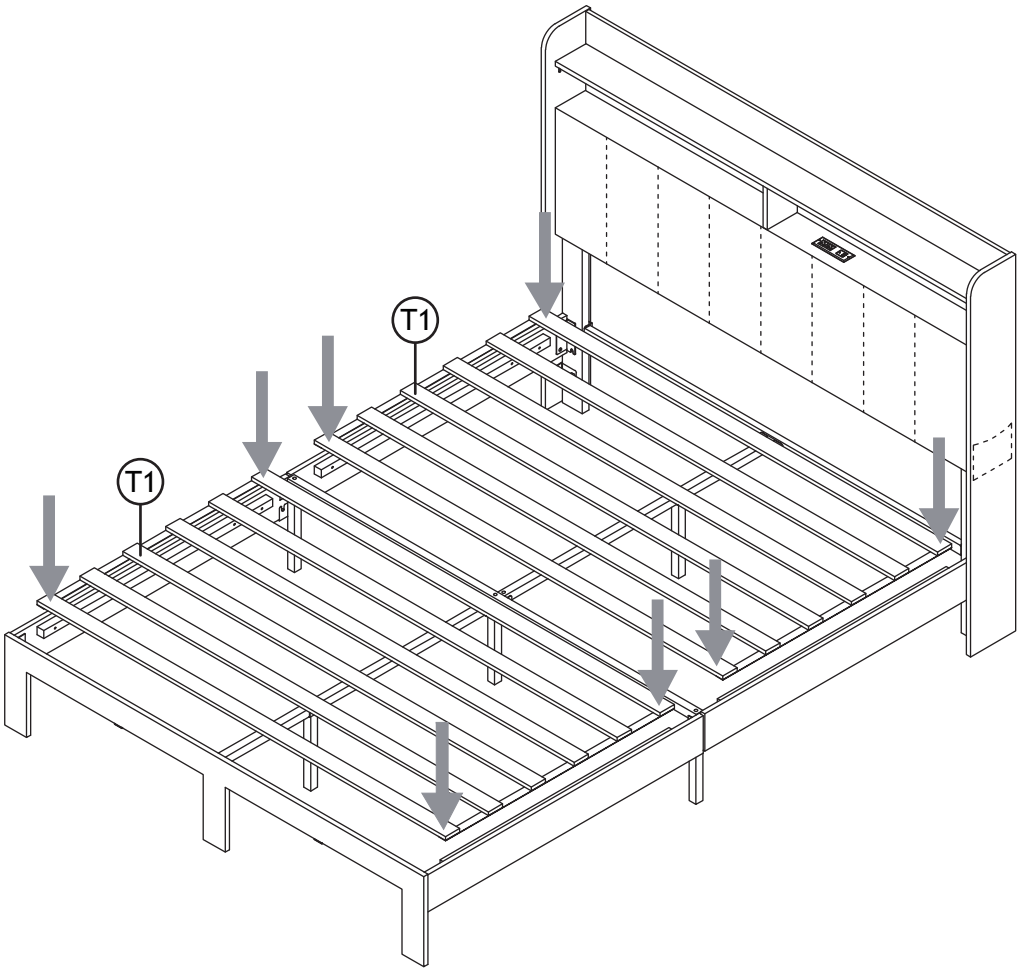

23

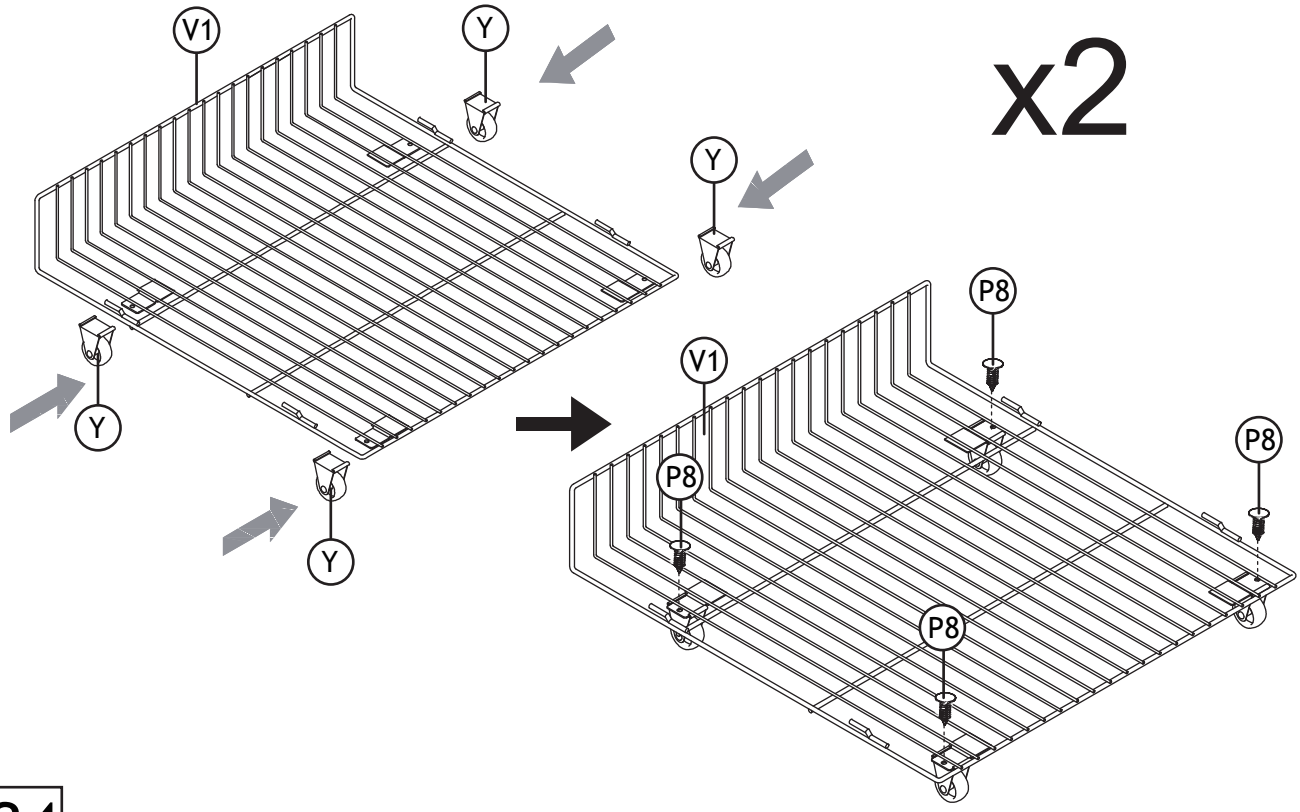

24

Step1

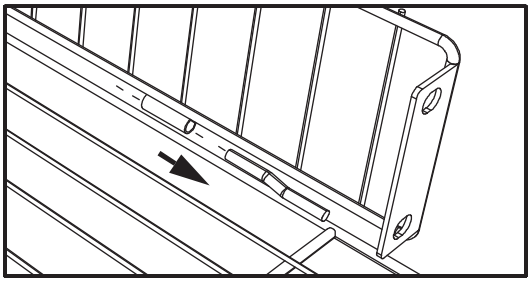

Step2

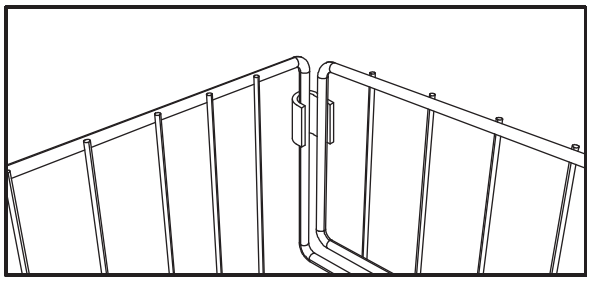

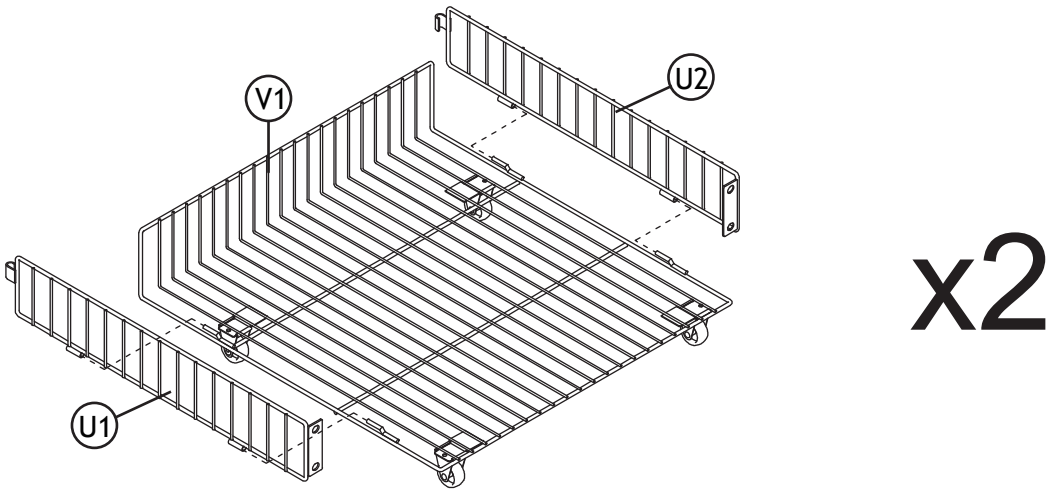

25

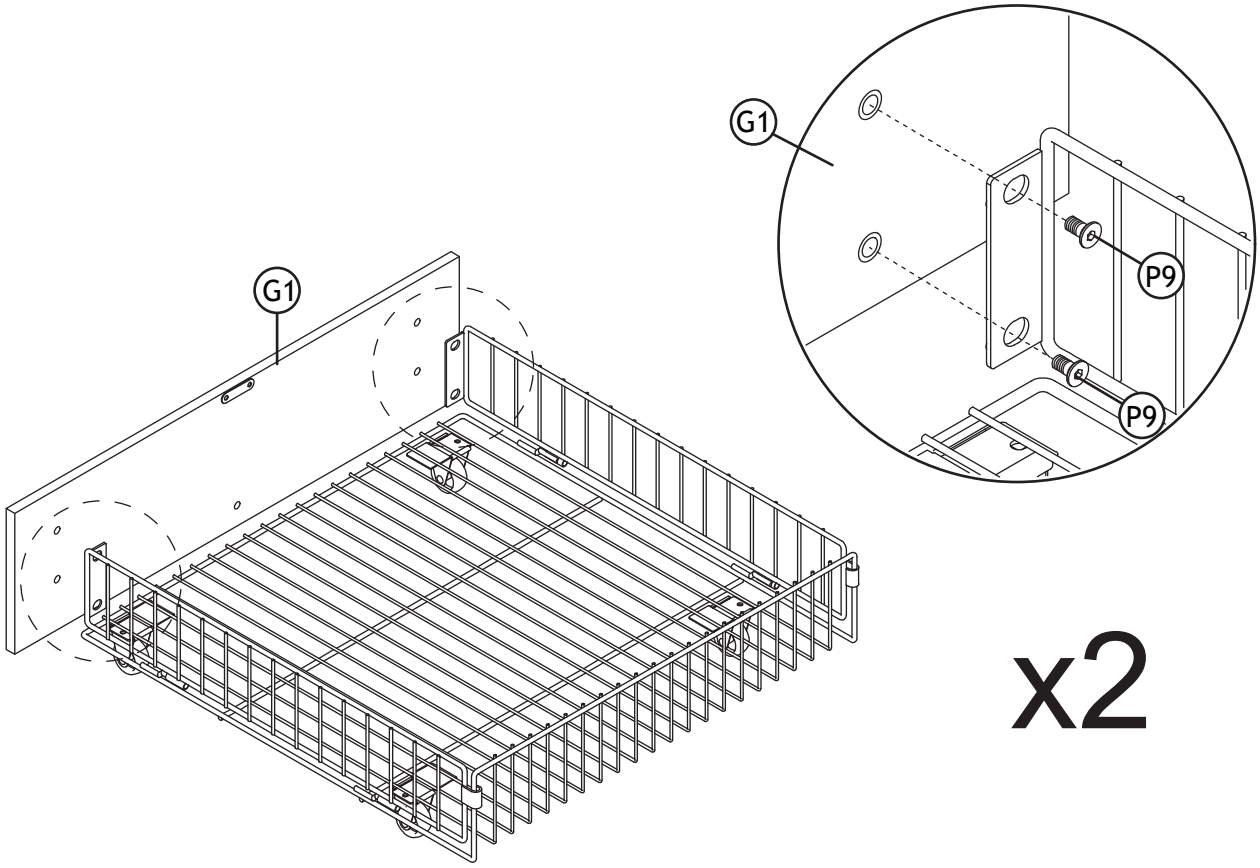

26

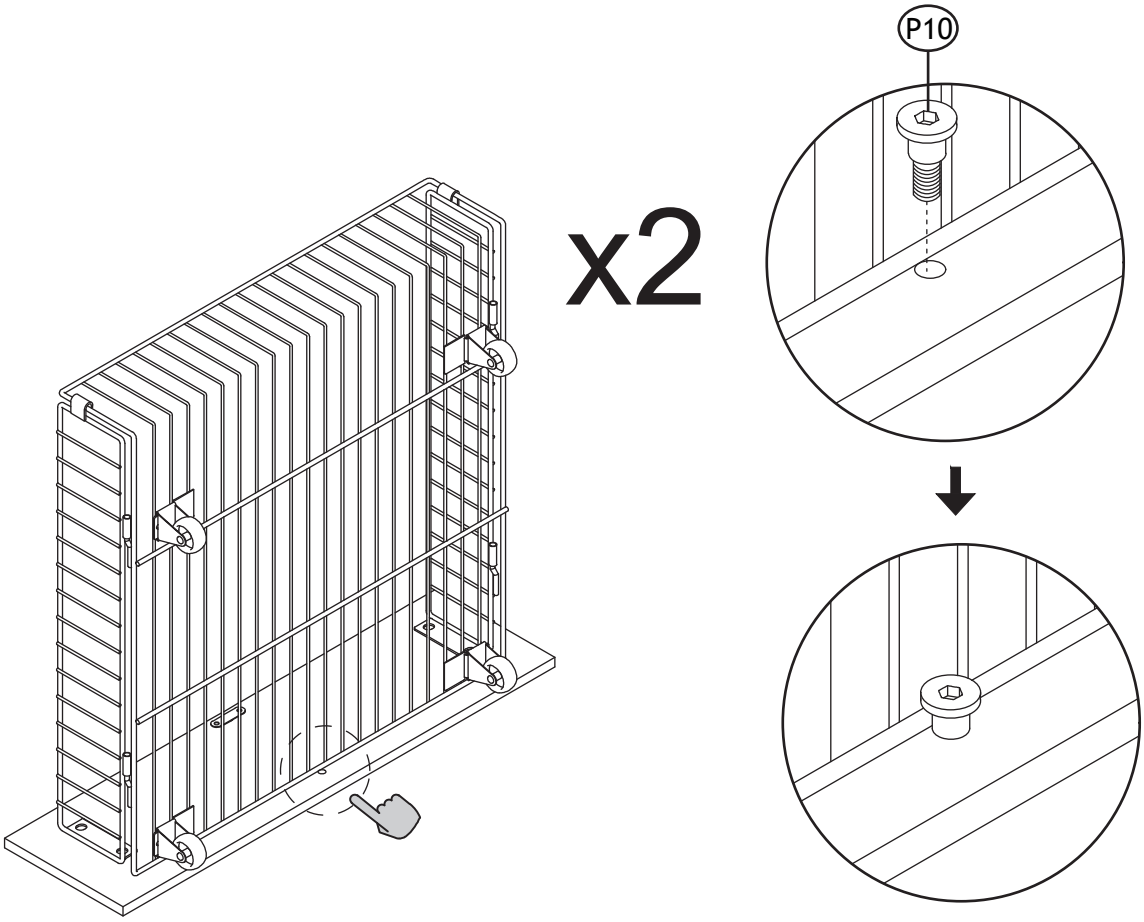

27

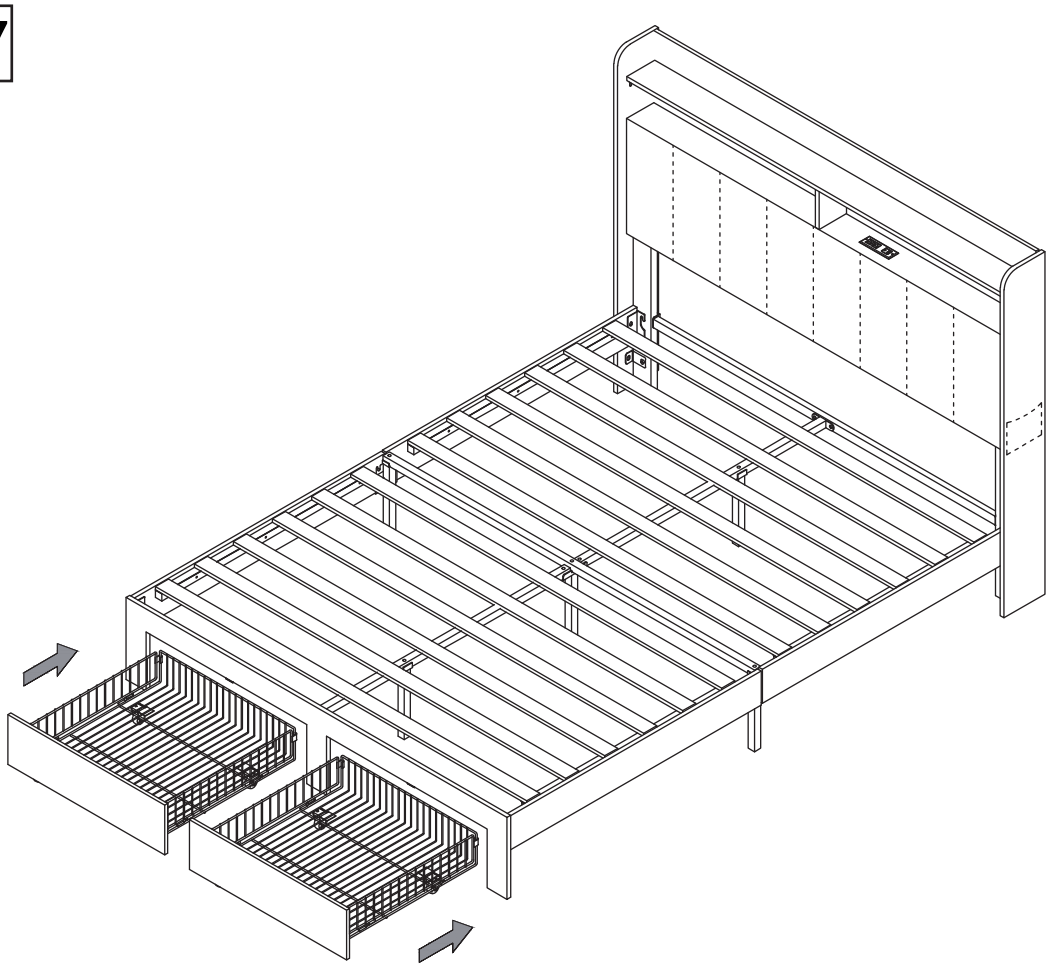

28

Before using the light strip remote control,
remove the plastic pad as shown in the picture.

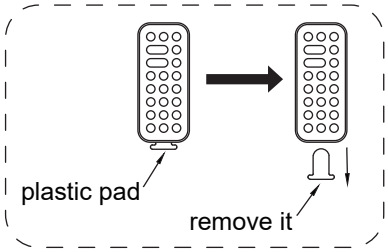

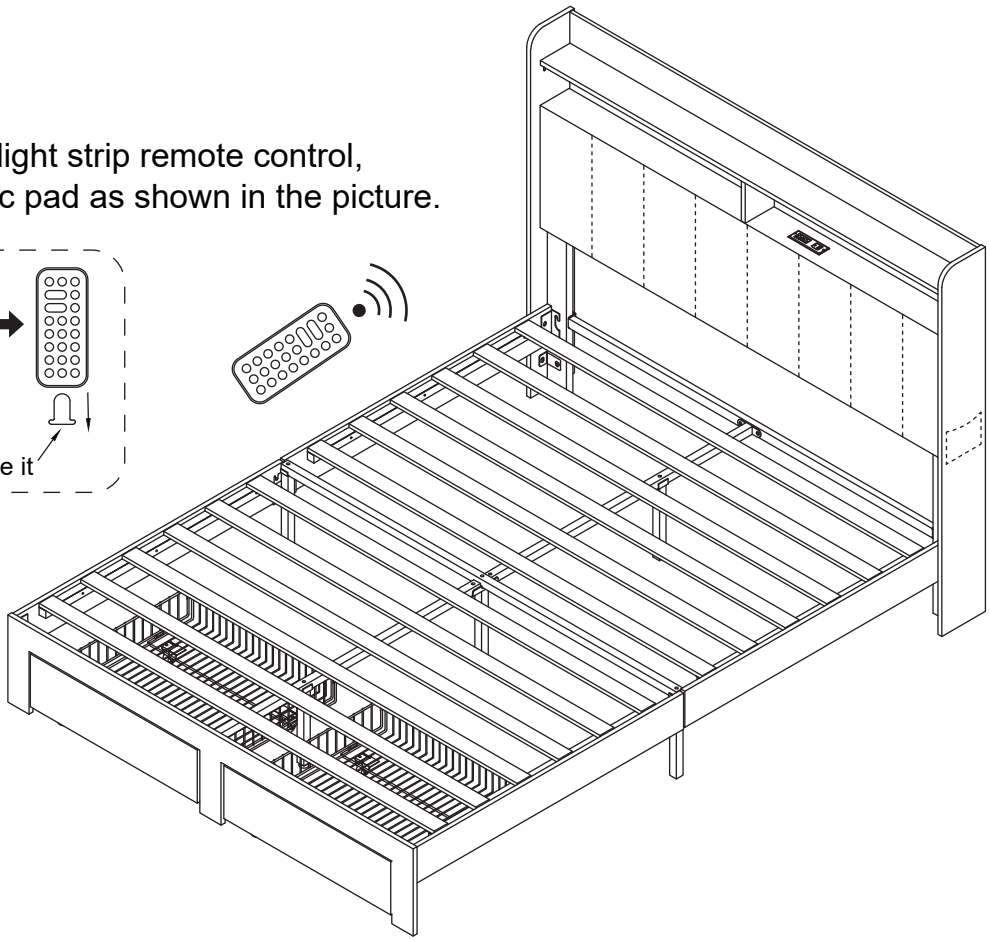

Made in China