# ASSEMBLY INSTRUCTIONS
# 7 DRAWER DRESSER

ASSEMBLY REQUIREMENTS:

2-Person Assembly

2.5Hours Assembly Time (Approximate)

Tool Required (Not Provided)

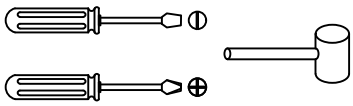

We appreciate your business!

**ASSEMBLY PREPARATION:**

1 .Remove all packaging materials, staples and packing straps from the carton.
2 .Refer to Part List and Hardware List and ensure parts and hardware are correct before assembly. Contact customer service for missing parts.
3 .Place all wooden parts on clean ,flat and soft surface (e.g. carpet or rug )to prevent scratch and damage to parts.

**SAFETY PRECAUTION:**

1 .Keep ALL HARDWARE PART OUT OF REACH OF CHILDREN.
2 .DISPOSE PLASTIC PACKAGING MATERIAL IMMEDIATELY TO AVOID ANY RISK OF SUFFOCATION TO CHILDREN AND ANIMALS

**TIPS FOR ASSEMBLY:**

1 .Allow ample room for assembly and assemble the product near where the product will be placed.
2.Assemble the product on a surface that does not scratch or damage the exterior gloss and finish of the furniture.
3 .Identify all the parts ,hardware and quantities required for each step.
4 .During assembly ,do not over–tighten any fittings as this may cause damage.
5 .DO NOT USE POWER TOOLS TO ASSEMBLE THIS PRODUCT.
6 .Always place the product on a flat ,level surface.
7 .Do not sit or stand on the partially assembled product; only use the product for which it is intended.

**CARE AND MAINTENANCE:**

- Wipe clean with a soft, dry cloth; avoid the use of harsh chemicals or household cleaners as they may damage the exterior finish of the furniture.
- **Hardware may loosen over time. Periodically, check that all connections are tight; re–tighten as necessary.**
- Solid wood is impacted by heat and humidity fluctuations which may cause small joint separations or hairline cracks; place the furniture away from direct sunlight and air conditioning vents, heating vents or units to protect the furniture.

## PARTS LIST

| NO | PART NAME | QTY |
|---|---|---|
| 1 | TOP PANEL | 1 |
| 2 | LEFT PANEL | 1 |
| 3 | RIGHT PANEL | 1 |
| 4 | BOTTOM FRAME | 1 |
| 5 | CENTER RAIL | 2 |
| 6 | BIG PARTITION | 1 |
| 7 | LEG | 4 |
| 8 | SIDE BACK PANEL | 2 |
| 9 | CENTER BACK PANEL | 1 |
| 10 | SMALL PARTITION | 2 |
| 11 | SUPPORT STAND | 1 |
| 101 | TOP DRAWER FRONT PANEL | 2 |

| NO | PART NAME | QTY |
|---|---|---|
| 102 | TOP DRAWER LEFT PANEL | 3 |
| 103 | TOP DRAWER BACK PANEL | 2 |
| 104 | TOP DRAWER BASE PANEL | 2 |
| 105 | TOP DRAWER RIGHT PANEL | 3 |
| 106 | CENTER DRAWER FRONT PANEL | 1 |
| 107 | CENTER DRAWER BACK PANEL | 1 |
| 108 | CENTER DRAWER BASE PANEL | 1 |
| 109 | BOTTOM DRAWER FRONT PANEL | 4 |
| 110 | BOTTOM DRAWER LEFT PANEL | 4 |
| 111 | BOTTOM DRAWER BACK PANEL | 4 |
| 112 | BOTTOM DRAWER BASE PANEL | 4 |
| 113 | BOTTOM DRAWER RIGHT PANEL | 4 |

## PARTS ASSEMBLY OVERVIEW

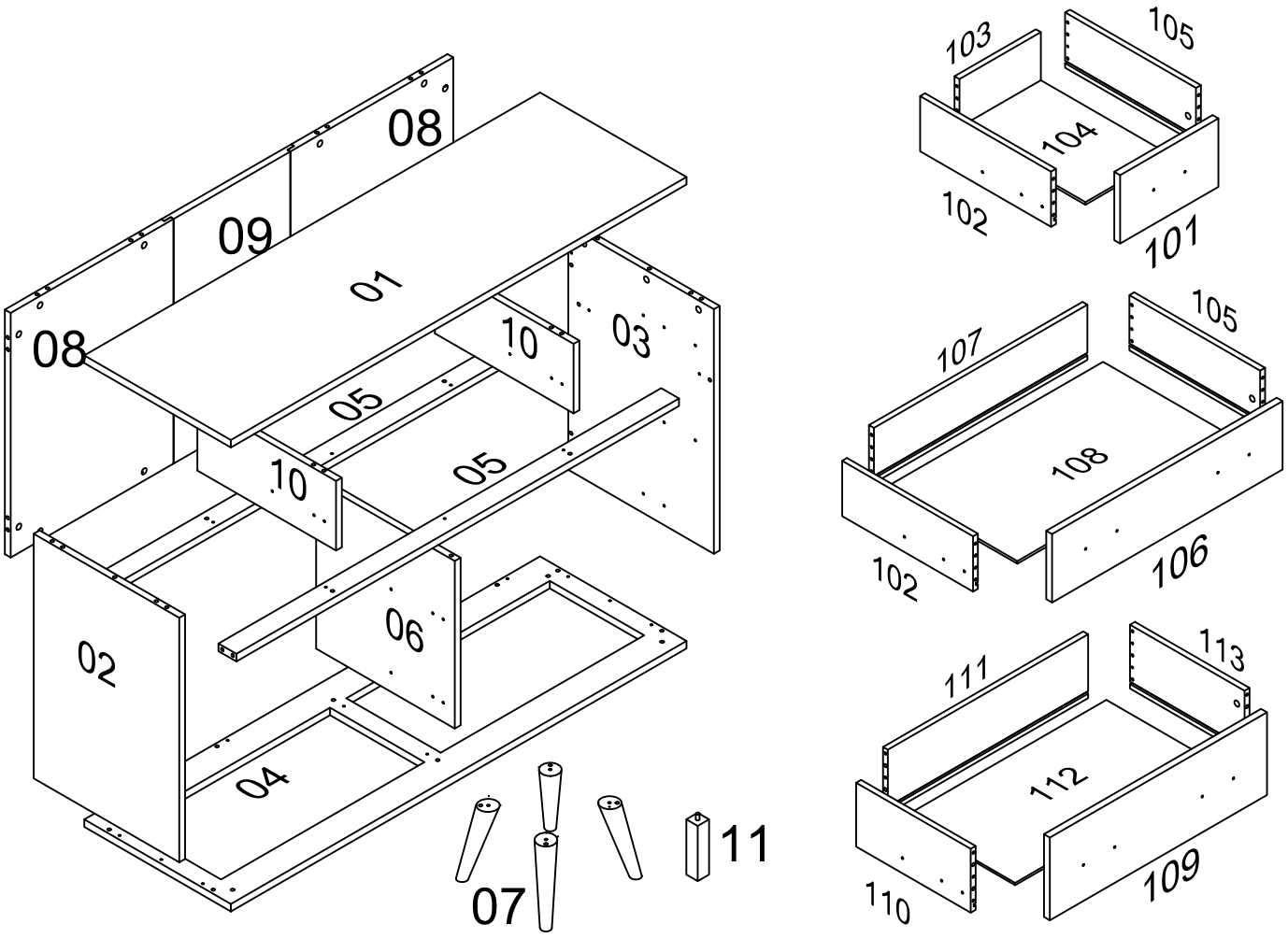

# HARDWARE LIST

| NO | DESCRIPTION | | QTY | EXTRA |
|---|---|---|---|---|
| A | | CHIPBOARD SCREW M4 x 16MM | 84 | 1 |
| B | | PANCHIPBOARD SCREW M4 x 16MM | 4 | 1 |
| C | | WOOD DOWEL M8 x 35MM | 40 | 1 |
| D | | WOOD DOWEL M6 x 30MM | 84 | 1 |
| E | | CAM-LOCK 15 x 12 | 70 | 1 |
| F | | CAM-BOLT 5 x 25 | 70 | 1 |
| G | | CAM-LOCK COVER 17 x 5 | 70 | 1 |
| H1 | | DRAWER SLIDE 250MM | 7 SET | |
| H2 | | | | |

**EXTRA HARDWARE FOR SPARE USE

| NO | DESCRIPTION | | QTY | EXTRA |
|---|---|---|---|---|
| I | | HANDLE | 12 | |
| J | | PANHEAD SCREW M4 x 22MM | 24 | |
| K | | CHIPBOARD SCREW M4 x 38MM | 14 | 1 |
| L | | SPRING WASHER M8 | 4 | 1 |
| M | | FLAT WASHER M8 | 4 | 1 |
| N | | HEX NUT M6 | 4 | 1 |
| O | | WRENCH | 1 | 1 |
| Z | | Anti-Tipping Kit | 2 | |

DRAWER SLIDE DISASSEMBLE STEPS:

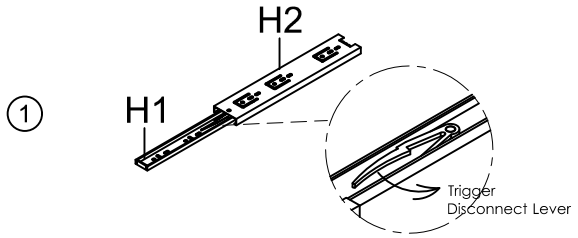


A) Distinguish between Slide Track (H2) and Slide Runner (H1) of Drawer Slide.
B) Slide out H1 from H2 until Trigger Disconnect Lever is visible.
C) Depress the Trigger Disconnect Lever in the groove of H1 and at the same time slide out H2 completely from H1.

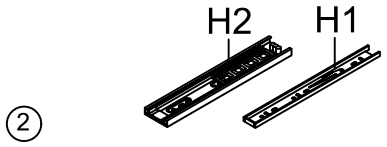

# PARTS IN BOX 1

| | | | | | |
|---|---|---|---|---|---|
| NAME: | LEFT PANEL | QTY: | 1Pc | CODE: | 2 |
| NAME: | RIGHT PANEL | QTY: | 1Pc | CODE: | 3 |
| NAME: | BIG PARTITION | QTY: | 1Pc | CODE: | 6 |
| NAME: | LEG | QTY: | 4Pcs | CODE: | 7 |
| NAME: | SIDE BACK PANEL | QTY: | 2Pcs | CODE: | 8 |
| NAME: | CENTER BACK PANEL | QTY: | 1Pc | CODE: | 9 |
| NAME: | SMALL PARTITION | QTY: | 1Pc | CODE: | 10 |
| NAME: | SUPPORT STAND | QTY: | 1Pc | CODE: | 11 |
| NAME: | TOP DRAWER LEFT PANEL | QTY: | 3Pcs | CODE: | 102 |
| NAME: | TOP DRAWER RIGHT PANEL | QTY: | 3Pcs | CODE: | 105 |
| NAME: | BOTTOM DRAWER LEFT PANEL | QTY: | 4Pcs | CODE: | 110 |
| NAME: | BOTTOM DRAWER RIGHT PANEL | QTY: | 4Pcs | CODE: | 113 |
| NAME: | HARDWARE + AI | QTY: | 1Pack | | |
| NAME: | DRAWER SLIDE | QTY: | 1Pack | | |

# PARTS IN BOX 2

| | | | | | |
|---|---|---|---|---|---|
| NAME: | TOP PANEL | QTY: | 1Pc | CODE: | 1 |
| NAME: | BOTTOM FRAME | QTY: | 1Pc | CODE: | 4 |
| NAME: | CENTER RAIL | QTY: | 2Pcs | CODE: | 5 |
| NAME: | TOP DRAWER FRONT PANEL | QTY: | 2Pcs | CODE: | 101 |
| NAME: | TOP DRAWER BACK PANEL | QTY: | 2Pcs | CODE: | 103 |
| NAME: | TOP DRAWER BASE PANEL | QTY: | 2Pcs | CODE: | 104 |
| NAME: | CENTER DRAWER FRONT PANEL | QTY: | 1Pc | CODE: | 106 |
| NAME: | CENTER DRAWER BACK PANEL | QTY: | 1Pc | CODE: | 107 |
| NAME: | CENTER DRAWER BASE PANEL | QTY: | 1Pc | CODE: | 108 |
| NAME: | BOTTOM DRAWER FRONT PANEL | QTY: | 4Pcs | CODE: | 109 |
| NAME: | BOTTOM DRAWER BACK PANEL | QTY: | 4Pcs | CODE: | 111 |
| NAME: | BOTTOM DRAWER BASE PANEL | QTY: | 4Pcs | CODE: | 112 |

# INSTRUCTION FOR CAM-BOLT & CAM-LOCK

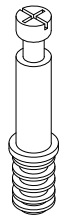

CAM-BOLT

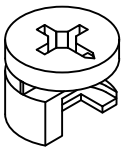

CAM-LOCK

Tool Required (Not Provided)

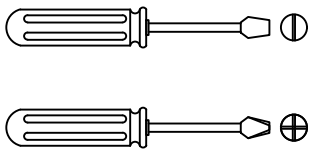

## INSERTING AND TIGHTENING CAM-BOLT

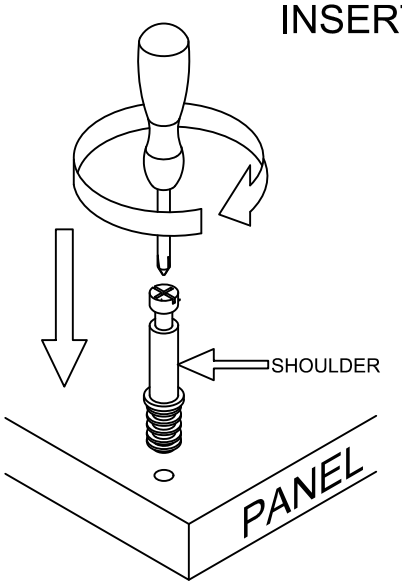


Place Cam-bolt on pre-drilled hole and screw in vertically

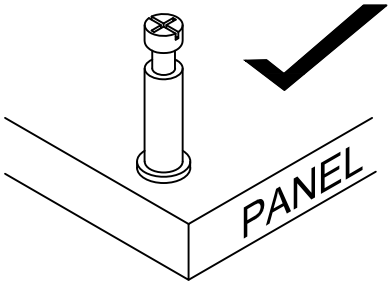


Shoulder is flushed (on the same level) with the panel

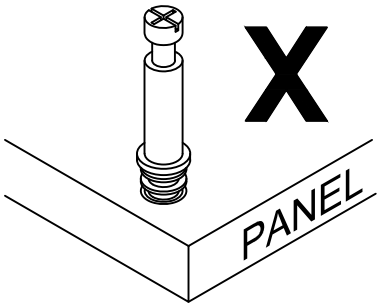


Shoulder is above the panel

Place Cam-bolt on the designated pre-drilled holes on the panel. Use a Phillips Screwdriver to screw-in Cam-bolt vertically until shoulder is flushed (on the same level) with panel.

## INSERTING CAM-LOCK

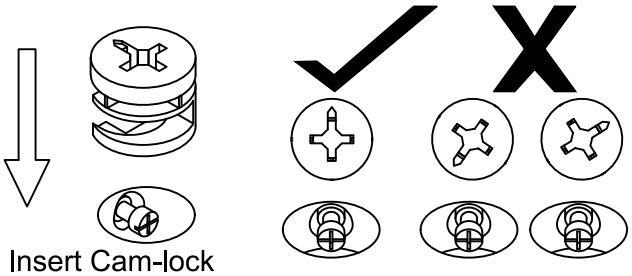


Insert Cam-lock with arrow align to Cam-bolt head

## TIGHTENING CAM-LOCK

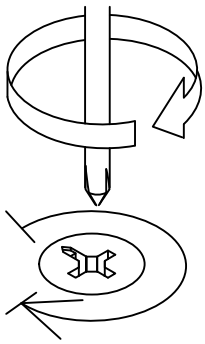

CAM-LOCK
Align the arrow on the Cam-lock to the Cam-bolt head and insert the Cam-lock .Ensure Cam-lock is fully inserted

Use a Screwdriver to turn Cam-lock clockwise so it locks onto the head of the Cam-bolt. Turn until it is snug (about 3/4ths of a turn) -- over -tightening could damage Cam-lock or/and Cam-bolt.

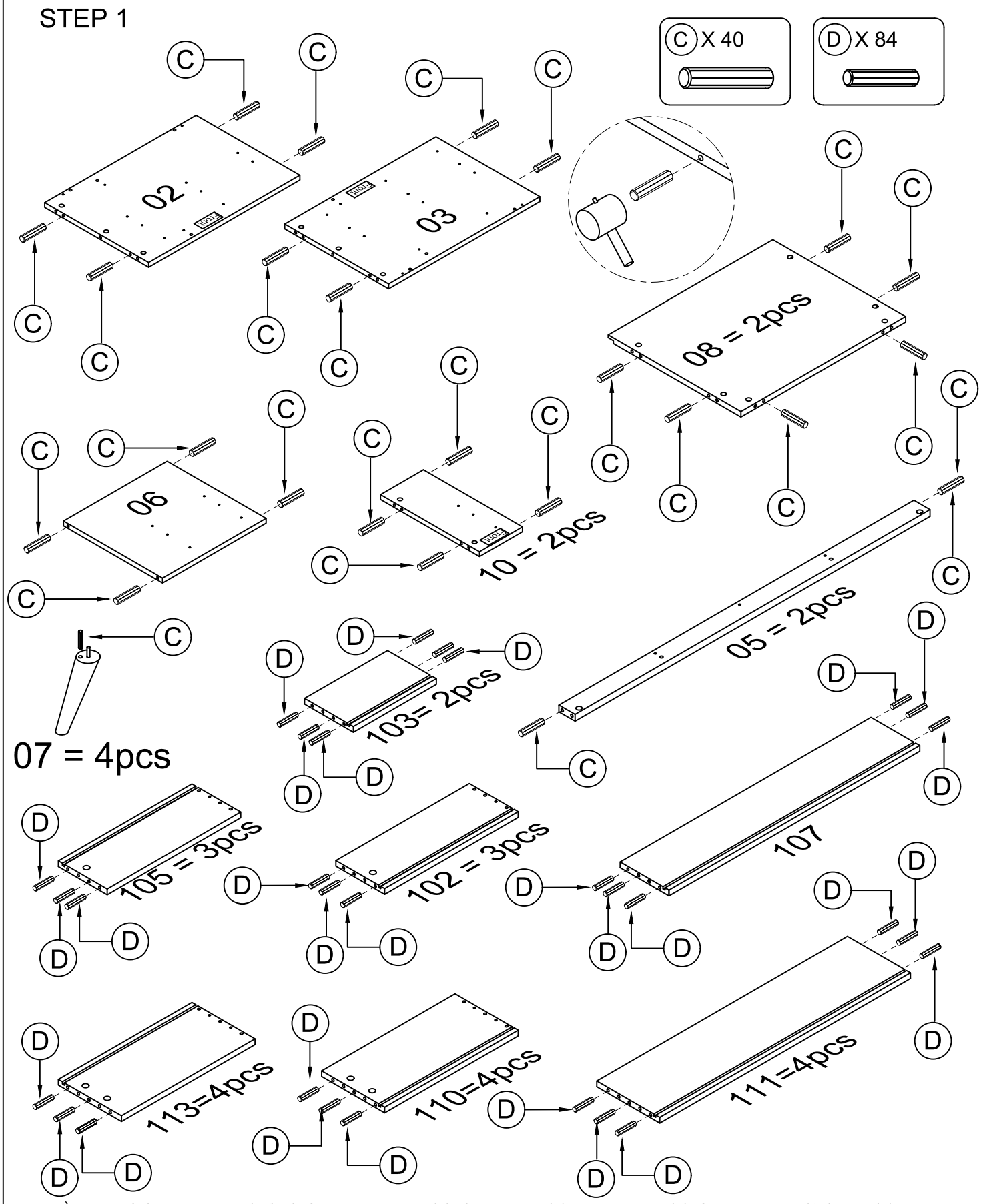


a) Lay Left & Right Panel (2 & 3), Side Back Panel (8), Center Rail (5), Big Partition (6), Small Partition(10), Leg (7), Top Drawer Back Panel (103), Top Drawer Left & Right Panel (102 & 105), Center Drawer Back Panel (107), Big Drawer Back Panel (111), Big Drawer Left & Right Panel (111 & 114) as shown on a material that does not scratch or damage the parts.

b) Identify the designated holes for Wood Dowel (C or D) on each part.

c) Insert Wood Dowel (C or D) into the designated holes of the respective parts. Use a mallet to lightly tap in Wood Dowel (C or D) if necessary.

## STEP 2

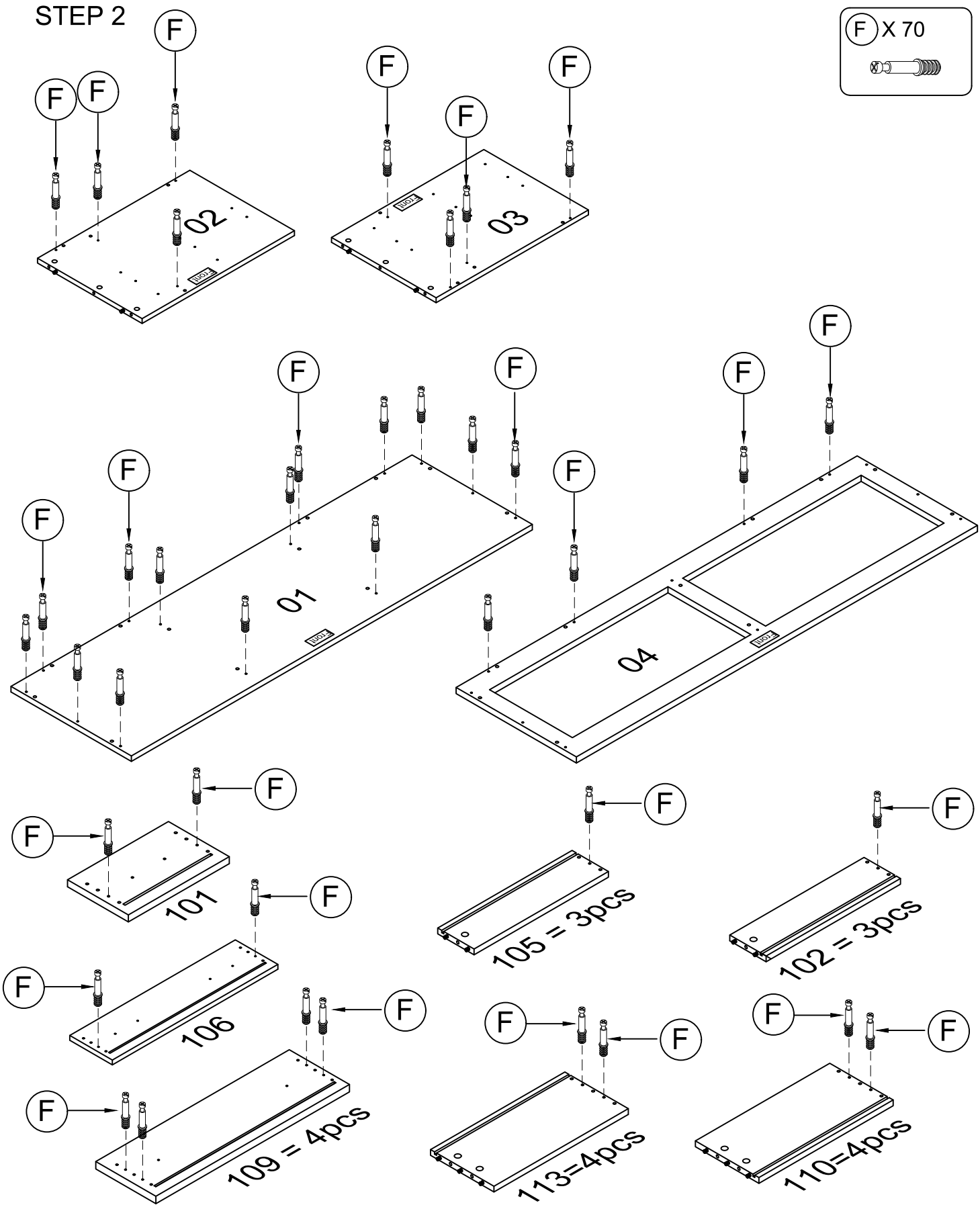


a) Lay the parts as shown on a material that does not scratch or damage the parts.

b) Screw in Cam-Bolt (F) into designated holes on Top Panel (1), Left & Right Panel (2 & 3), Bottom Frame (4), Top Drawer Front Panel (101), Center Drawer Front Panel(106), Bottom Drawer Front Panel (109), Top Drawer Left & Right Panel (102 & 105) and Bottom Drawer Left & Right Panel (110 & 113) .

Refer to page 5 for instructions on inserting and tightening Cam-Bolt (F).

# STEP 3

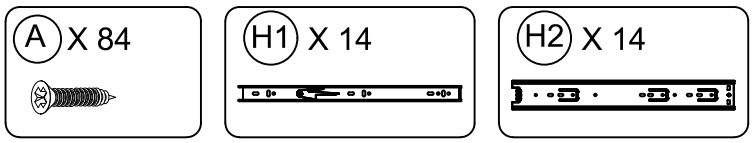


## STEP 3A

Identify the pilot holes on Top Drawer Left & Right Panel (102 & 105) and Bottom Drawer Left & Right Panel (110 & 113) and install Slide Runner (H1) using Chipboard Screw (A) - ensure that the screws are screwed in vertically. Do not tighten the screw completely until all three screws are in place. Note: The sequence of fastening Screw (A) is from the front to the back.

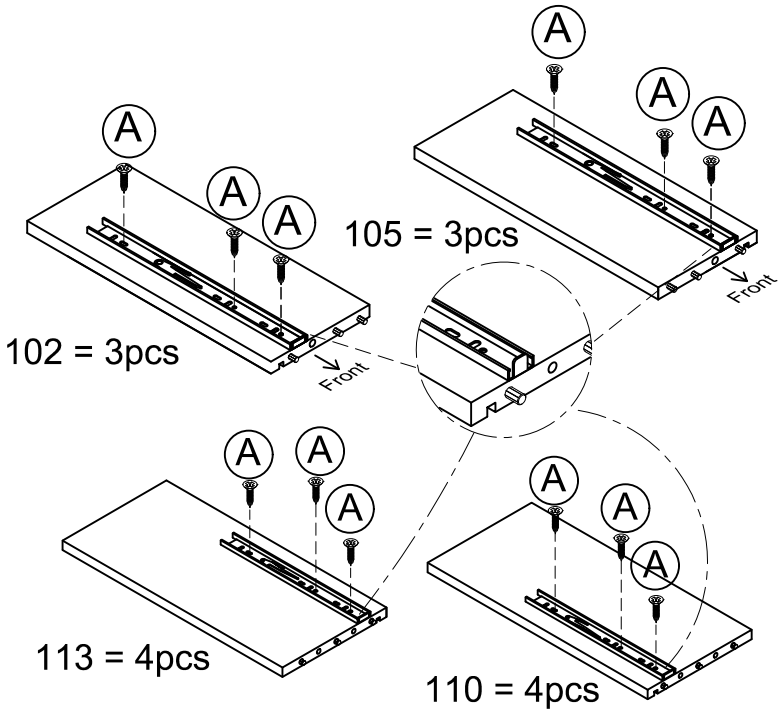


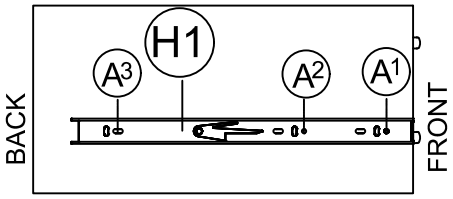


DRAWER SLIDE DISASSEMBLE STEPS:

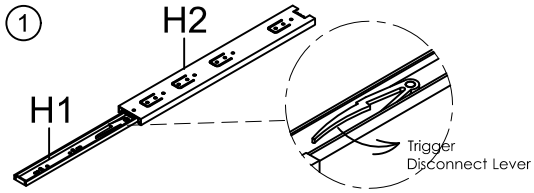


A) Distinguish between Slide Track (H2) and Slide Runner (H1) of Drawer Slide.
B) Slide out H1 from H2 until Trigger Disconnect Lever is visible.
C) Depress the Trigger Disconnect Lever in the groove of H1 and at the same time slide out H2 completely from H1.

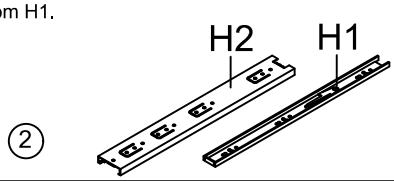


## STEP 3B

Identify the pilot holes on Left & Right Panel (2 & 3) for Slide Track (H2) Use Screw (A) to fasten (H2)- ensure that the screws are screwed in vertically. Do not tighten the screw completely until all three screws are in each track.

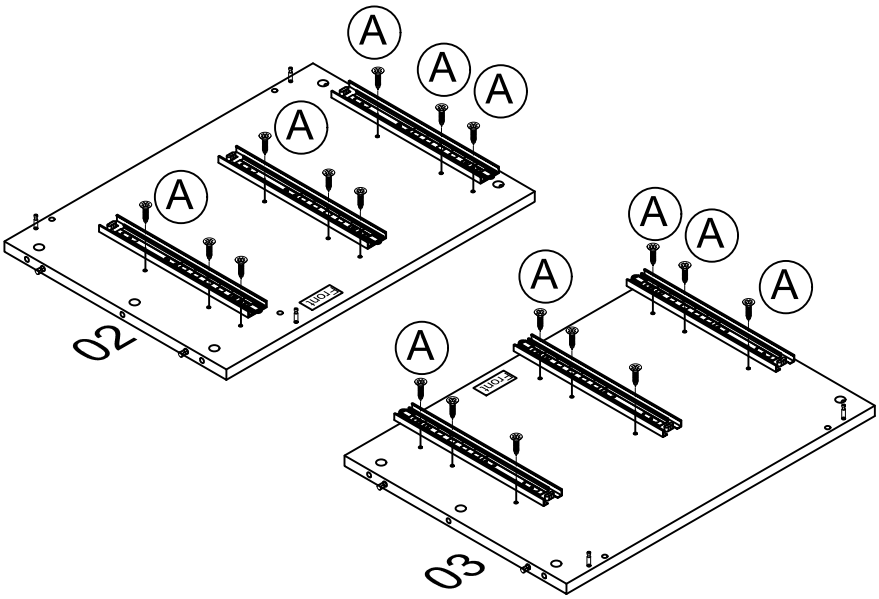


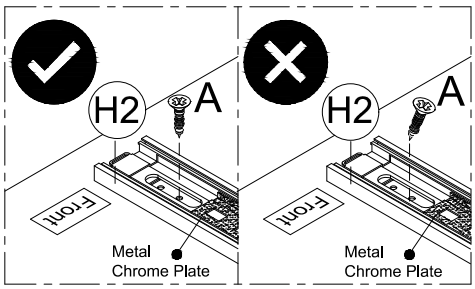


Step 1: Screw in $A^1$ and $A^3$ on a view hole.

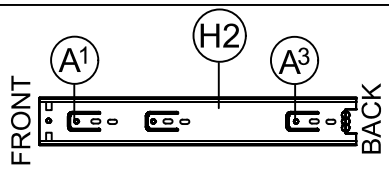


**Step 2:** Adjust Metal Chrome Plate, screw in $A^2$ on a view hole

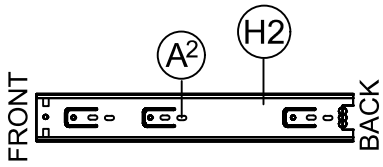

# STEP 3C

Identify the pilot holes on Big & Small Partition (6 & 10) for Slide Track (H2) Use Screw (A) to fasten (H2)- ensure that the screws are screwed in vertically. Do not tighten the screw completely until all three screws are in each track.

**Note the sequence of using Screw (A) to fasten (H)2**

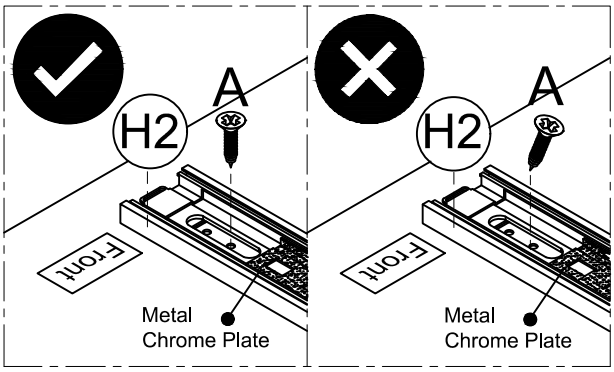


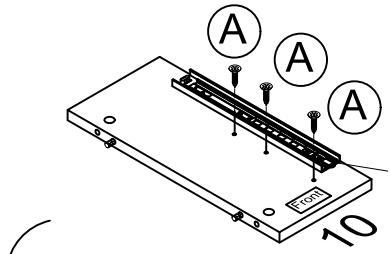


FLIP OVER

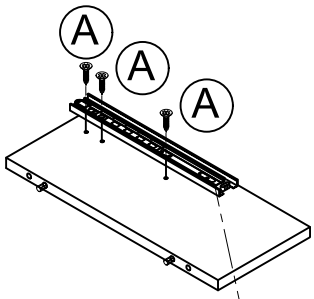


**Step :1** Screw in $A^1$ and $A^3$ on a view hole.

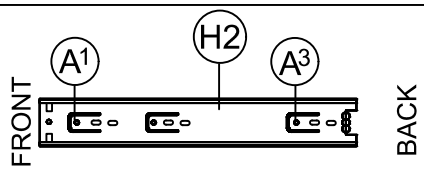


**Step :2** Adjust Metal Chrome Plate, screw in $A^2$ on view A hole

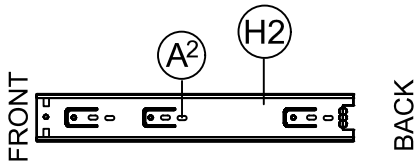


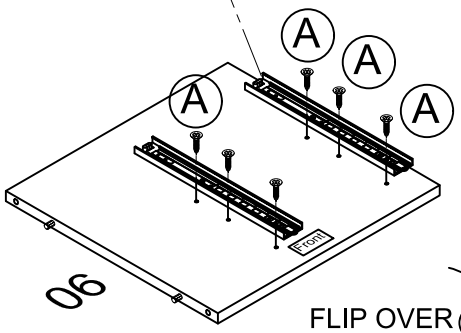


FLIP OVER

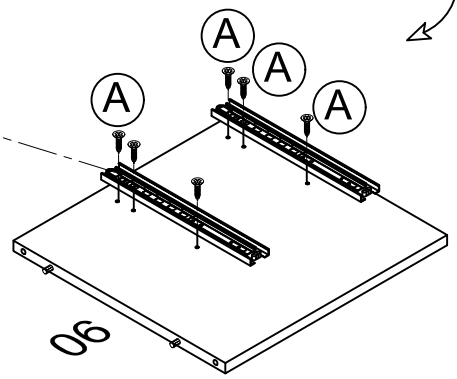


**Step :1** Screw in first & third screw ($A^1$ & $A^3$ ) through view hole.

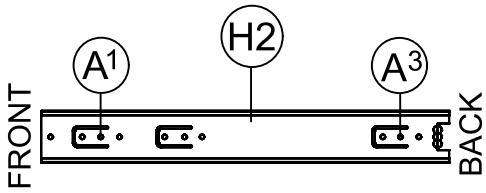


**Step :2** Adjust Metal Chrome Plate, screw in $A^2$ through view hole

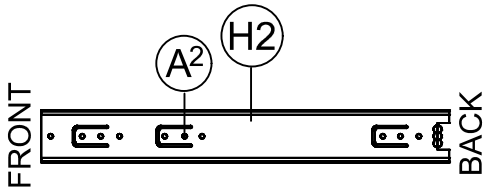

## STEP 4

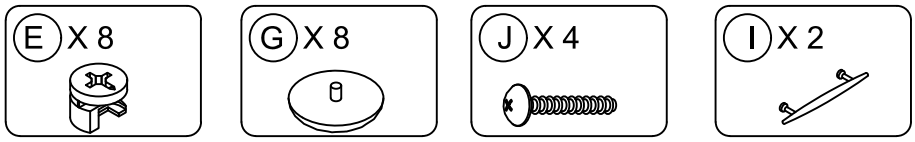


## STEP 4A

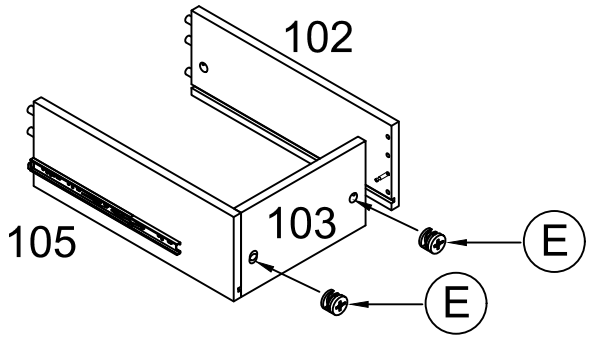


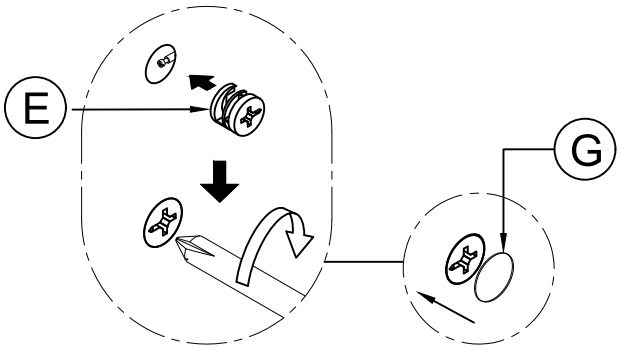


a) Attach Top Drawer Left & Right Panel (102 & 105) to Top Drawer Back Panel (103) via Cam-Bolt and Wood Dowel on the respective parts.

b) Insert Cam-Lock (E) into the designated hole on Top Drawer Back Panel (103) then turn clockwise to lock onto Cam-Bolt.

c) Insert Cam-Lock Cover (G) to conceal Cam-Lock (E).

## STEP 4B

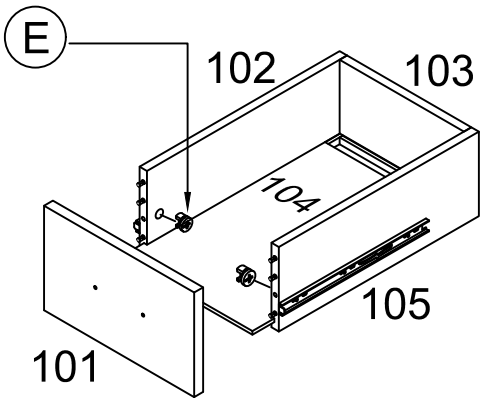


a) Fit Top Drawer Base Panel (104) via groove on Drawer Side and Back Panel.

b) Attach Top Drawer Front Panel (101) to Top Drawer Left & Right Panel (102 & 105) via Cam-Bolt and Wood Dowel on the respective parts. Check that Top Drawer Base Panel (104) fits into the groove on the inside face of Top Drawer Front Panels (101).

c) Insert Cam-lock (E) into designated holes on Top Drawer Left & Right Panel (102 & 105) and turn clockwise to lock onto Cam-bolt.

d) Insert Cam-lock Cover (G) to conceal cam-lock (E).

## STEP 4C

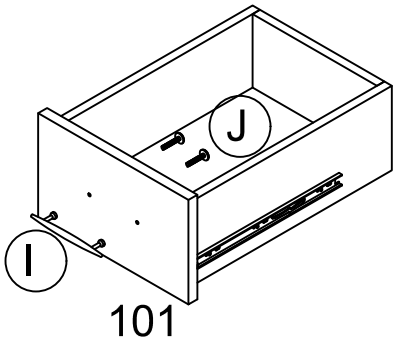


a) Affix Handle (I) to Top Drawer Front Panel (101) with Panhead Screw (J).

## STEP 5

## STEP 5A

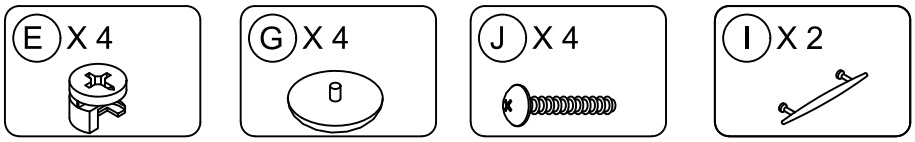


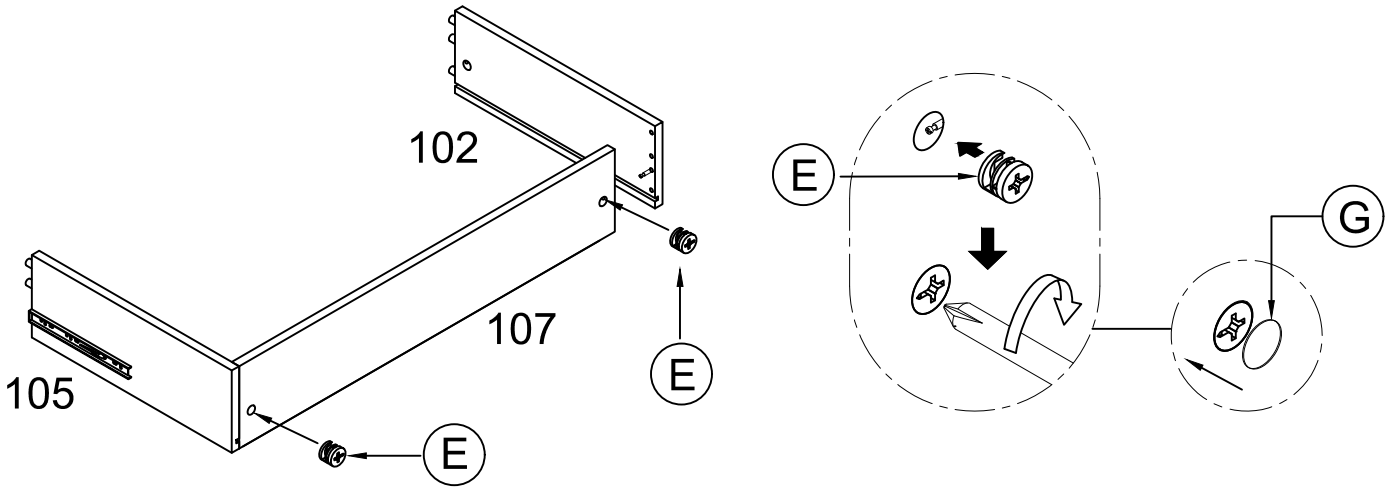


a) Attach Top Drawer Left & Right Panel (102 & 105) to Center Drawer Back Panel (107) via Cam-Bolt and Wood Dowel on the respective parts.

b) Insert Cam-Lock (E) into the designated hole on Center Drawer Back Panel (107) then turn clockwise to lock onto Cam-Bolt.

c) Insert Cam-Lock Cover (G) to conceal Cam-Lock (E).

## STEP 5B

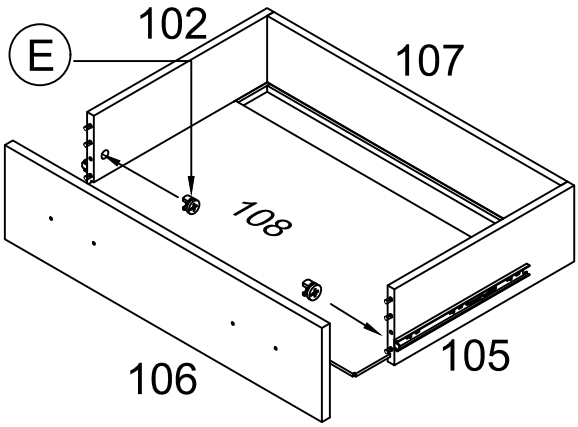


a) Fit Center Drawer Base Panel (108) via groove on Drawer Side and Back Panel.

b) Attach Center Drawer Front Panel (106) to Top Drawer Left & Right Panel (102 & 105) via Cam-Bolt and Wood Dowel on the respective parts. Check that Center Drawer Base Panel (108) fits into the groove on the inside face of Center Drawer Front Panel (106).

c) Insert Cam-lock (E) into designated holes on Top Drawer Left & Right Panel (102 & 105) and tum clockwise to lock onto Cam-bolt.

d) Insert Cam-lock Cover (G) to conceal cam-lock (E).

## STEP 5C

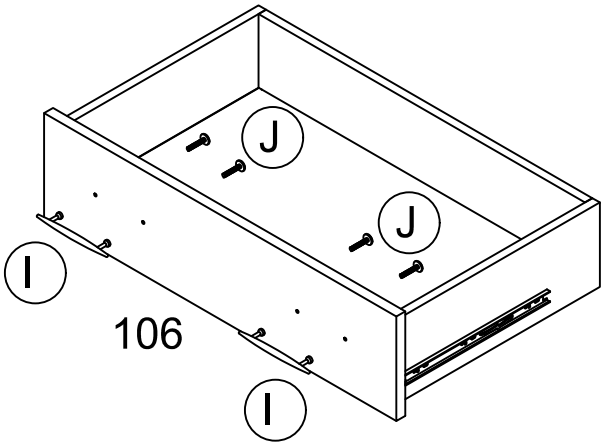


a) Affix Handle (I) to Center Drawer Front Panel (106) with Panhead Screw (J).

## STEP 6

## STEP 6A

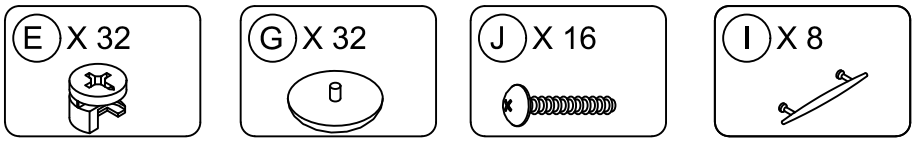


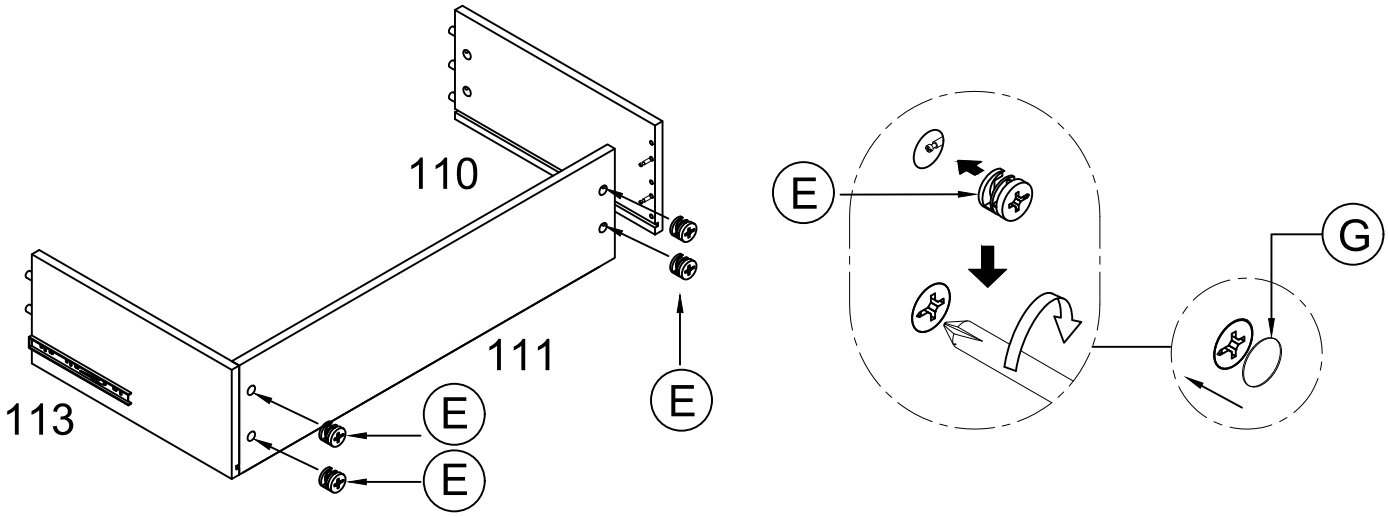


a) Attach Bottom Drawer Left & Right Panel (110 & 113) to Bottom Drawer Back Panel (111) via Cam-Bolt and Wood Dowel on the respective parts.

b) Insert Cam-Lock (E) into the designated hole on Bottom Drawer Back Panel (111) then turn clockwise to lock onto Cam-Bolt.

c) Insert Cam-Lock Cover (G) to conceal Cam-Lock (E).

## STEP 6B

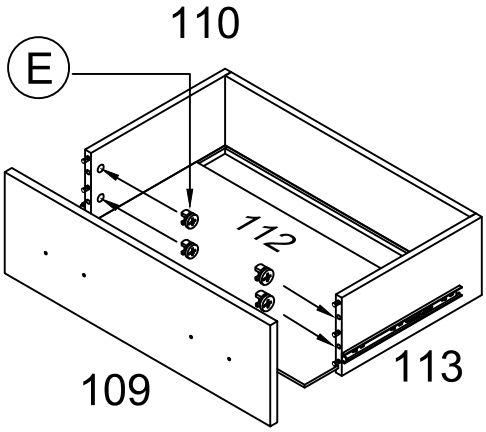


a) Fit Bottom Drawer Base Panel (112) via groove on Drawer Side and Back Panel.

b) Attach Bottom Drawer Front Panel (109) to Bottom Drawer Left & Right Panel (110 & 113) via Cam-Bolt and Wood Dowel on the respective parts. Check that Bottom Drawer Base Panel (112) fits into the groove on the inside face of Bottom Drawer Front Panels (109).

c) Insert Cam-lock (E) into designated holes on Bottom Drawer Left & Right Panel (110 & 113) and turn clockwise to lock onto Cam-bolt.

d) Insert Cam-lock Cover (G) to conceal cam-lock (E).

## STEP 6C

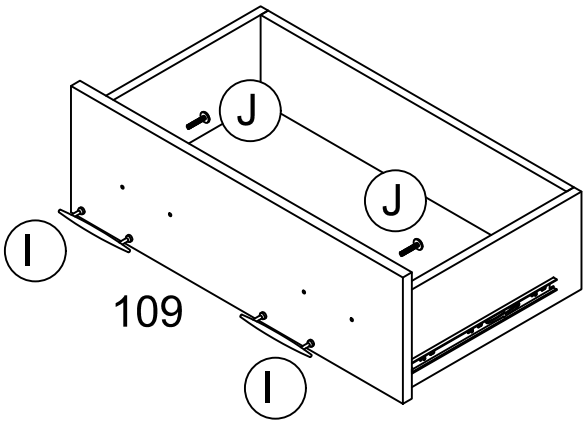


a) Affix Handle (I) to Bottom Drawer Front Panel (109) with Panhead Screw (J).

## STEP 7

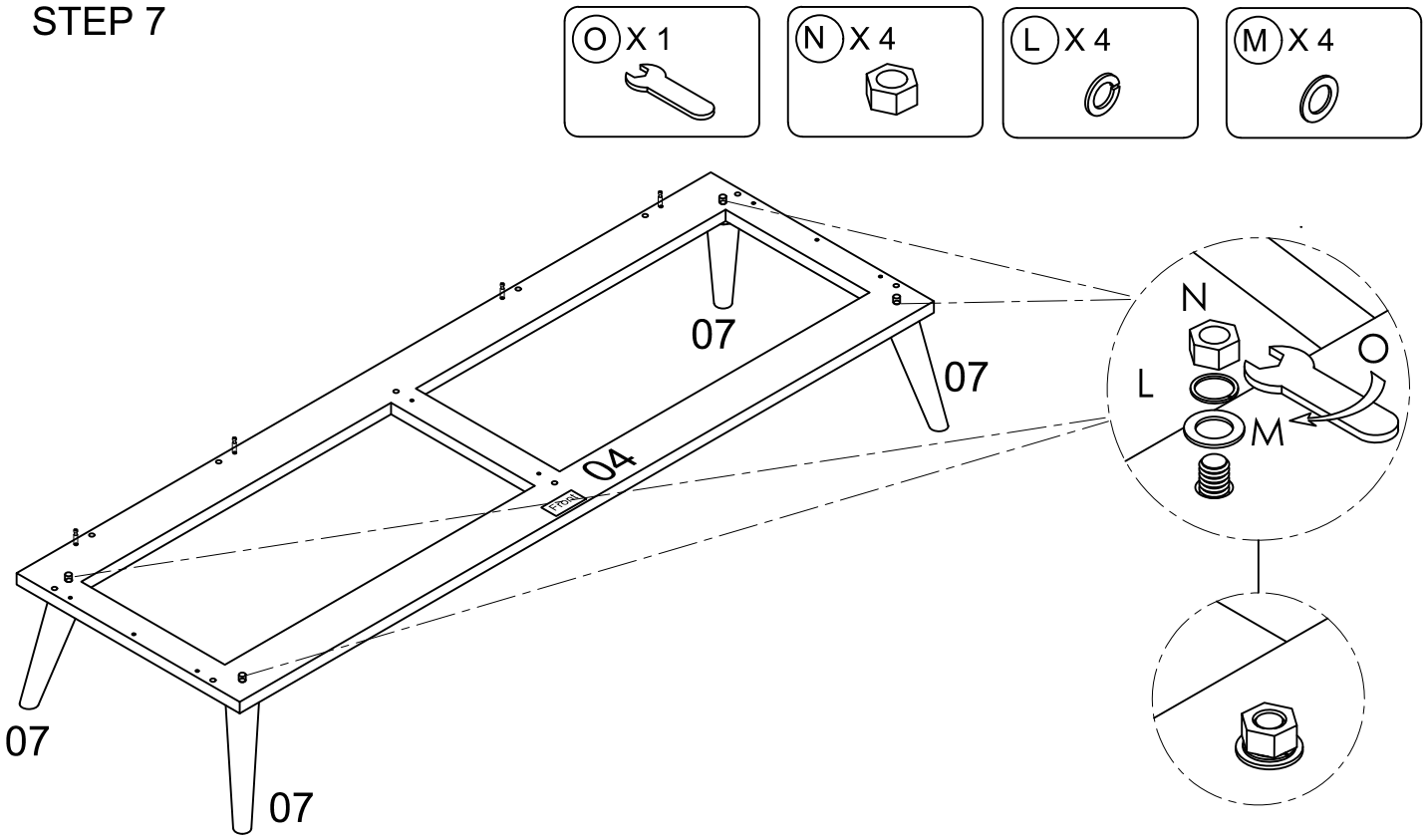


A. Attach Leg (7) to Bottom Frame (4) and fasten with Flat Washer (M), Spring Washer (L) and Hex Nut (N).
Use Wrench (O) to tighten Hex Nut (N).

## STEP 8

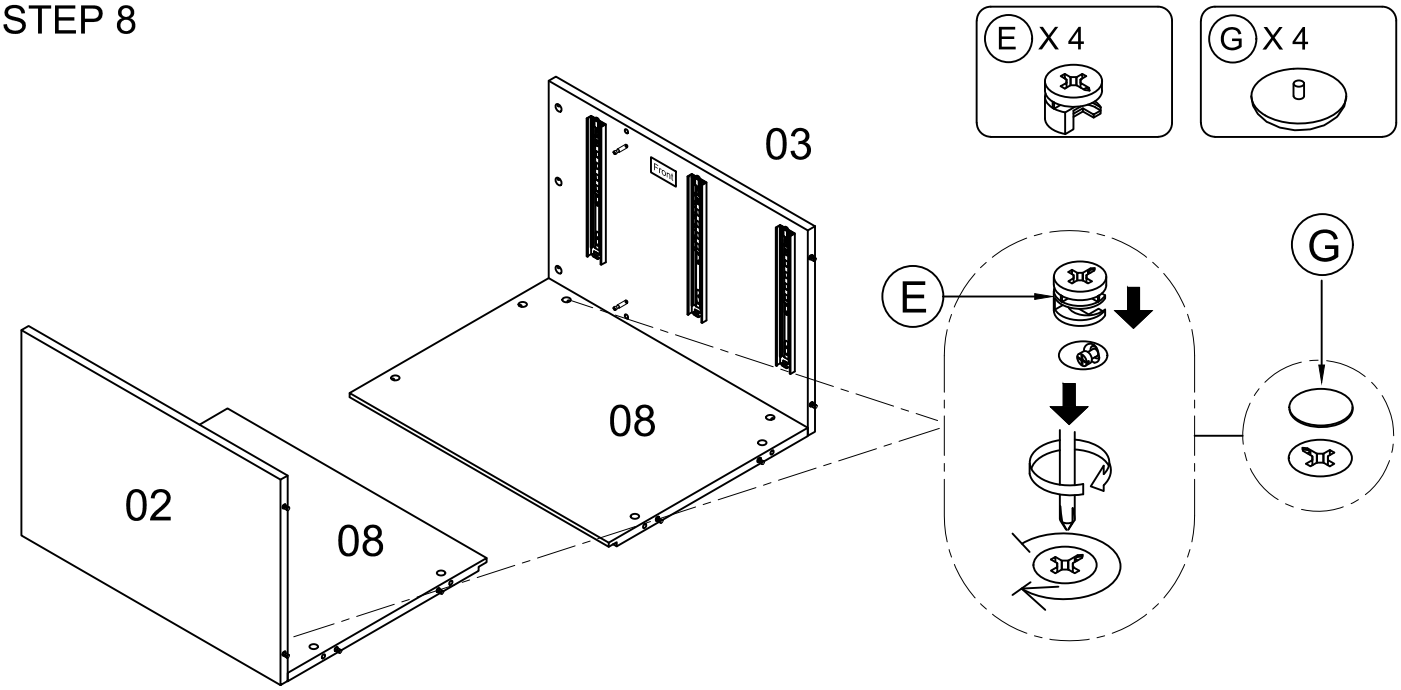


A. Attach Left & Right Panel (2 & 3) to Side Back Panel (8), via Cam-Bolt (F) and Wood Dowel (C) on respective parts.

B. Insert Cam-lock (E) into designated hole on Side Back Panel (8), then turn clockwise to lock onto Cam-Bolt (F).

C. Insert Cam-Lock Cover (G) to cover Cam-Lock (E).

## STEP 9

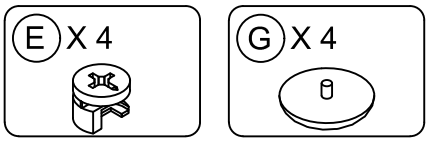


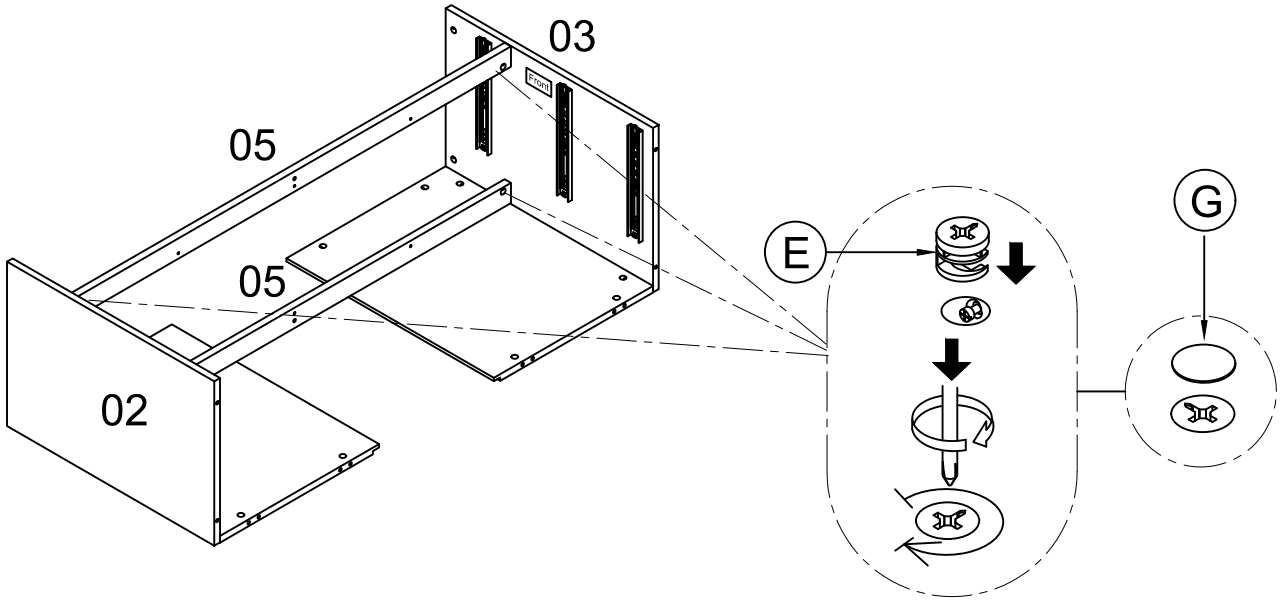


A. Attach Center Rail (5) to Left & Right Panel (2 & 3), via Cam-Bolt (F) and Wood Dowel (C) on respective parts.

B. Insert Cam-lock (E) into designated hole on Center Rail (5), then turn clockwise to lock onto Cam-Bolt (F).

C. Insert Cam-Lock Cover (G) to cover Cam-Lock (E).

## STEP 10

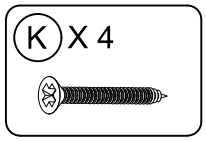


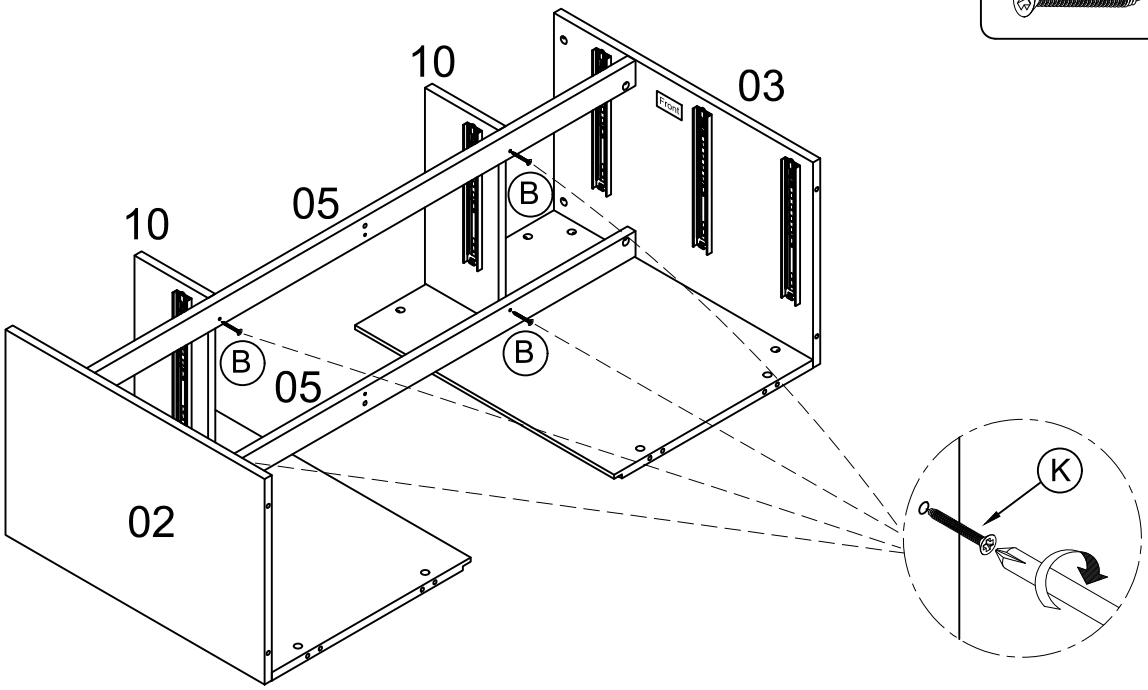


Use Chipboard Screw (K) to fasten Center Rail (5) to Small Partition (10). Do not tighten Screw (K) completely until all the screws are in place.

## STEP 11

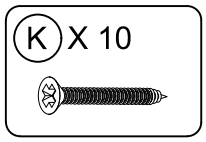


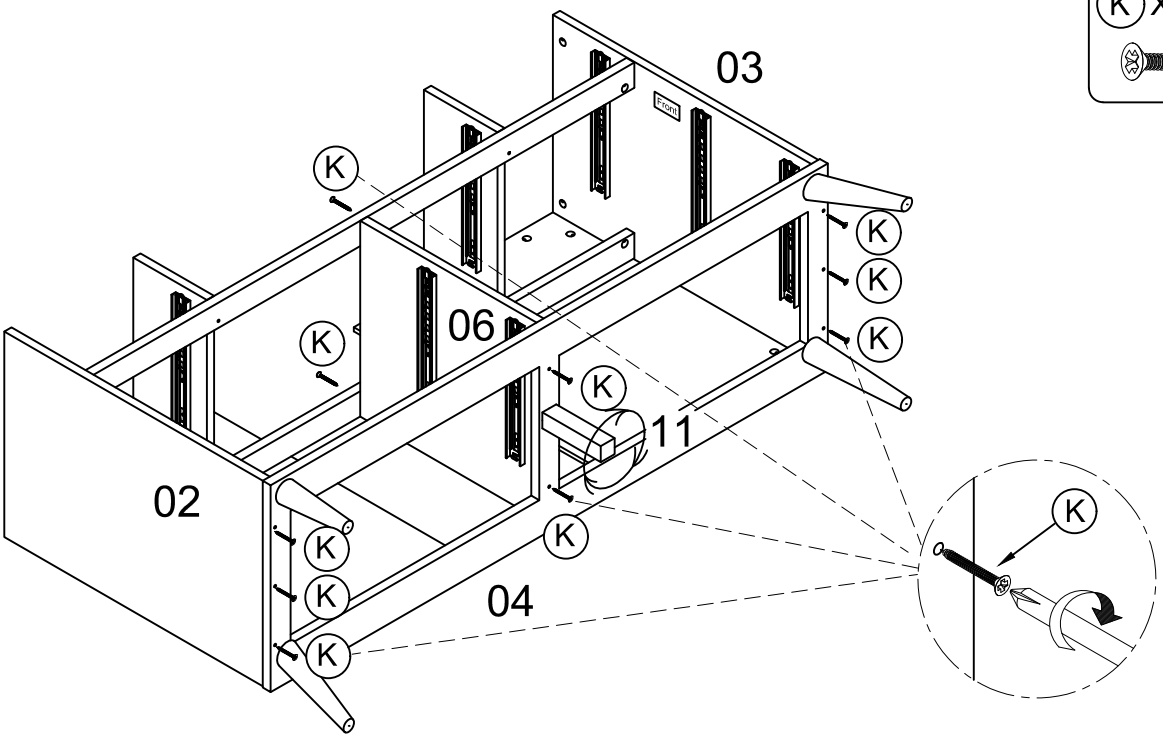


A. Use Chipboard Screw (K) to fasten Big Partition (6) and Bottom Frame (4) to Left & Right Panel (2 & 3). Do not tighten Screw (B) completely until all the screws are in place.

B. Screw-in Support Stand (11) to Bottom Frame (4) and tighten completely.

## STEP 12

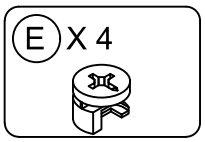


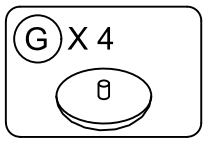


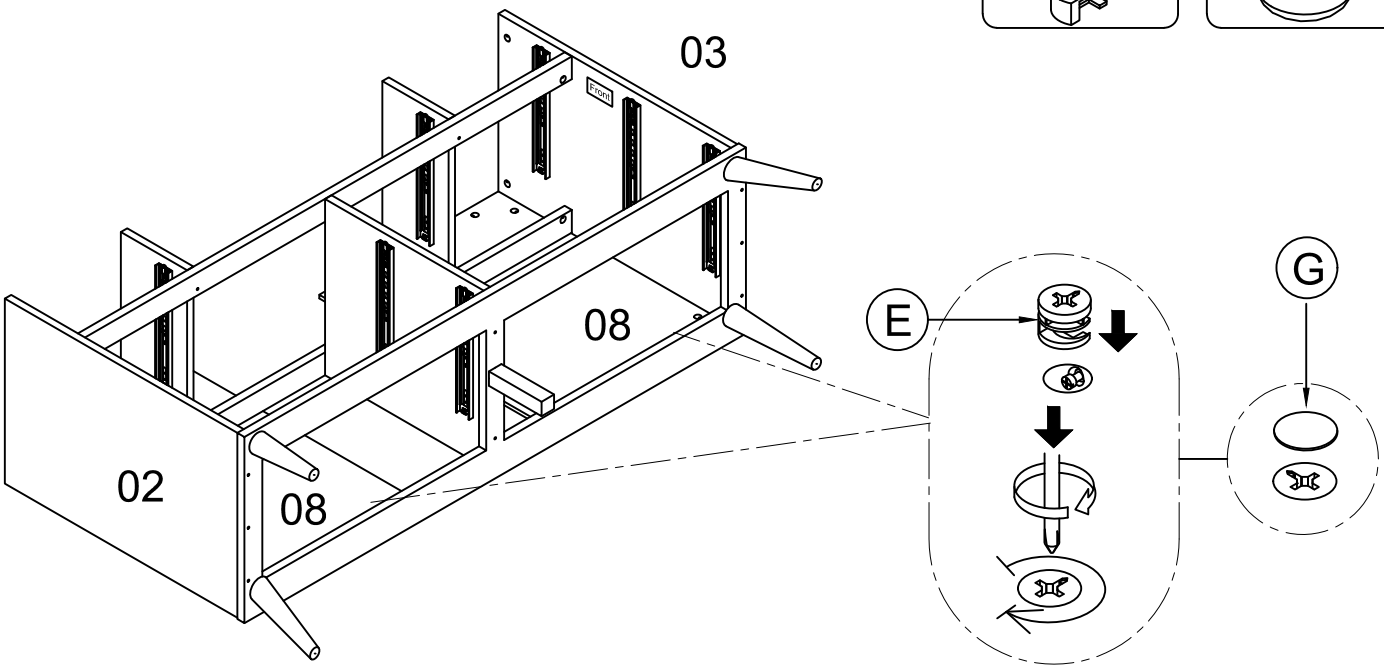


A. Insert Cam-lock (E) into designated hole on Side Back Panel (8), then turn clockwise to lock onto Cam-Bolt (F).

B. Insert Cam-Lock Cover (G) to cover Cam-Lock (E).

## STEP 13

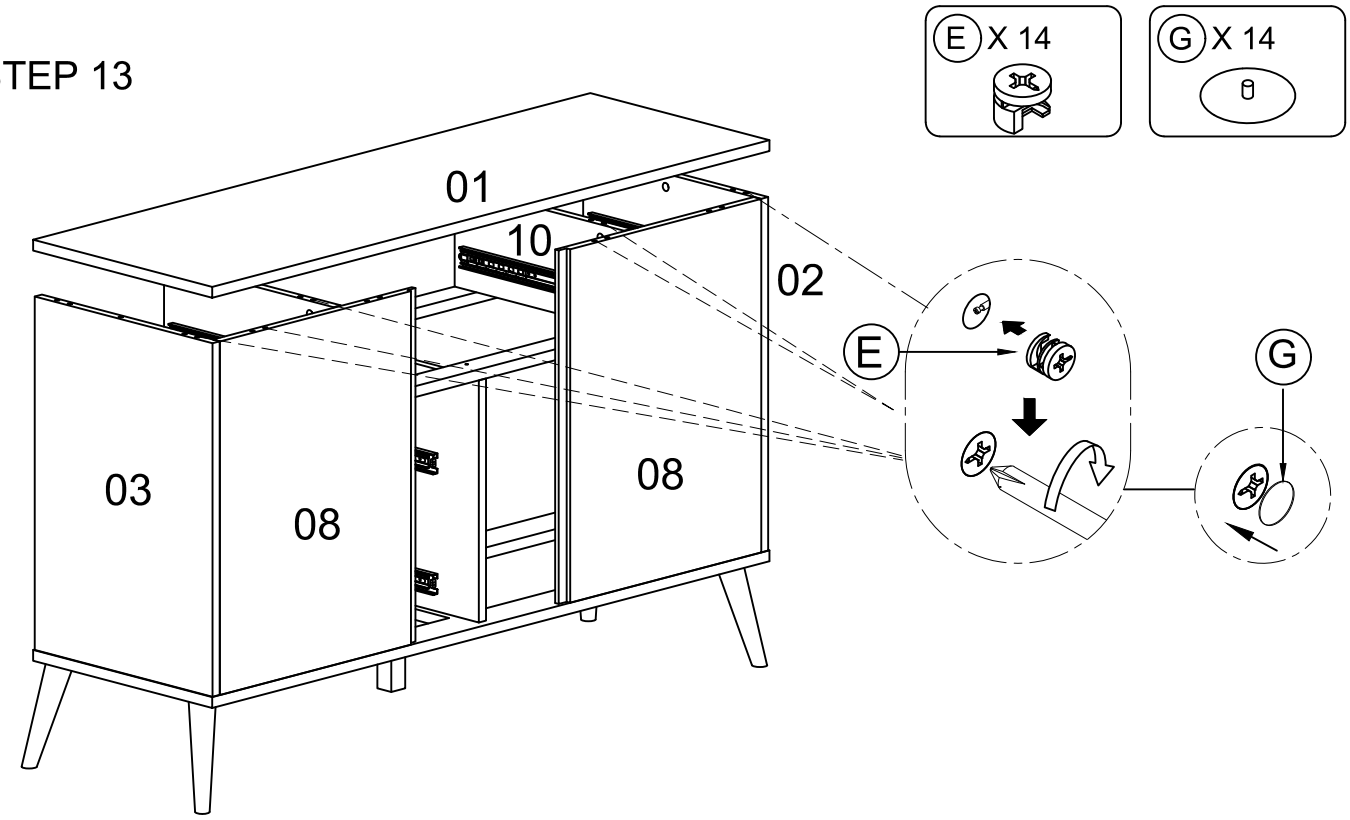


a) Attach Top Panel (1) to Left & Right Panel (2 & 3), Small Partition (10) and Side Back Panel (8), via Cam-Bolt and Wood Dowel on respective parts.

b) Insert Cam-lock (E) into designated hole on Left & Right Panel (2 & 3), Small Partition (10) and Side Back Panel (8), then turn clockwise to lock onto Cam-Bolt.

c) Insert Cam-Lock Cover (G) to cover Cam-Lock (E).

## STEP 14

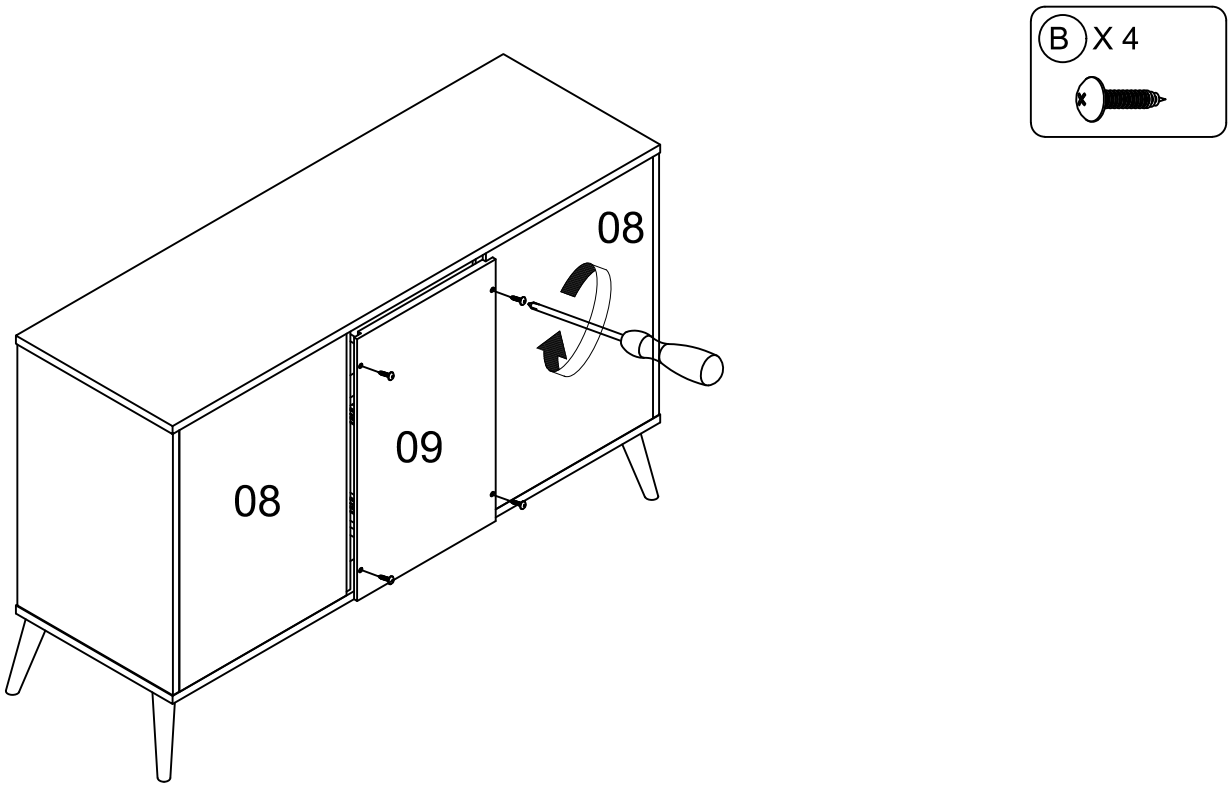


a) Attach Center Back Panel (9) squarely to Side Back Panel (8) fasten with Panhead Chipboard Screw (B).

# STEP 15

## STEP 15A

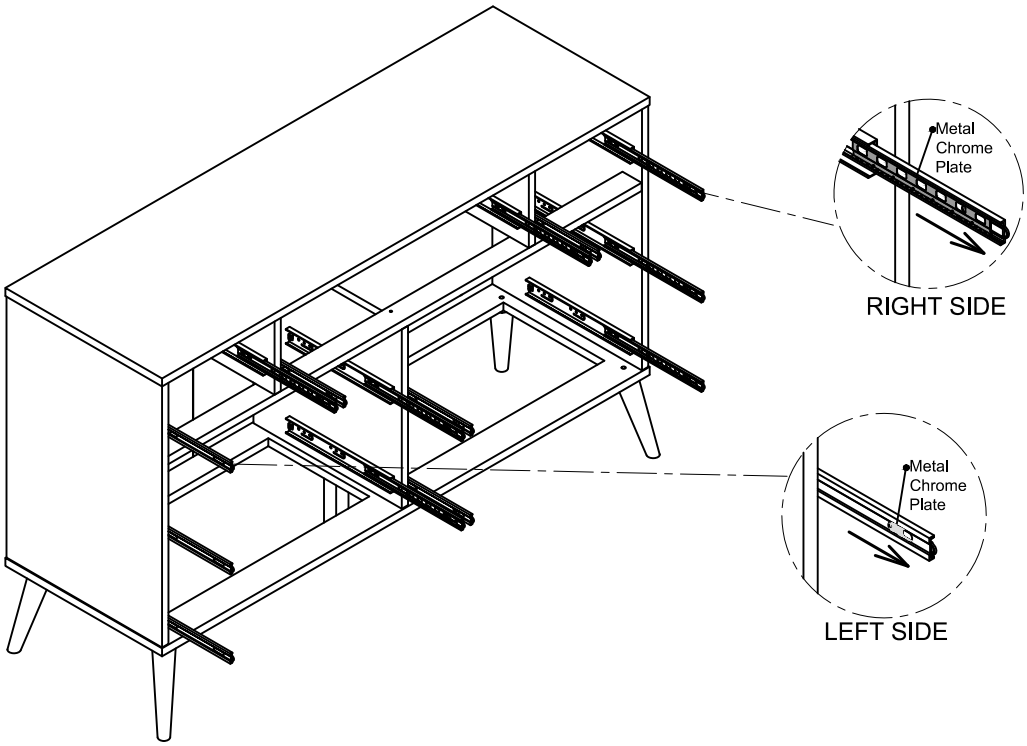


a. Slide out Metal Chrome Plate (ball bearing slider) on both sides of Slide Track (H2).

## STEP 15B

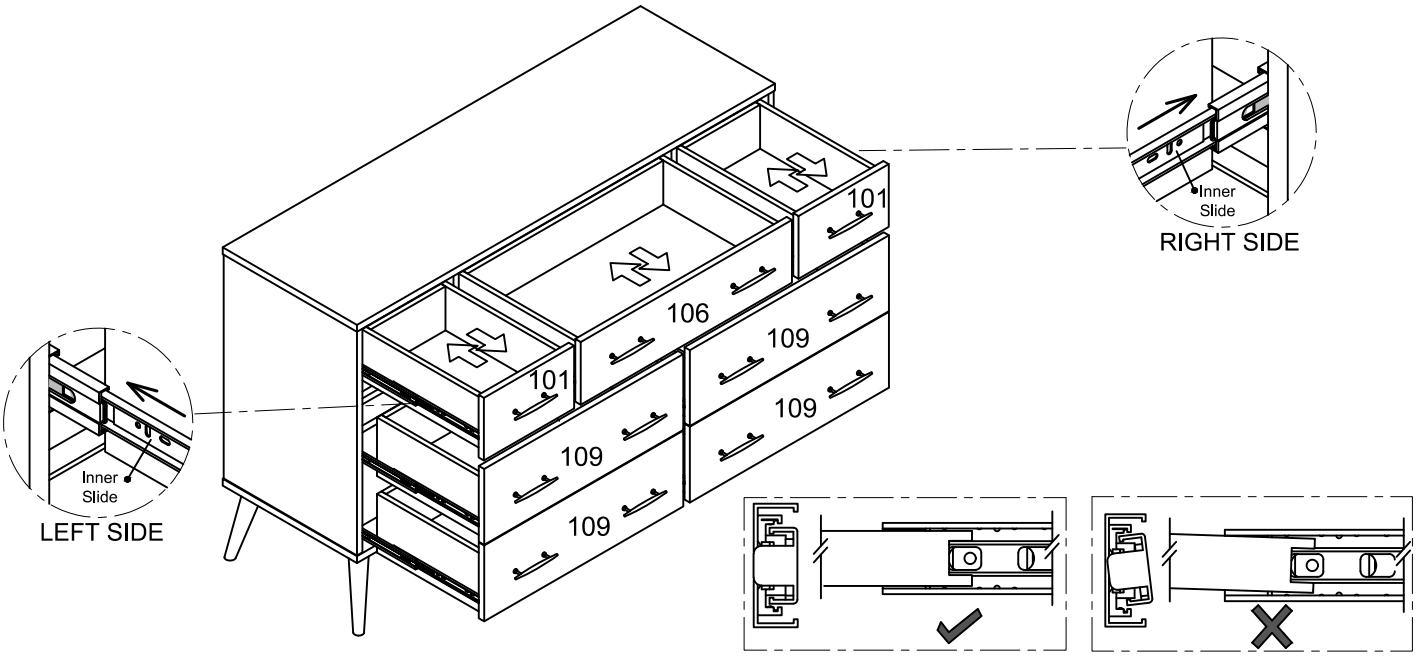


Align the back open-end of the Slide Runner (H1) on each side of the drawer to fit squarely into the groove on the open front-end of the chrome plate on Slide Track (H2) on the Side Panels.

Be sure the drawer/(H1) is not tilted or angled and push in the drawer slightly and squarely.

Push in the drawer further in gently - when the Trigger Disconnect Lever on (H1) is engaged onto (H2) there will be a slight resistance - this is normal. Pull out the drawer a little bit and gently push in the drawer again to engage the Trigger Disconnect Lever to the slide mechanism on (H2). The drawer should now slide smoothly.

If the drawer cannot be pushed in or stuck, do not force it in. Remove the drawer and repeat the steps above.

# STEP 15C

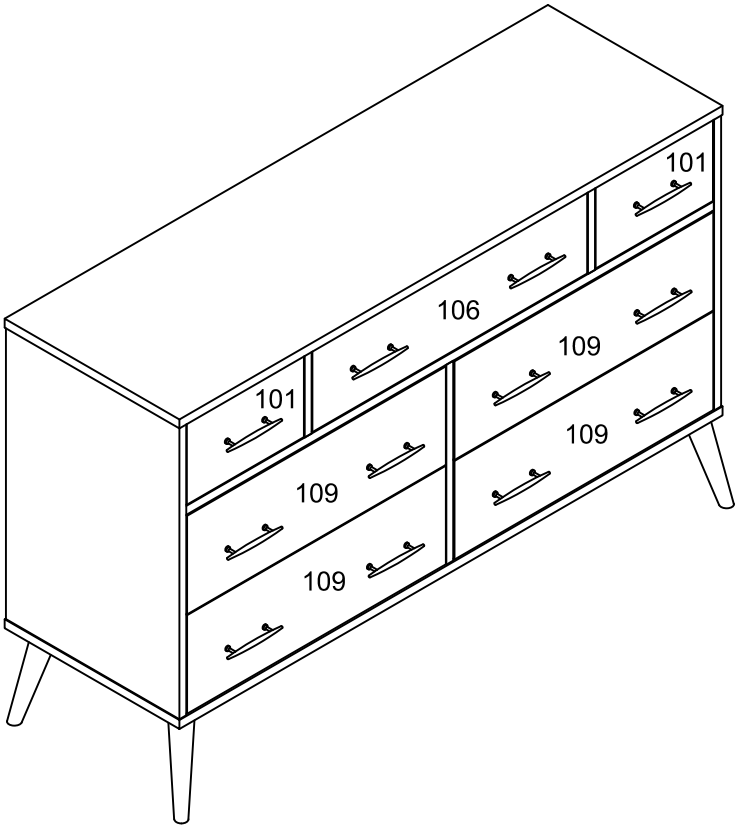


Drawers should be assembled as follows

The assembly of the Dresser is complete.

STEP 16

# ANTI–TIP KIT AND INSTALLATION

WARNING

Serious or fatal injuries can occur when furniture is not secured and tipover. To prevent tipover :

1) Install anti-tip kit provided.
2) Place heavier items in lower drawers or shelves.
3) Unless specifically designed to accommodate, do not place TVs or heavy objects on top of this product.
4) Never allow children to climb or hang on this product or any part of the product including, drawers, shelves or doors.
5) Never open more than one drawer at a time.
6) Do not deactivate or remove any drawer interlock system.

Use of tip-over restraints only reduces and does not eliminate the risk of tipover.

Parts and Hardware List

| PIECE | DESCRIPTION | PICTURE | QUANTITY |
|---|---|---|---|
| A | Bracket | | 2Pcs |
| B | SCREW M4 X 50mm | | 1Pc |
| C | SCREW M4 X 16mm | | 1Pc |
| D | Nylon Strap | | 1Pc |

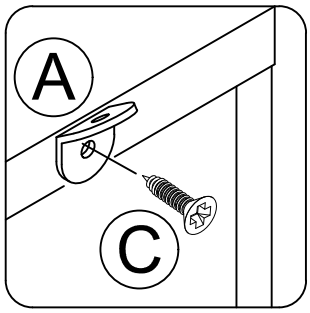


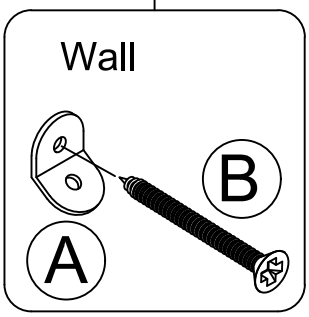


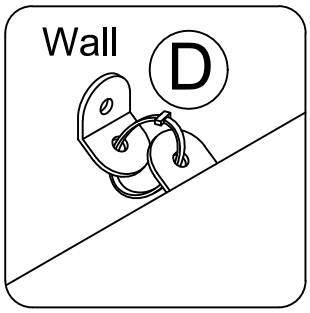


NOTE:
WALL PLUG IS NOT SUPPLIED WITH THIS PRODUCT AS DIFFERENT WALL MATERIALS REQUIRE DIFFERENT TYPES OF FIXING HARDWARE & YOU MUST USE SUITABLE FIXING HARDWARE FOR TYPE OF WALL YOU INTEND TO MOUNT THIS PRODUCT TO WALL.

Installation Steps:

1. Use Screw (C) to fasten Bracket (A) to the center of back top edge of the Top Panel.
2. Mark the location on the wall for mounting the second set of bracket (A) which need to be at the same level as Bracket (A) on the back edge of Top Panel and drill hole in the wall as per the length and diameter of WALL PLUG.
3. Insert WALL PLUG into the drilled hole and fasten (A) to the wall with Screw (B).
4. Place the furniture so the brackets on the back edge of Top panel is aligned with the bracket on the wall.
5. Lace the end of the Nylon Strap (D) through each of the bracket. Bring both ends together and slide the beaded end of the strap through the keyhole-shaped slot on the other end. Pull down on the beaded end until it snap-locked into the keyhole-shaped slot.
6. Check to make sure the strap is securely laced and locked to the brackets.

The anti-tipping installation is complete.