ASSEMBLY INSTRUCTION

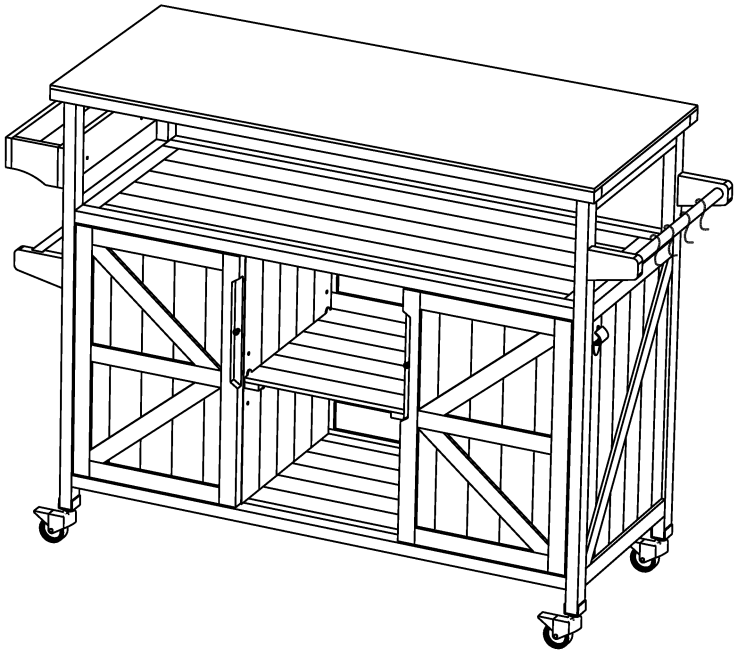

IMPORTANT NOTE:

① PLACE ALL PARTS ON A CLEAN AND SMOOTH SURFACE SUCH AS A RUG OR CARPET TO AVOID THE PARTS FROM BEING SCRATCHED.

② BEFORE YOU BEGIN,KINDLY FOLLOW THE ASSEBLY INSTRUCTIONS STEP BY STEP.

③ DO NOT TIGHTEN ALL SCREWS AND BOLTS UNTIL THIS ITEM IS FULLY SET-UP.

Detail View

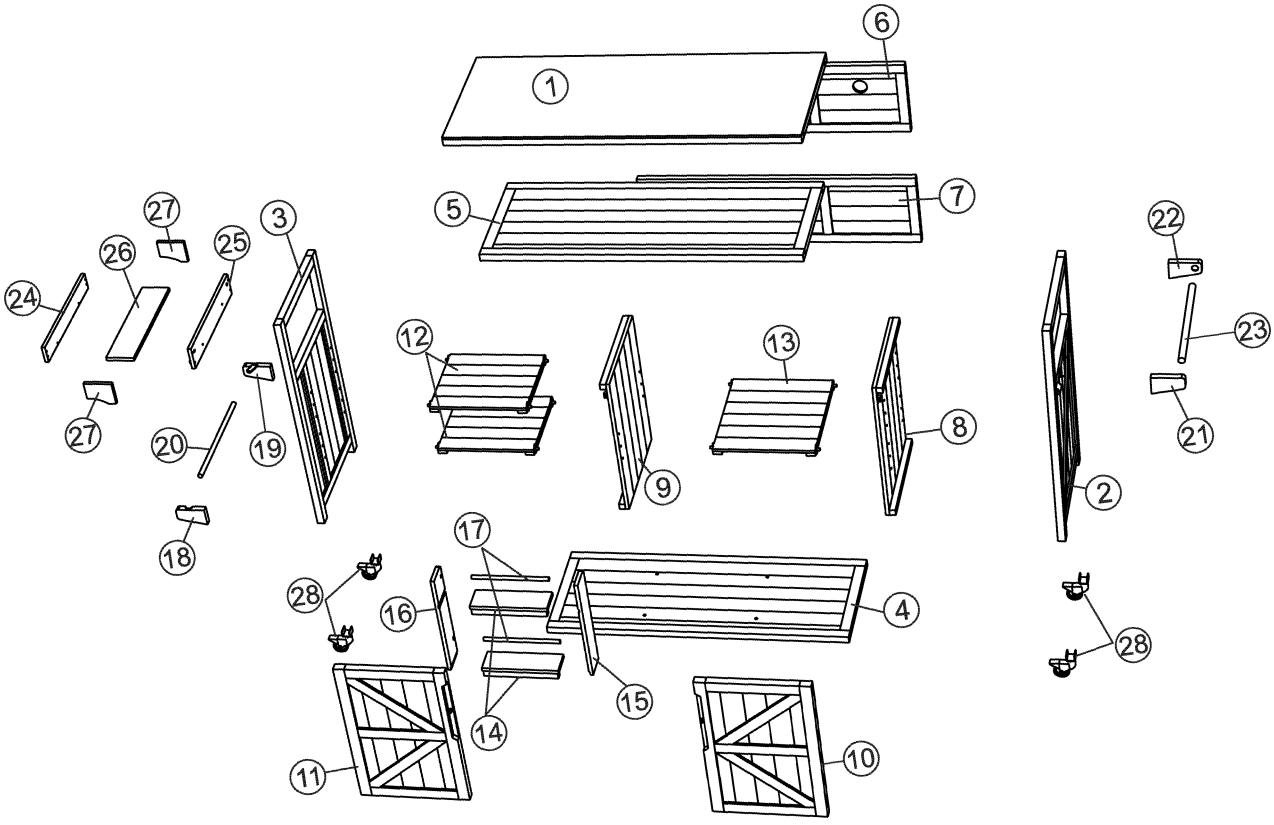
1
2
3
4
5
6
7
8
9
10
11
12
13
14
15
16
17
18
19
20
21
22
23
24
25
26
27
27
28
28

WF532198

1 	2 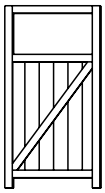	3 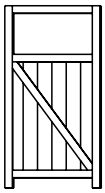	4 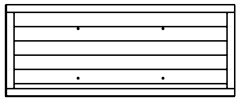
Table-1pc	Right panel-1pc	Left panel-1pc	Bottom panel-1pc
5 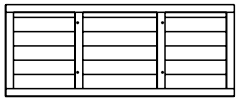	6 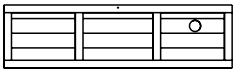	7 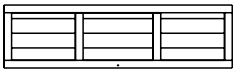	8 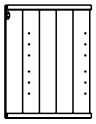
Top panel-1pc	Upper back panel-1pc	Lower back panel-1pc	Right middle panel-1pc
9 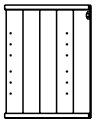	10 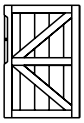	11 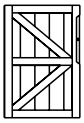	12 
Left middle panel-1pc	Right door-1pc	Left door-1pc	Layer for side pat-2pcs
13 	14 	15 	16 
Layer for middle part-1pc	Lay of storage rack-2pcs	Left panel of storage rack-1pc	Right panel of storage rack-1pc
17	18 	19 	20
Wooden stick of storage rack-2pcs	Rear part of left push rod-1pc	Front part of left push rod-1pc	Left push rod-1pc
21 	22 	23	24 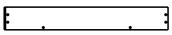
Front part of right push rod-1pc	Rear part of right push rod-1pc	Right push rod-1pc	Front panel of outer storage rack-1pc
25 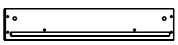	26 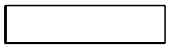	27 	28 
Back panel of outer storage rack-1pc	Bottom panel of outer storage rack-1pc	Side panel of outer storage rack-2pcs	Wheels with brake-4pcs

Hardware List

A ⌀6.0*30 Ph zinc bolt-2pcs	B ⌀3.0*28 Ph zinc screws-20pcs	C ⌀3.0*18 Ph zinc screws-12pcs	D ⌀3.5*40 Ph zinc screws-16pcs
E ⌀3.5*50 Ph zinc screws-26pcs	F ⌀4.0*35 Ph zinc bolt-4pcs	G ⌀6.0*15 Ph zinc bolt-2pcs	H ⌀3.5*60 Ph zinc screws-4pcs

I L shape metal support-12+4pcs	J Hooks-4pcs	K Wood dowels-36pcs	L Bottle opener-1pc	M Wrench-1pc

ASSEMBLY TOOLS REQUIRED(NOT INCLUDED)

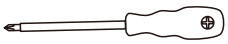

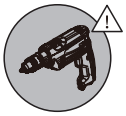

PLEASE BE CAREFUL DO NOT DAMAGE THE HOLE POSITION WHEN YOU USE POWERTOOLS !

Step 1

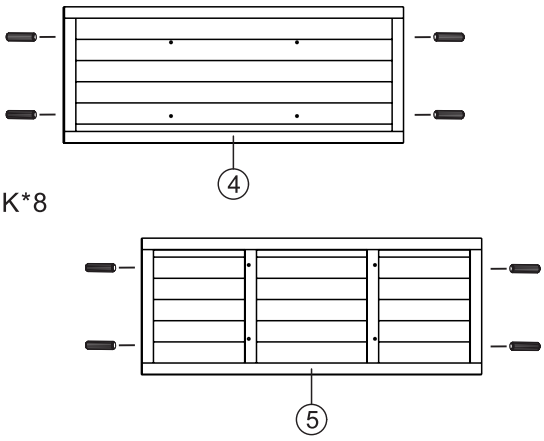



K*8

Step 2

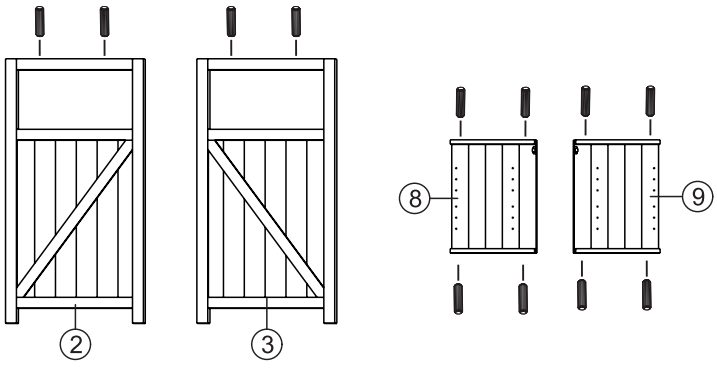



K*12

Step 3

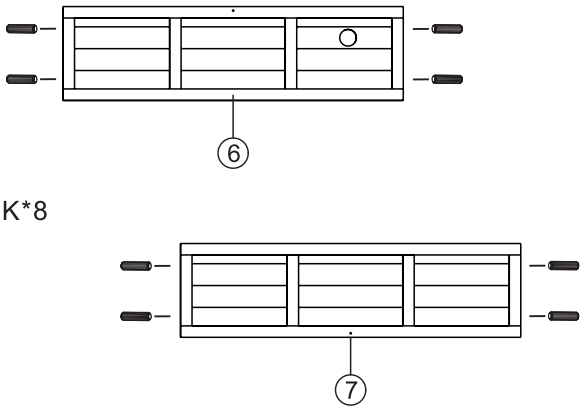



K*8

Step 4

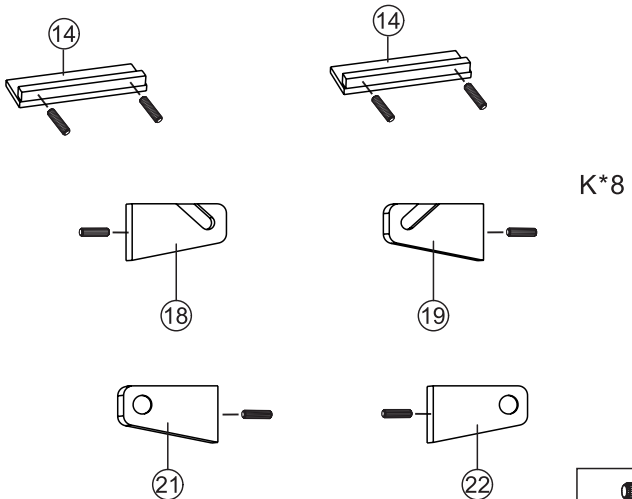

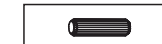

K*8

Attention: the direction of magnetic need to face forward
And there is gap on front part.

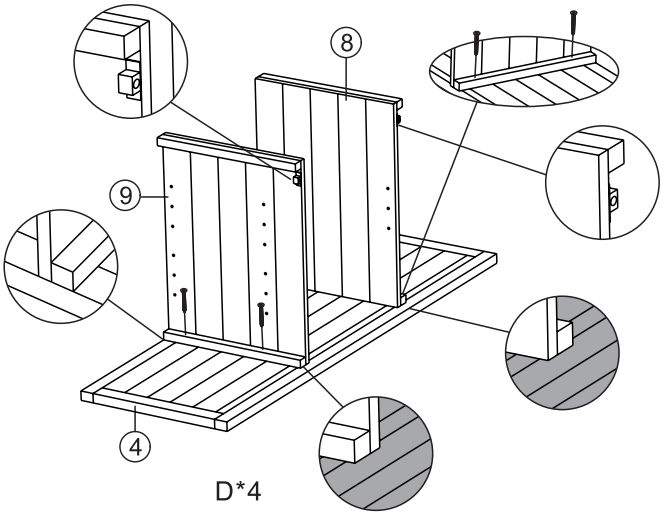

Step 5

D*4

Repeat same way for fixing Part 5
Attention: the direction of magnetic need to face forward
And there is gap on front part .

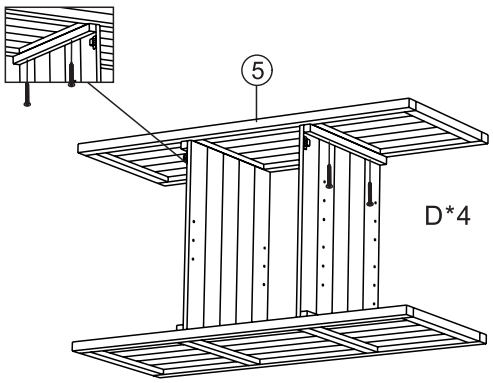

Step 6

D*4

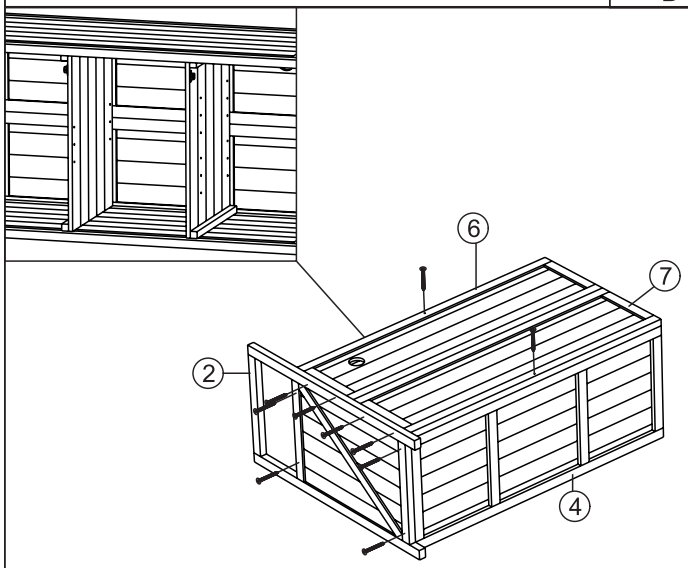

E*10

Step 7

E*10

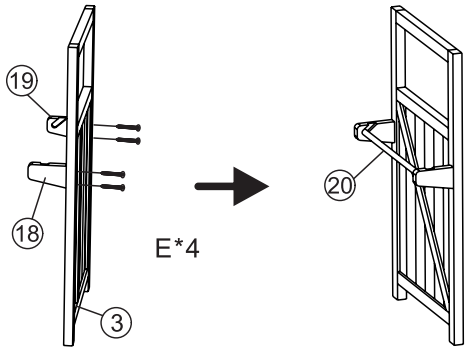

Step 8

E*4

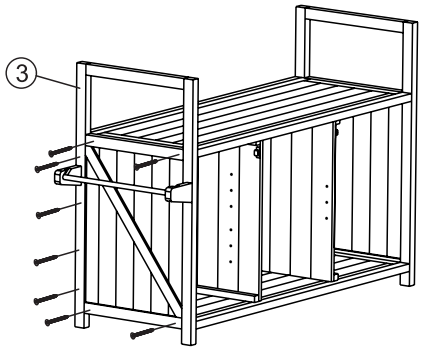

E*8

Step 9

E*8

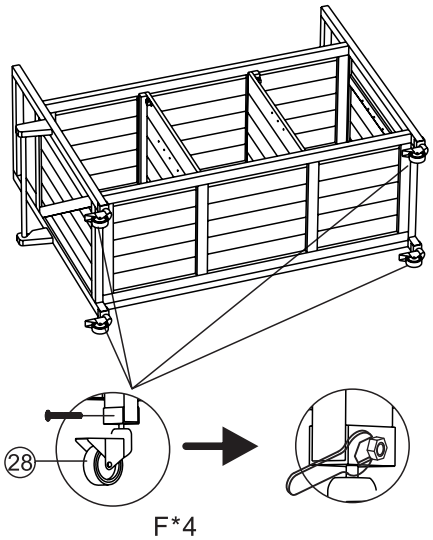

Step 10

F*4	M*1

Place Part I on left side or right side as per your request.
So that place Part 12 on it.

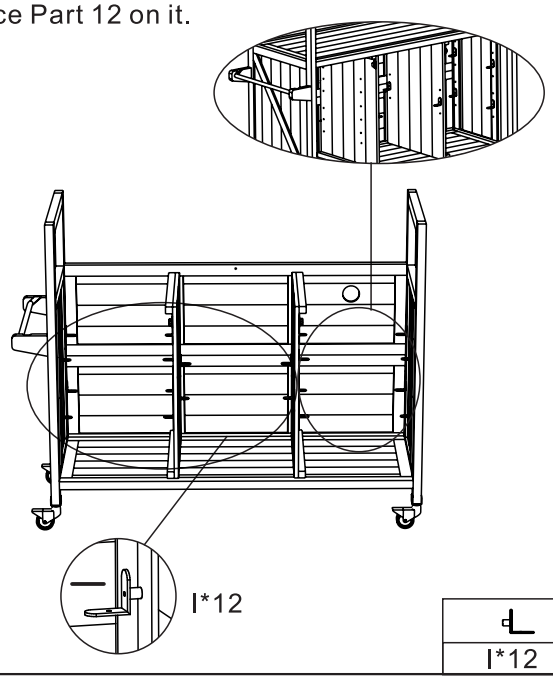

Step 11

I*12

Place 2 x Part 12 on left or right
as per your own request.

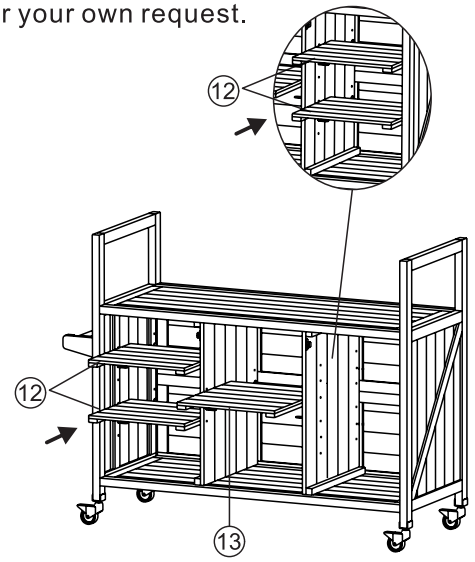

Step 12

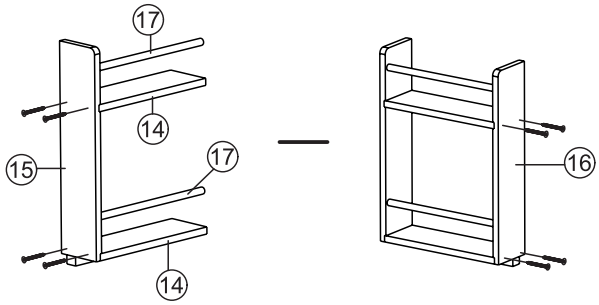

B*8

Step 13

B*8

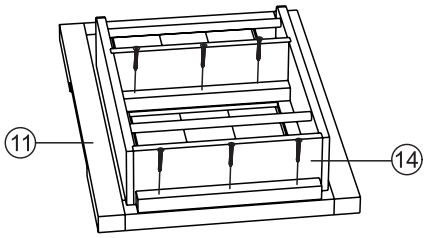

D*6

Step 14

D*6

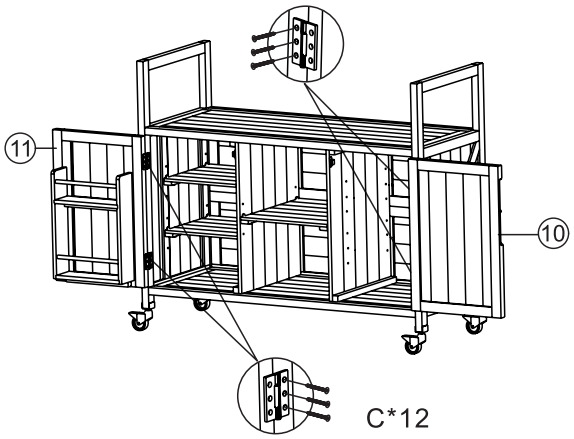

C*12

Step 15

C*12

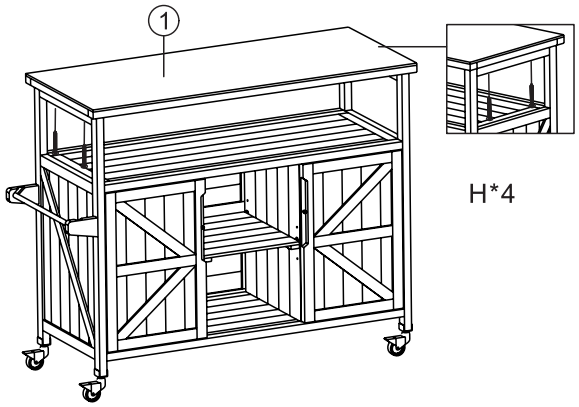

H*4

Step 16

H*4

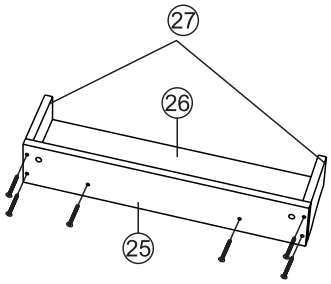

B*6

Step 17

B*6

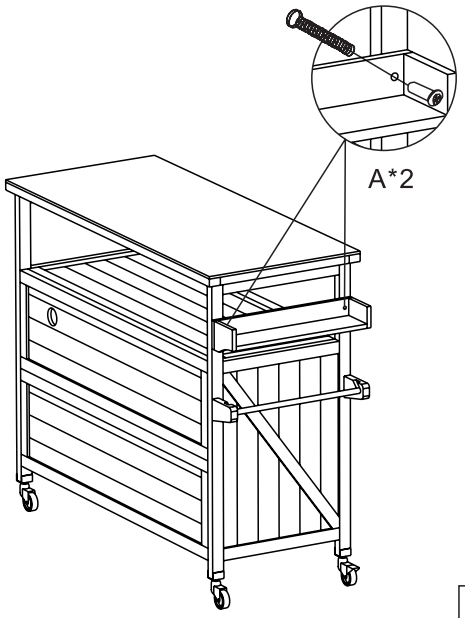

Step 18



A*2

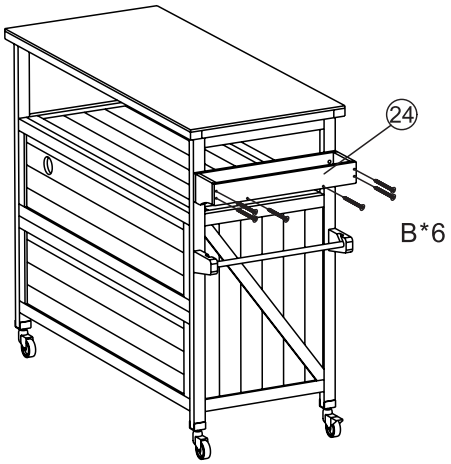

Step 19



B*6

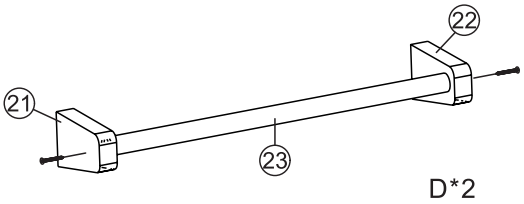

D*2

Step 20

D*2

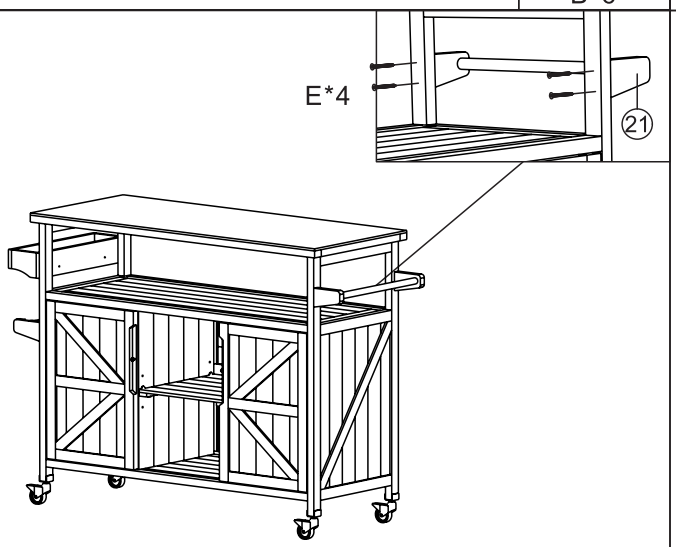

Step 21



E*4

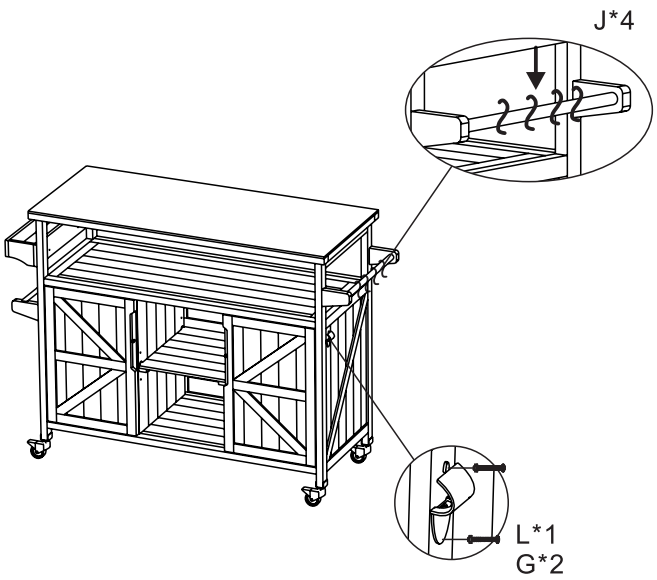

Step 22



G*2



J*4



L*1