View Product

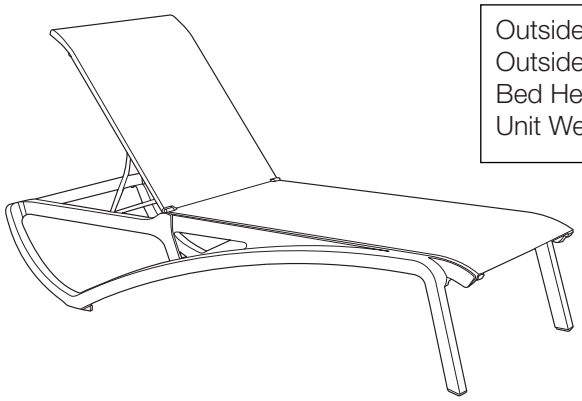

| | |
|---|---|
| Outside Length: | 75.5” |
| Outside Width: | 30.0” |
| Bed Height: | 15” |
| Unit Weight: | 38.3 lbs |

# Sunset Chaise Lounge

## Product Specifications

| Product Description | Reference Number | Color | UPC Code 014306 | Pack Weight Each (lbs.) | Master Pack | Master Pack Volume (cu. ft) |
|---|---|---|---|---|---|---|
| Sunset Chaise Lounge | UT740599 | Cognac/Fusion Bz | 946764 | 44.20 | 12 | 114.64 |
| | UT047599 | Cognac/Fusion Bz | 946764 | 47.70 | 2 | 31.92 |
| | UT740288 | Solid Gray/Vol Blk | 946740 | 44.20 | 12 | 114.64 |
| | UT047288 | Solid Gray/Vol Blk | 946740 | 47.70 | 2 | 31.92 |
| | UT740289 | Solid Gray/Plat Gray | 946757 | 44.20 | 12 | 114.64 |
| | UT047289 | Solid Gray/Plat Gray | 946757 | 47.70 | 2 | 31.92 |
| | UT740096 | White/Glacier Wh | 946733 | 44.20 | 12 | 114.64 |
| | UT047096 | White/Glacier Wh | 946733 | 47.70 | 2 | 31.92 |
| | UT741599 | Beige/Fusion Bz | 946726 | 44.20 | 12 | 114.64 |
| | UT147599 | Beige/Fusion Bz | 946726 | 47.70 | 2 | 31.92 |
| | UT741096 | Madras Blue/Glacier Wh | 946696 | 44.20 | 12 | 114.64 |
| | UT147096 | Madras Blue/Glacier Wh | 946696 | 47.70 | 2 | 31.92 |
| | UT742096 | Beige/Glacier Wh | 946719 | 44.20 | 12 | 114.64 |
| | UT247096 | Beige/Glacier Wh | 946719 | 47.70 | 2 | 31.92 |
| | UT741288 | Madras Blue/Vol Blk | 946702 | 44.20 | 12 | 114.64 |
| | UT147288 | Madras Blue/Vol Blk | 946702 | 47.70 | 2 | 31.92 |
| | | | | | | |
| | | | | | | |

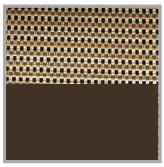
Cognac/
Fusion Bronze

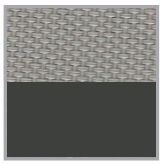
Solid Gray/
Volcanic Black

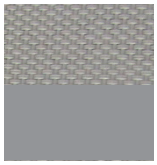
Solid Gray/
Platinum Gray

White/
Glacier White

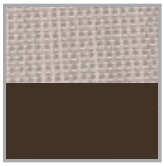
Beige/
Fusion Bronze

Madras Blue/
Glacier White

Beige/
Glacier White

Madras Blue/
Volcanic Black



www.grosfillexfurniture.com • gfxcustomerservice@grosfillex.com

# Sunset Chaise Lounge

## Features & Benefits — Warranty: 3 Yrs.

- Passes ASTM-B performance standard for commercial outdoor lounging
- Made of Grosfillex® new technopolymer with Air Molding Technology (AMT) to increase durability with the strength of metal
- Sophisticated and versatile: Perfect for relaxing in luxurious settings - from pools & spas to ski & beach resorts
- Rust & U.V. resistant - Easy to clean and to maintain
- Recessed wheels for ease of relocation
- Sling has Microban® anti-microbial treatment. Microban® is a registered trademark of Microban International, Ltd.
- Stacks for easy storage

## Spare Parts

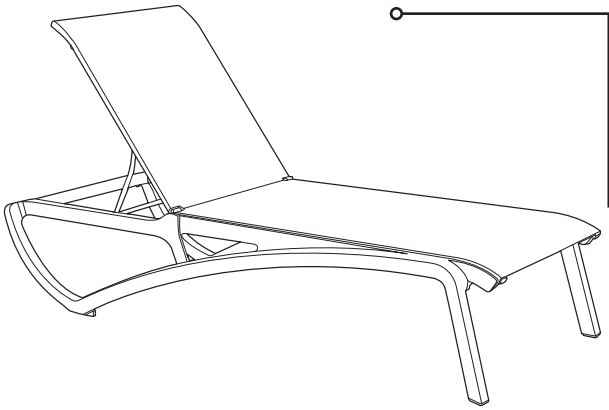

x6 Standard Screws

Sling Hardware Kit USSP0323

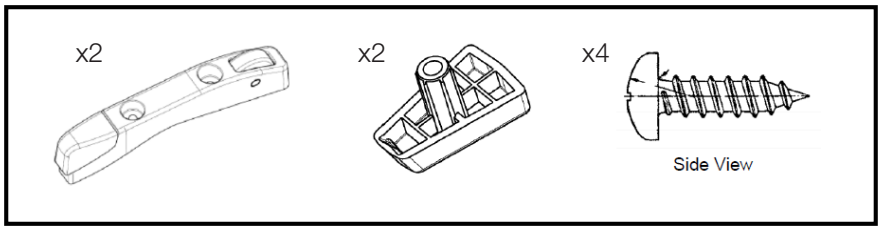


Footpads USSP0301 & USSP0310

| Reference | Description |
|---|---|
| USSP0301 | FOOTPADS SET SUNSET CHAISE NATURAL |
| USSP0310 | FOOTPADS SET SUNSET CHAISE BLACK |
| USSP0323 | REPL SLING HDW KIT SUNSET BDS |