Tools Required



Safety Glasses

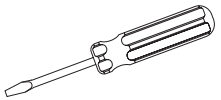

Flat Screwdriver



Prybar

Remove Cosmetic Back

Step 1

Pry rearwards on lower corners with fingers or with a flat bladed tool such as screwdriver or prybar.

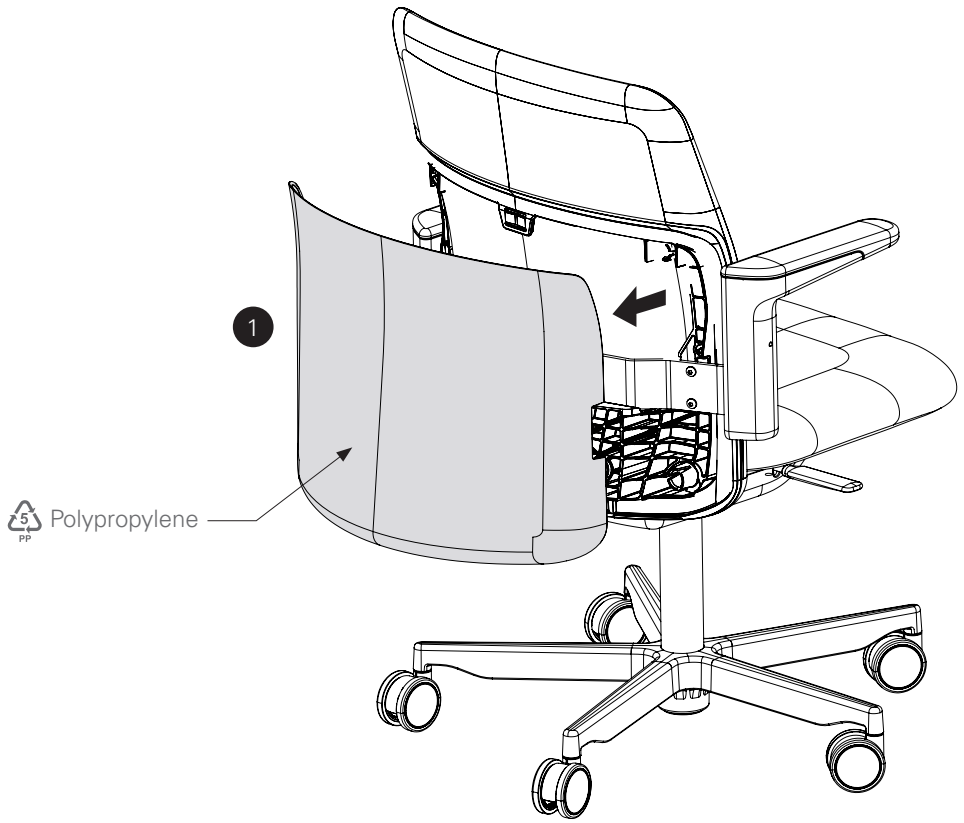

Tools Required



Safety Glasses



4mm Allen Wrench

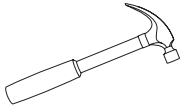

Hammer

Remove Arm Assembly

Step 1
If adjustable arms, adjust to highest position.

Step 2
Set chair on its back.

Step 3
Using a 4mm Allen wrench remove 2 set screws as indicated above.

Step 4
Arm should wiggle off of plate, but a hammer may be required to hit it off.

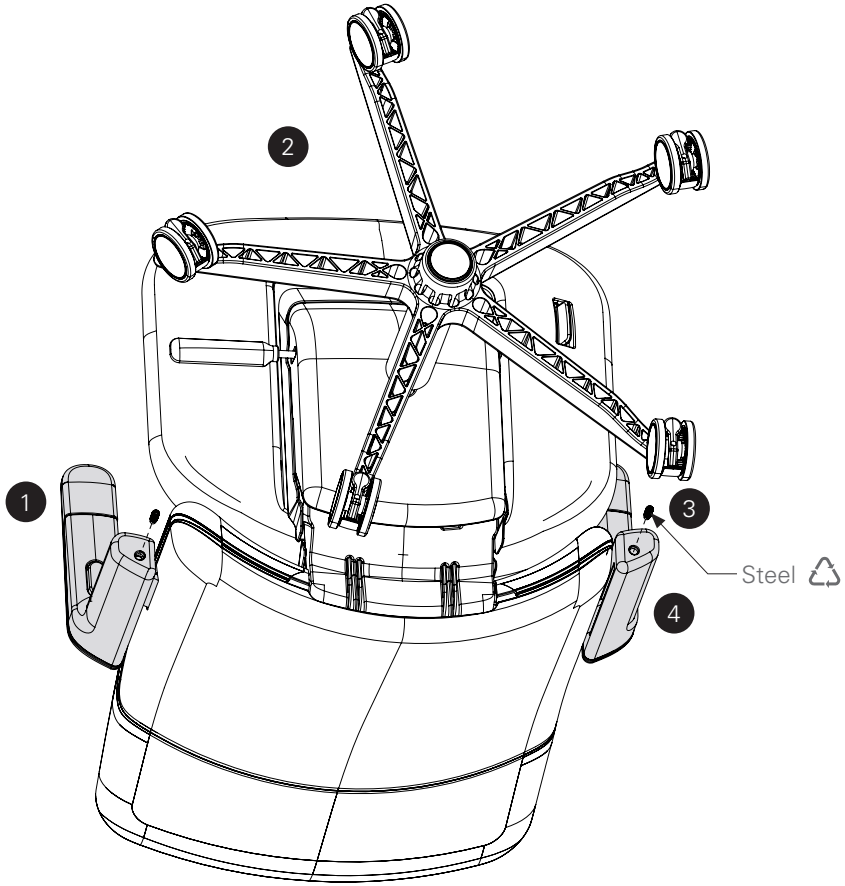

Tools Required



Safety Glasses

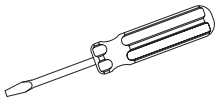

Flat Screwdriver



Sheet Metal Screw

Remove Arm Pad Assembly from Arm

Step 1a
On adjustable arm, use a flat bladed screwdriver to pry out cover as shown (will remove pin with the cover).

Step 1b
For Fixed arm, use a smaller sheet metal screw to lock into hole shown and then pull out the pin.

Step 2
Lift up on rear of arm pad and slide forwards to remove.

This completes fixed arm disassembly. Arm pad components on the fixed arm assembly do not easily separate from the nylon structure. See next page to continue adjustable arm disassembly.

Adjustable Arm

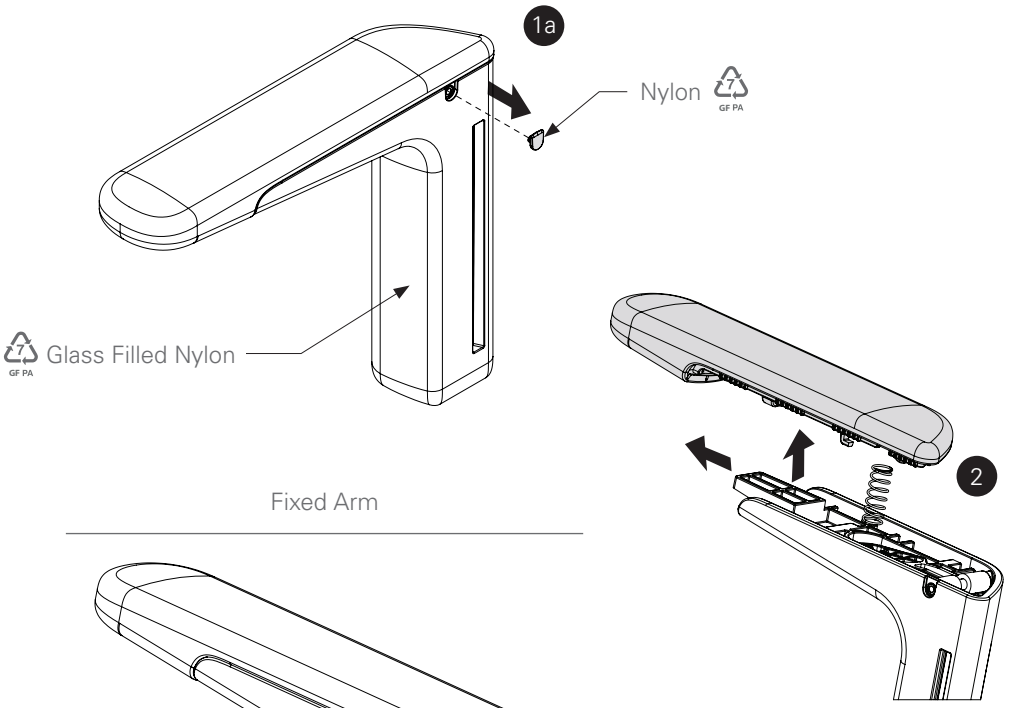

Fixed Arm

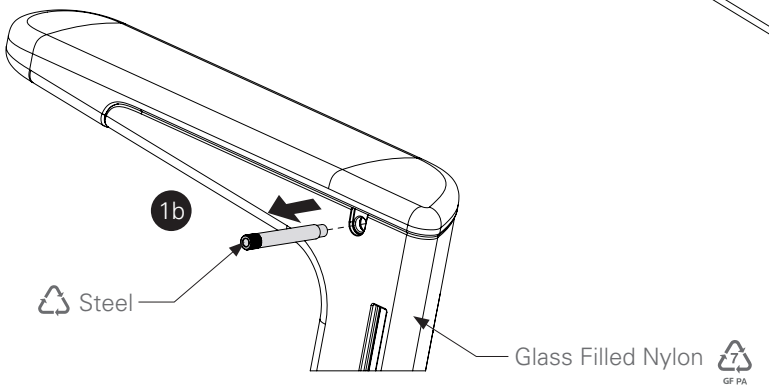

Tools Required



Safety Glasses

Separate Arm Pad Components

Step 1
On adjustable arms, the urethane skin can be peeled off and the urethane foam, removed. Structure is glass filled nylon.

Note: Fixed arms have a self-skinning urethane that cannot easily be separated from the glass filled nylon structure (not pictured here).

Adjustable Arm Pad Components

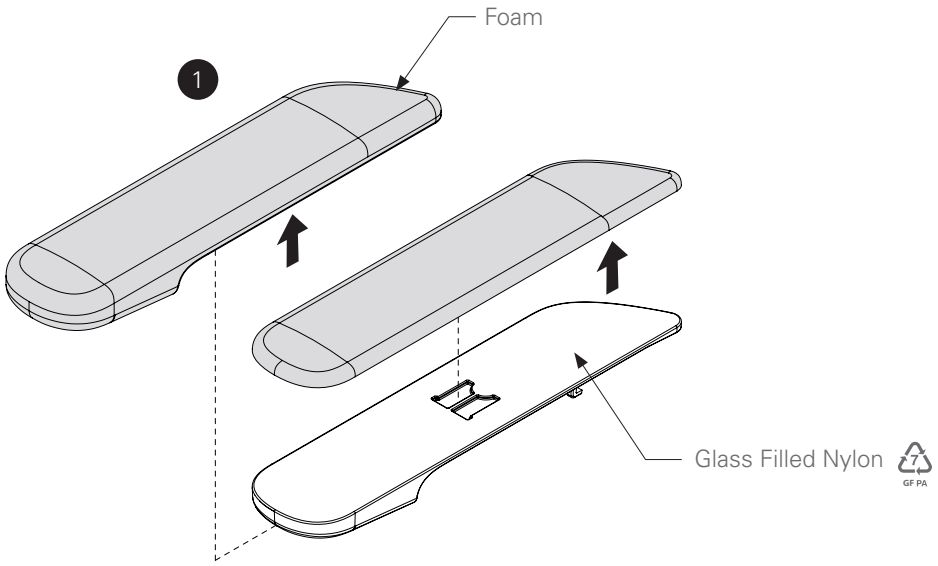

Tools Required



Safety Glasses

Finish Disassembly of Adjustable Arms

Step 1
With release lever engaged, lift the lever up to remove it and arm's inner structure from the arm housing.

Step 2
Remove tolerance rings (2X) from inner structure.

Step 3
Remove bumpers (2X) from inner structure.

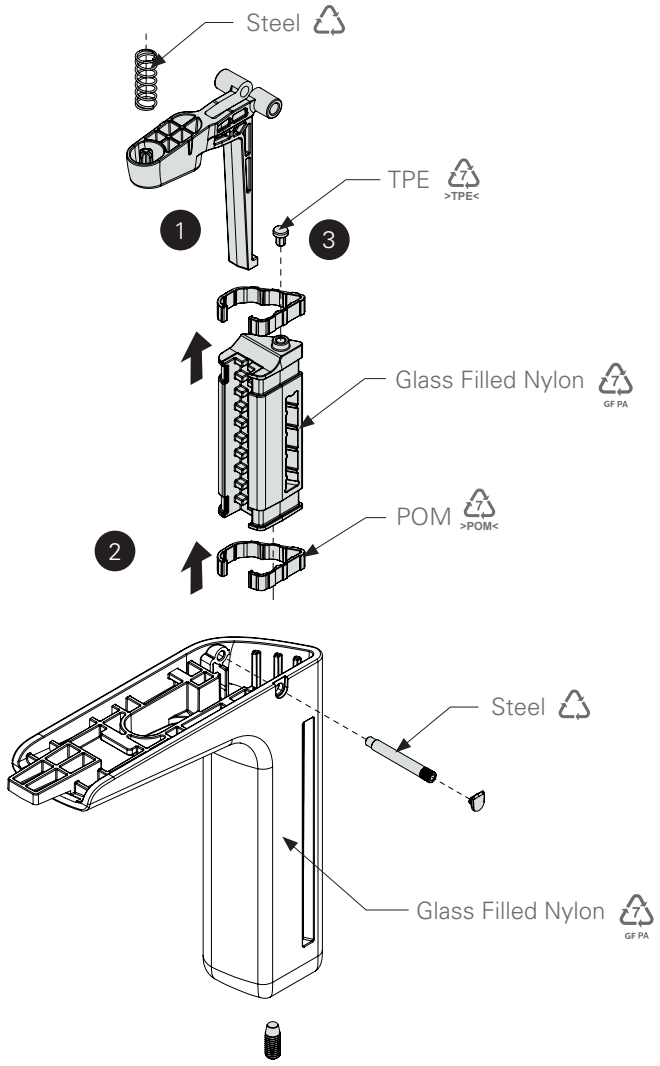

Tools Required



Safety Glasses

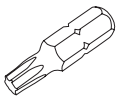

T-30 Torx Bit

Remove Arm Steel

Step 1
Using a T-30 torx bit, remove the (x6) screws holding the arm steel in place. Lift arm steel until it stops then slide (left or right) to remove screws and plate.

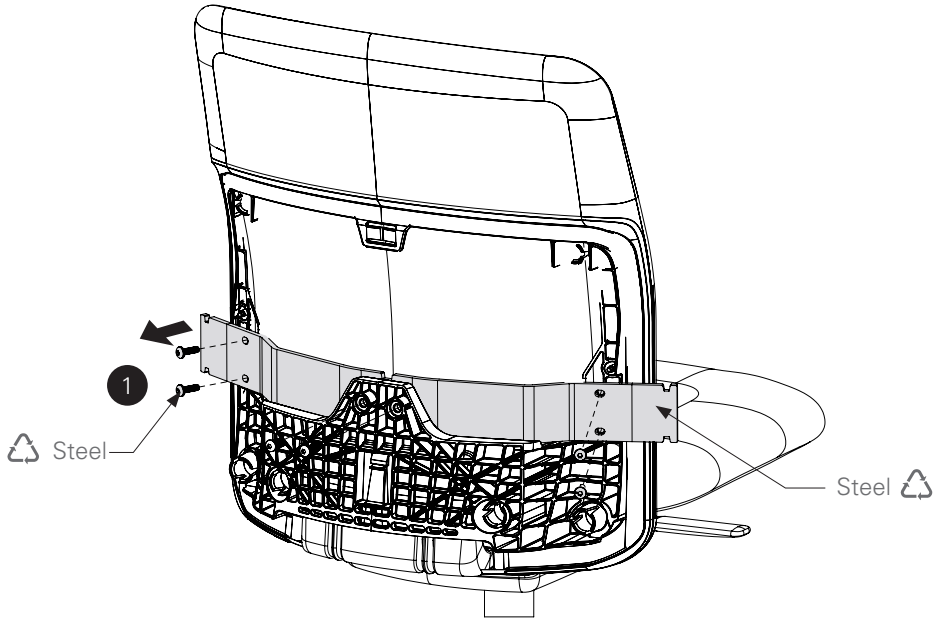

Tools Required



Safety Glasses

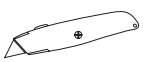

Knife



Scissor

Remove Back Upholstery

Step 1

Using a hot knife, utility knife, or scissors, cut away the fabric just outside the stapled area to separate from the back frame.

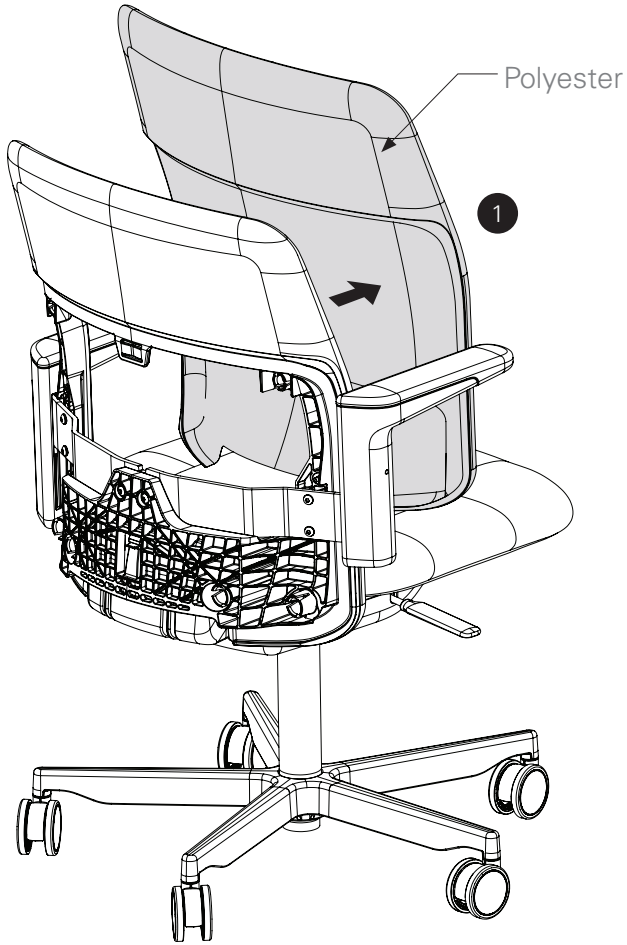

Tools Required



Safety Glasses

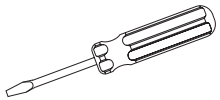

Flat Screwdriver

Remove Upper Back Foam from Back

Step 1
Pry off upper back foam using a flat bladed screwdriver.
Foam can be peeled off.

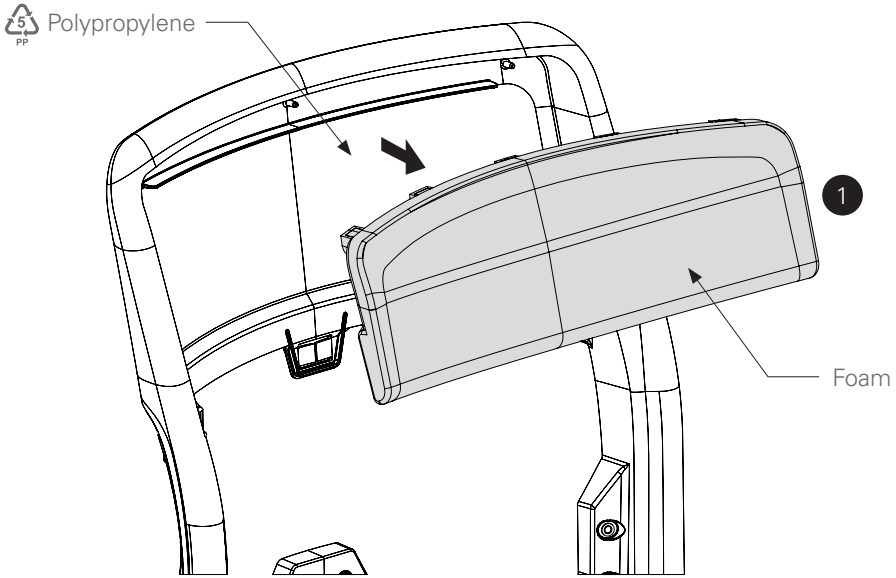

Tools Required


Safety Glasses

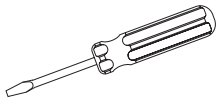
Flat Screwdriver

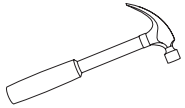
Hammer

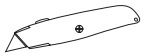
Knife


Scissor

Remove Back

Step 1
Using a flat bladed screwdriver, pry the snap (indicated here) upwards. The back should lift off the mechanism. It may require hitting the bottom of the component upwards, with a hammer while prying the snap.

Step 2
Using a hot knife, utility knife, or scissors, cut away the fabric just outside the stapled area to separate from the back frame (not pictured here).

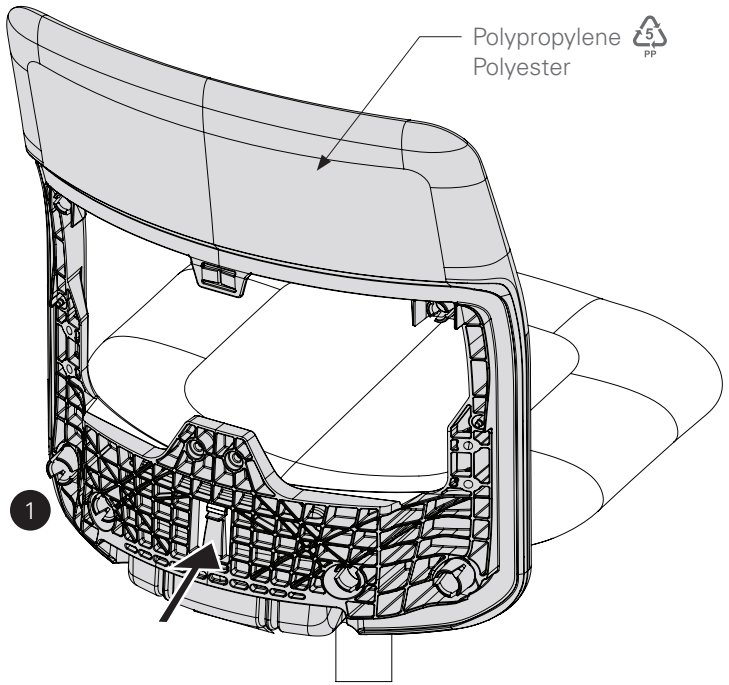

Tools Required


Safety Glasses

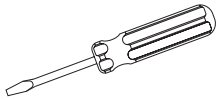
Flat Screwdriver


Prybar

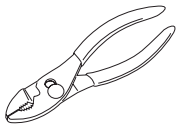
Plier

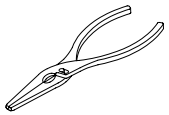
Needle Nose Plier

Remove Seat Assembly

See-through View of Seat

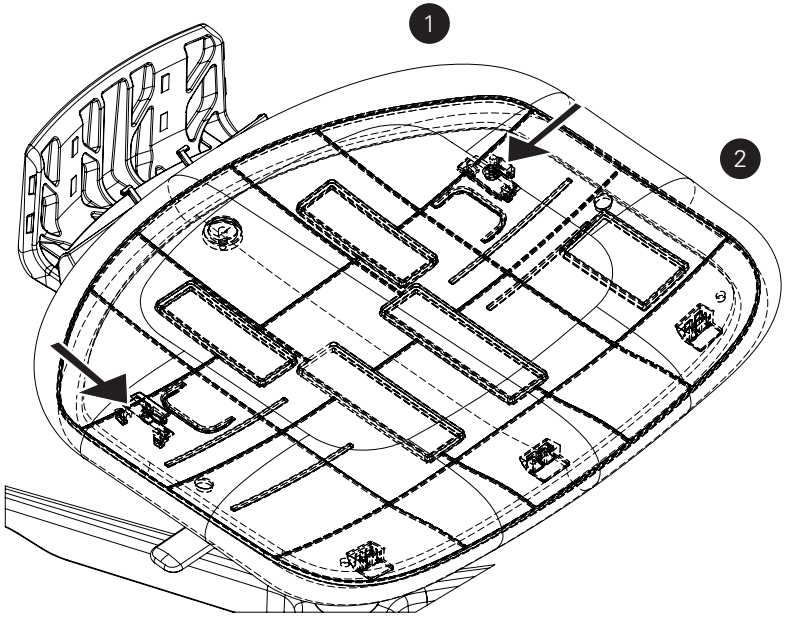

Step 1
Pry off seat upholstery from back corners using flat bladed screwdriver or prybar.

Note: Location of clips identified with arrows.

Step 2
After clips release, slide seat upholstery to rear and lift to remove.

Note: Clips may remain in upholstery plate or seat structure. Remove from either. May require use of slip-joint or needle-nose pliers to remove if still in seat structure.

Tools Required



Safety Glasses

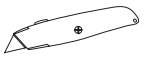

Knife



Scissor

Remove Seat Upholstery and Foam

Step 1
Using a hot knife, scissors or utility knife, cut away fabric just outside of staples. Alternatively, can pry out staples to completely remove the fabric.

Step 2
Foam is easily separated from inner structure.

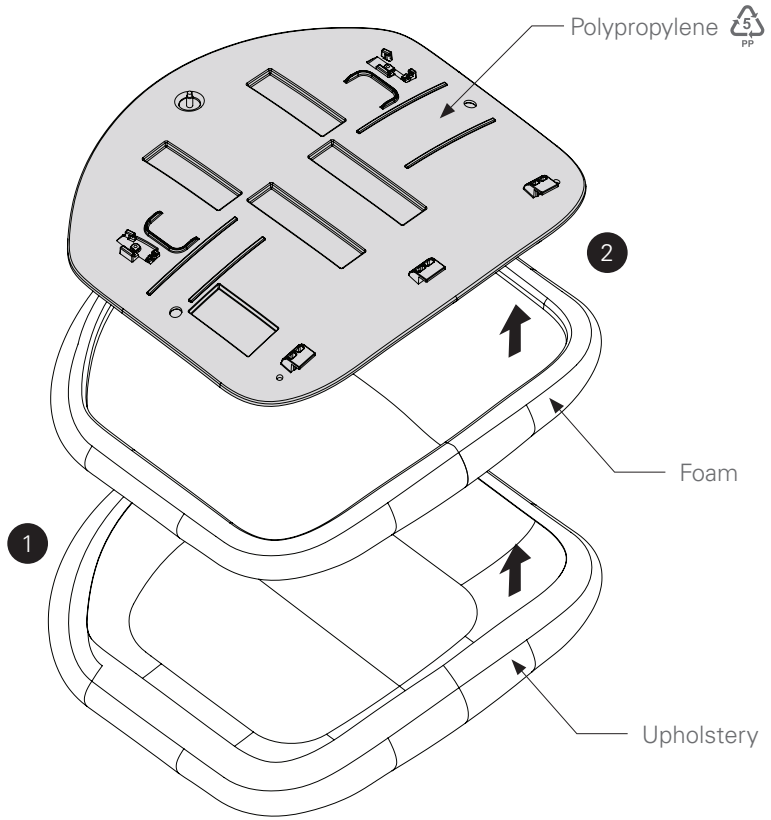

Tools Required



Safety Glasses

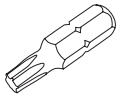

T-30 Torx Bit

Remove Seat Structure Assembly

Step 1
Use a T-30 Torx bit to remove (4) screws and washers from seat structure.

Step 2
Seat structure will lift off of the mechanism.

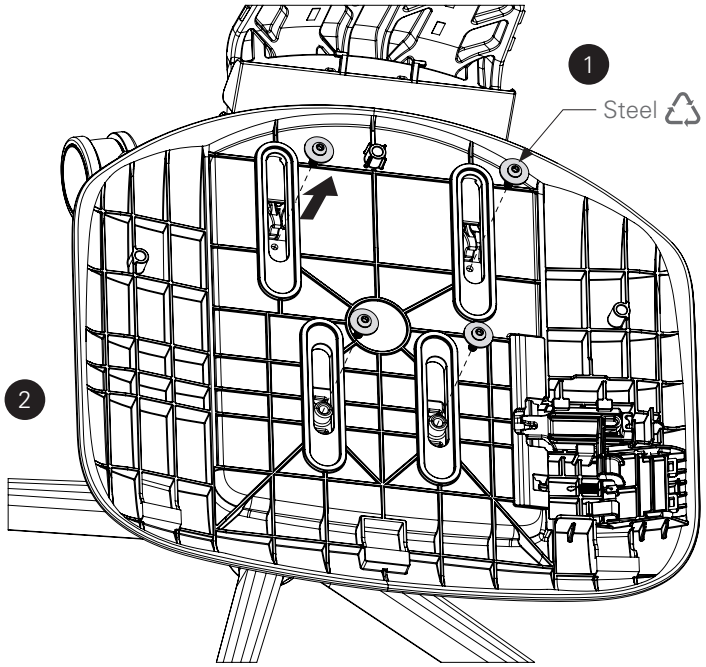

Tools Required



Safety Glasses

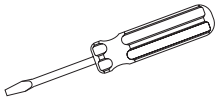

Flat Screwdriver

Remove Seat Slide Lock System

Step 1
Pry up tab (identified with arrow) on seat slide release using a flat bladed screwdriver and push inward. It will pop free of the structure.

Step 2
Unhook spring from structure and seat slide release.

Step 3
Push lock plate inwards to remove a spring underneath it. Remove both.

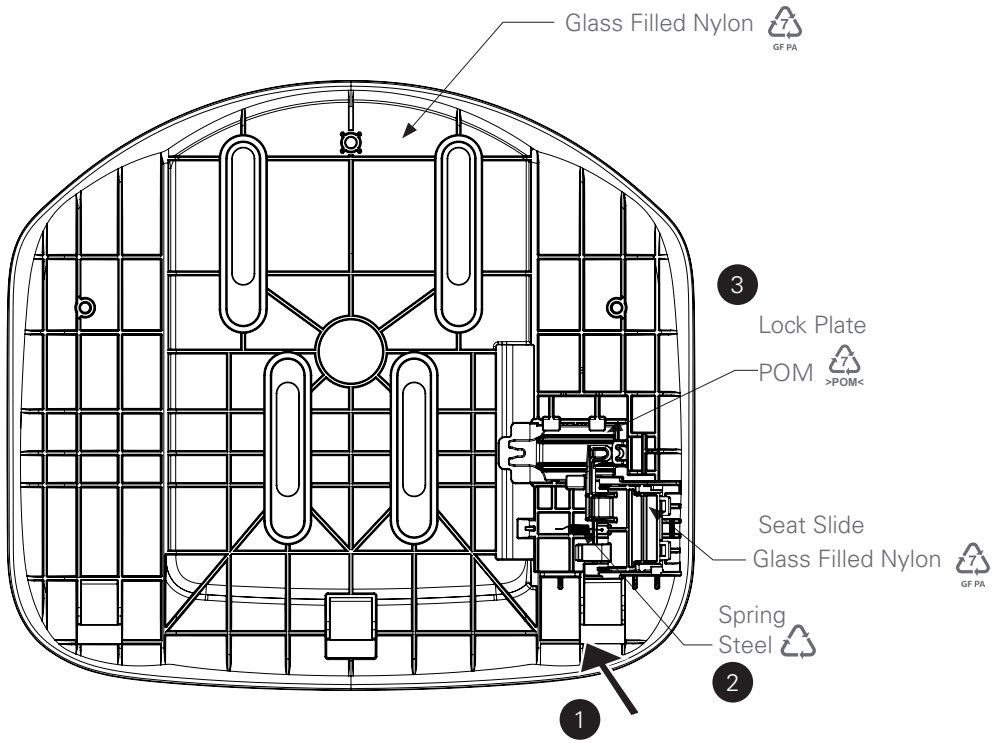

Tools Required



Safety Glasses



Phillips Bit

Remove Shroud from Top Plate Assembly

Step 1
Use a Phillips bit to remove (3) screws.

Step 2
Once released - dis-engage tabs from slots they are contained in to finish removal.

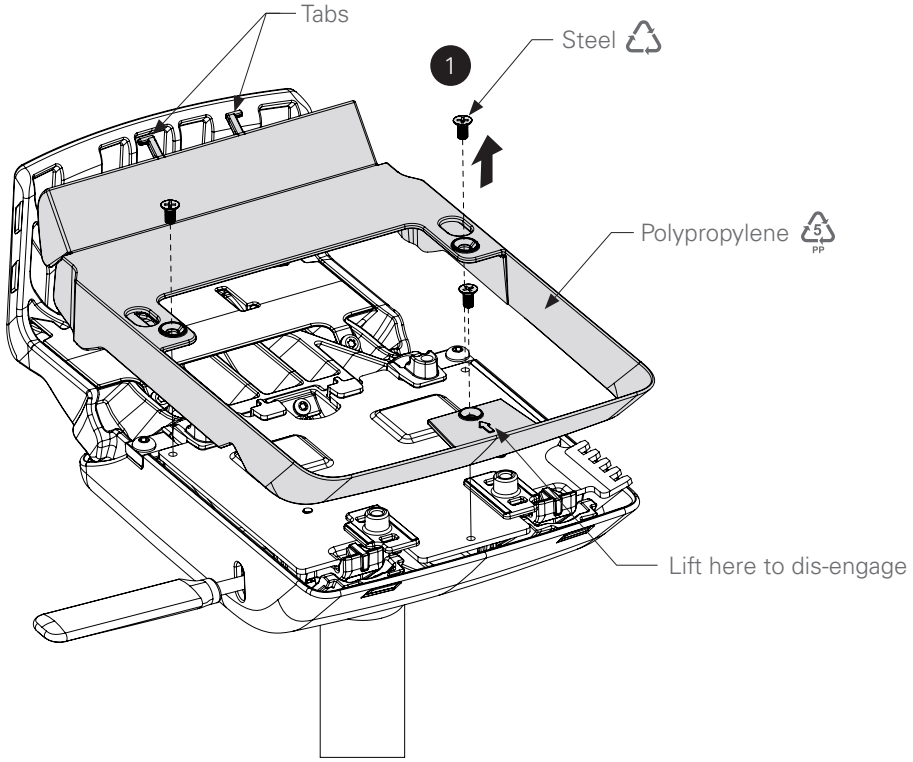

Tools Required



Safety Glasses

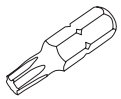

T-27 Torx Bit

Remove Top Plate Assembly

Step 1
Use a T-27 Torx bit to remove screw and plastic pedestal under the screw.

Step 2
Press downwards on connector at rear of mechanism to recline it. While reclined, lift the front of plastic part at the front of mechanism to release it.

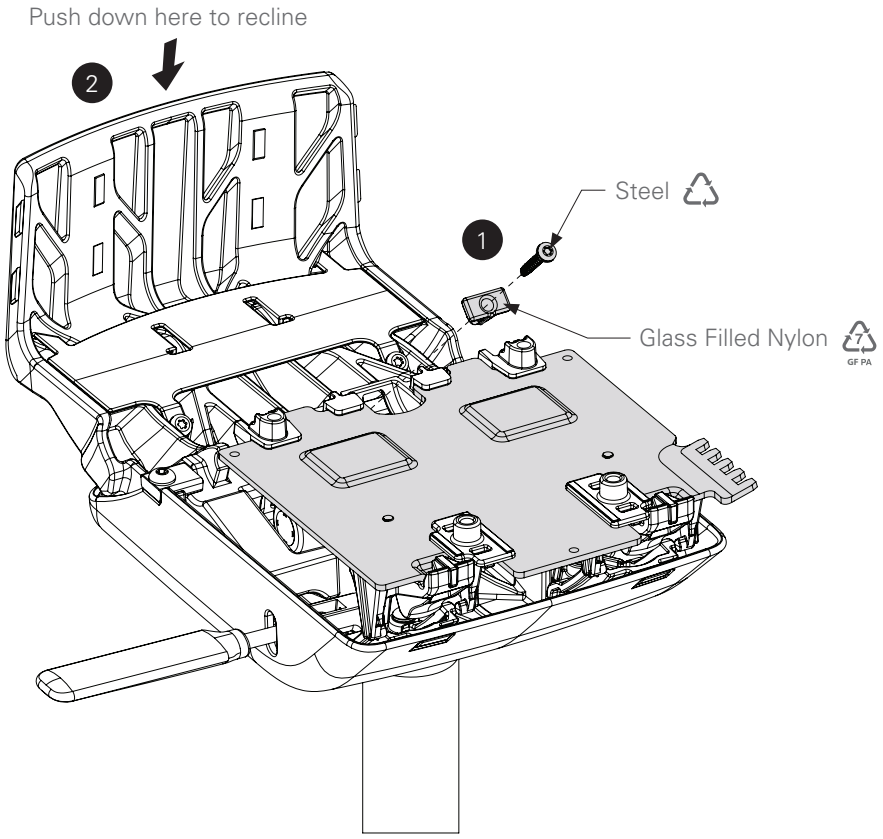

Tools Required



Safety Glasses

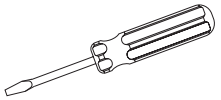

Flat Screwdriver

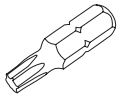

T-30 Torx Bit

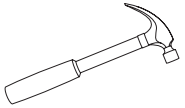

Hammer

Complete Dis-assembly of top plate

Step 1
Use a T-30 Torx bit to remove (2) screws from glides and remove from plate.

Step 2
Use a hammer to remove seat pivot from rear of plate.

Step 3
Use a flat bladed screwdriver to release snaps (indicated with arrows in second image) on seat slide bearings (x2).

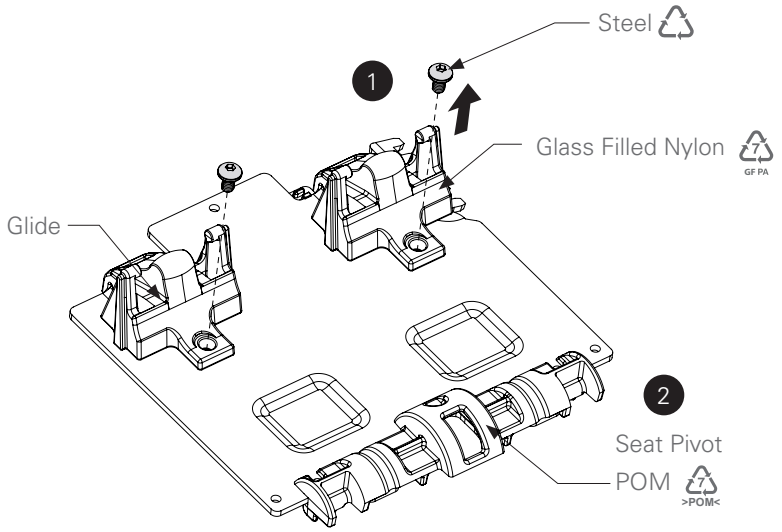

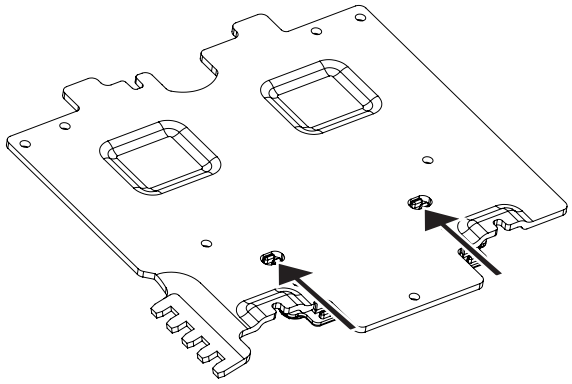

Tools Required



Safety Glasses

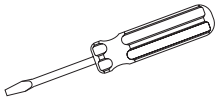

Flat Screwdriver



Prybar

Remove Seat Height Lever

Step 1
Use a prybar to remove seat slide lever. Steel rod may remain in mechanism or level and can be removed with vise from either part.

Step 2
Use a flat bladed screwdriver to release snaps on seat slide bearings (x2).

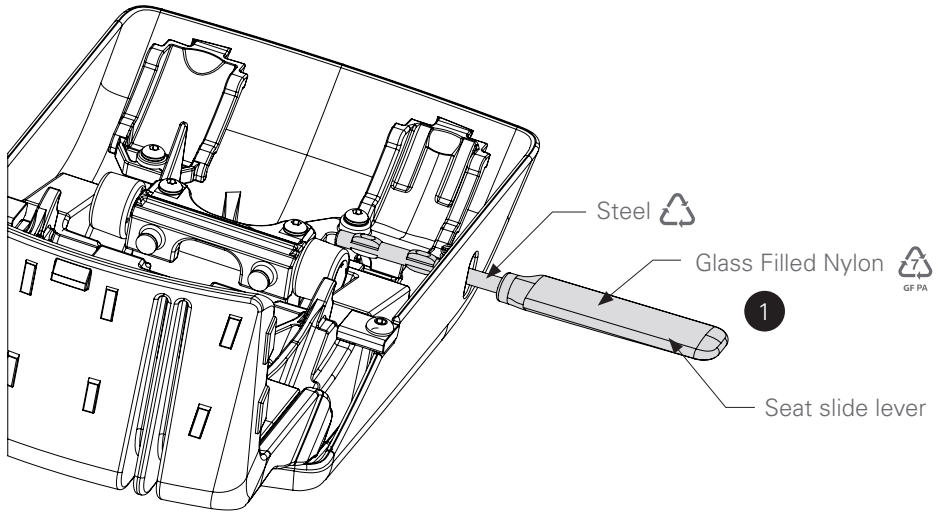

Tools Required



Safety Glasses

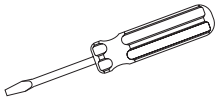

Flat Screwdriver

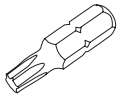

T-30 Torx Bit

Remove Internal Components from Mechanism

Step 1
Use a T-30 Torx bit to remove 7 screws from housing This will allow removal of the axle cap, LH & RH seat Ramps, height actuation lever and spring retainers (these must be pried up from aluminum housing and away from connector to remove).

Step 2
Remove (2) bumpers from axle cap.

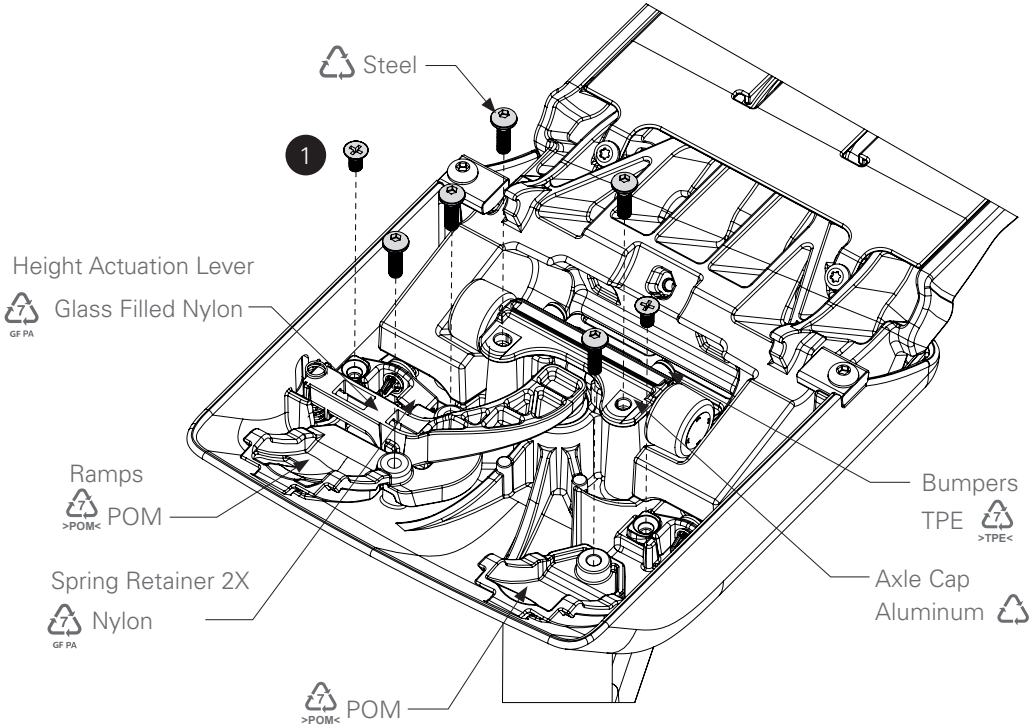

Tools Required



Safety Glasses

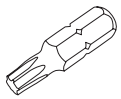

T-40 Torx Bit

Remove Connector Assembly

Step 1
Lift out Front Axle and front rollers.

Step 2
Use a T-40 Torx bit to remove (2) screws holding connector retainers in place.

Note: Hold connector assembly while removing last screw. When removing last screw, it will want to fall rearwards.

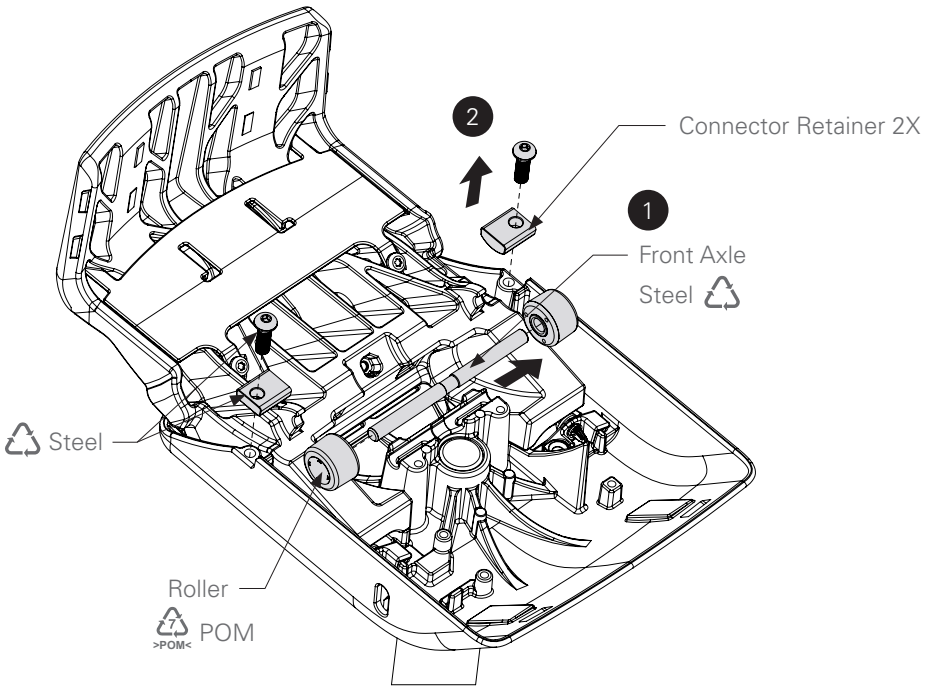

Tools Required


Safety Glasses

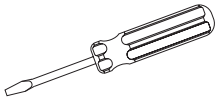
Flat Screwdriver

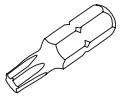
T-30 Torx Bit

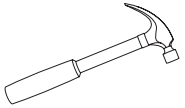
Hammer

Complete Disassembly of Connector

Step 1
Use a T-30 Torx bit to remove (2) screws.

Step 2
Place punch or screwdriver in access holes indicated by arrows to left and hammer the punch or screwdriver to remover rear rollers and axles (2X).

Step 3
Using a flat bladed screwdriver and hammer, from the underside (as pictured in bottom right), extract dowel pins. This will allow removal of the spring plunger.

Step 4
Unwind springs off of spring plungers (2X).

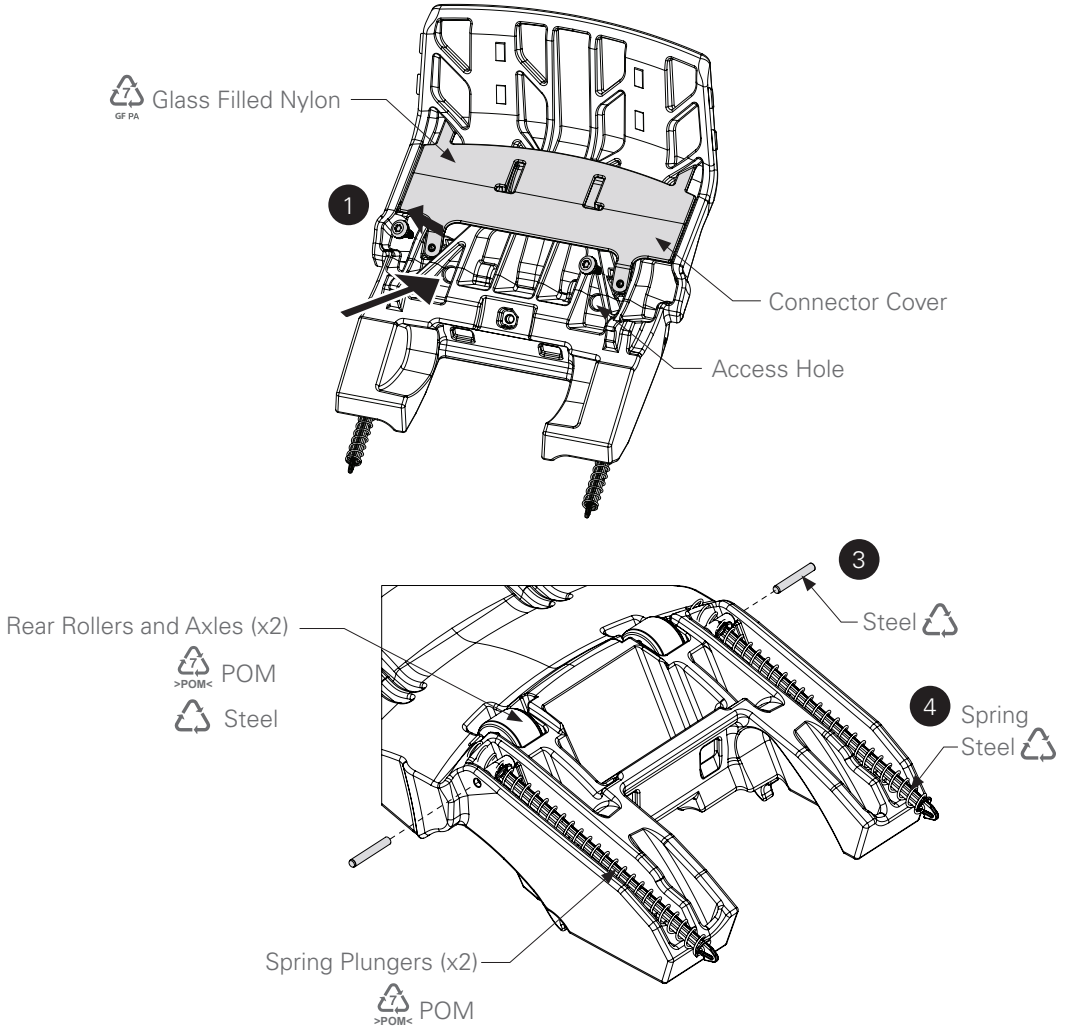

Tools Required



Safety Glasses

Remove Bumpers from Housing

Step 1
Remove bumpers (2X) from housing.

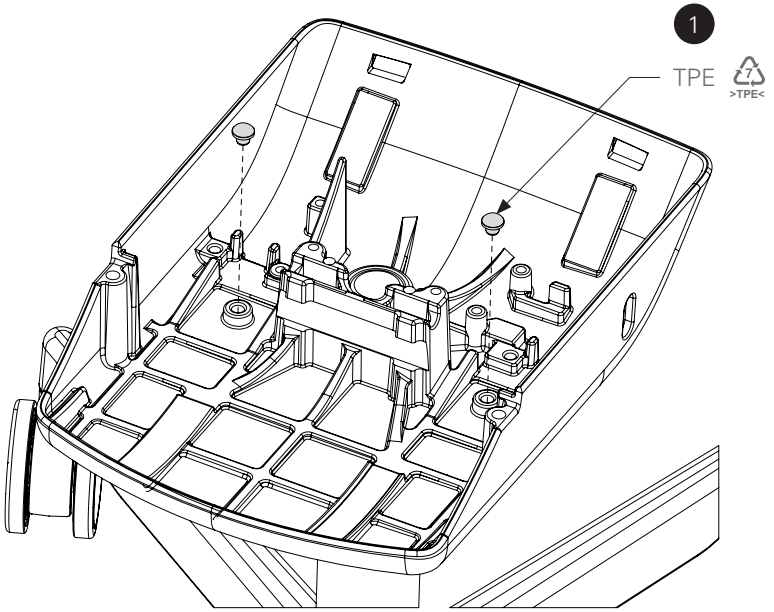

Tools Required



Safety Glasses

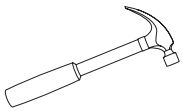

Hammer

Separate Housing and Gas Cylinder

Step 1
Using a hammer, hit bottom center of gas cylinder while pulling upward on base until they separate.

Step 2
Use a hammer to hit the underside of housing while holding the gas cylinder until it dislodges from the gas cylinder.

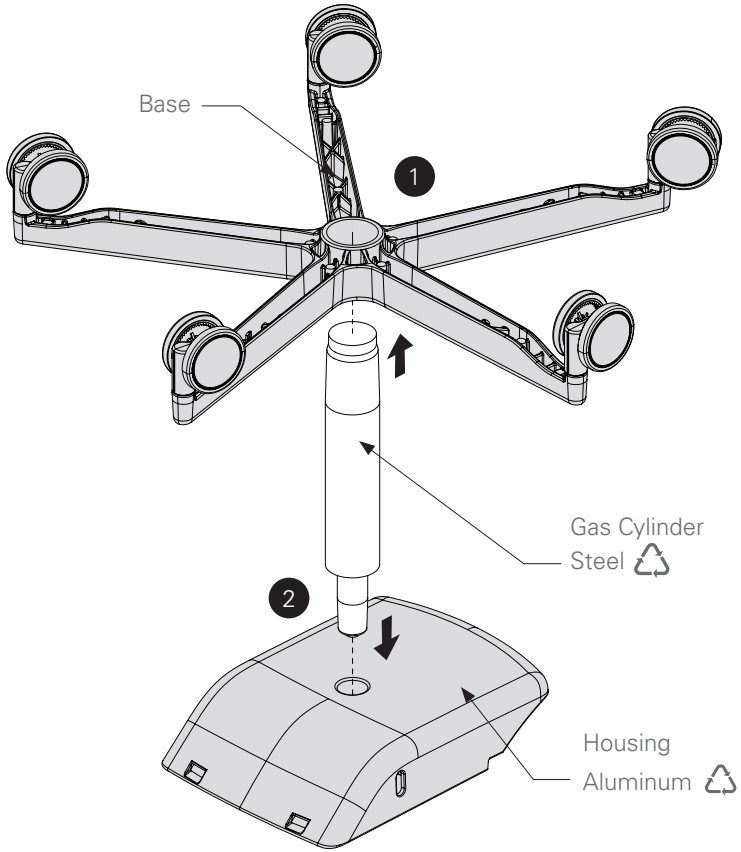

Tools Required



Safety Glasses

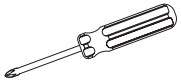

Phillips Head Screwdriver



Prybar

Remove Casters from Base

Step 1
Orient casters to center of base.

Step 2
Use pry bar to remove the caster (5X) from the base.

