Household Treadmill Instruction Manual

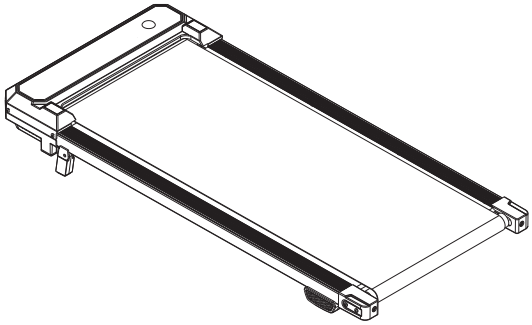

Contents

1. Cover Page & Pre-Use Notes .....(2)

2. Safety Precautions .....(3)

3. Product Diagram and Parts List.....(4)

4. Assembly Instructions .....(6)

5. Display & Operation .....(8)

6. Exercise Guidelines .....(11)

7. Incline Adjustment Method .....(12)

8. Maintenance .....(14)

9. Troubleshooting.....(18)

10. Product Specifications & Warranty.....(20)

Caution To ensure safe use, please read this manual carefully and fully understand the contents before operation.

1. Cover & Before Use

Thank you very much for your purchase.

Please contact us if any issues such as damage during transportation, missing parts, error code display, or malfunctions occur. We will provide you with a satisfactory solution.

E-mail: service_sports@163.com

Please provide:

·Order Number

·Details of Product Issues

(Attach relevant images/videos if applicable)

Before using this product, be sure to read the "Safety Precautions" carefully and handle it correctly.

2. Safety Precautions

Please read the following symbols and instructions carefully, and use the product safely and correctly.

Icon	Meaning	Specific Precautions
	Warning	**Electric Shock and Fire Prevention** · Do not use in wet or humid areas under any circumstances. · Do not damage the power cord or place it near heat sources. · Be sure to unplug the power plug during maintenance. **Handle with at least two adults.** · Be sure to have at least two adults move or unpack the main unit.
	Prohibited	**Injury Prevention** · Please ensure children and pets do not play around the machine. **Prohibited Forced Operation** · Do not disassemble or modify the product under any circum stances – this may cause serious malfunctions or accidents. **User's Health** · Individuals with chronic illnesses, pregnant individuals, or the elderly should consult a physician before use. · If you feel unwell during training, stop immediately.
	Caution	**Power Check** · Do not bend the power cord or place it near heat sources. before use, check that the power plug is firmly connected. **Correct Installation and Use** · Install on a flat and stable surface. · Ensure adequate space. · Use a dedicated power outlet. Do not share it with other devices. **Health Status Check** · Individuals with chronic illnesses or pregnant individuals should consult a physician before use.

3. Product Diagram and Parts List

● Product Diagram

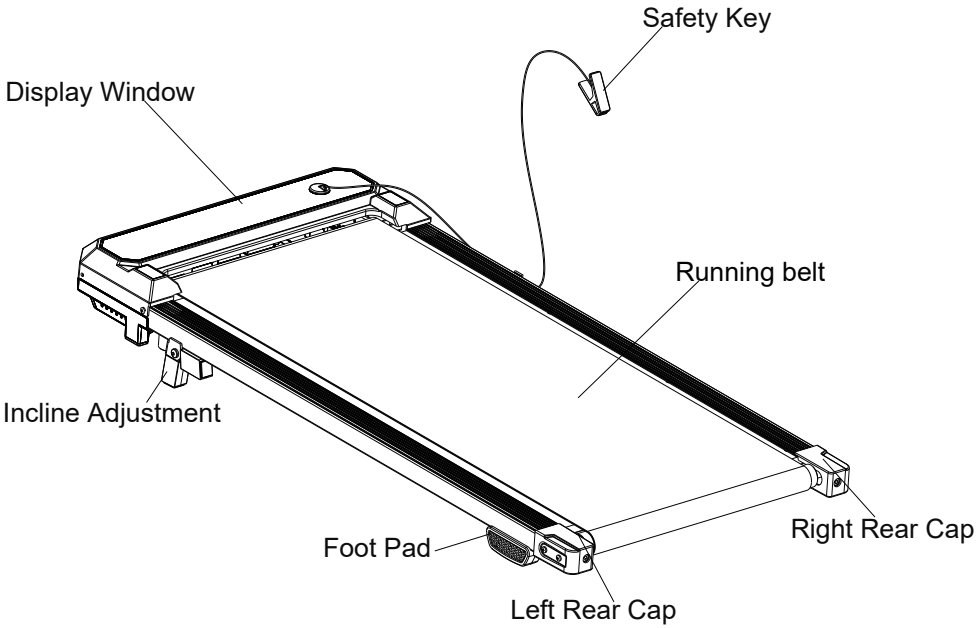

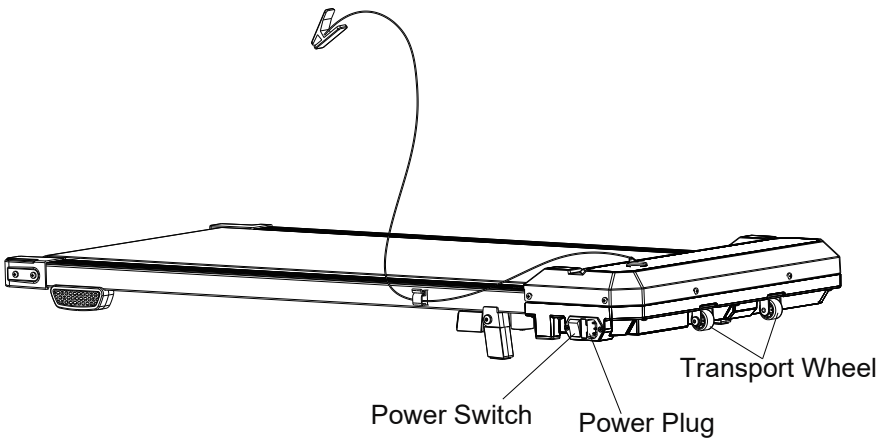

Note: Our products are constantly being improved and may be modified without prior notice. We appreciate your understanding.

No.	List	Part Name	Qty
1		Treadmill machine	1
2	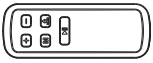	Remote Control	1
3		Hex Wrench	1
4		Power Cord	1
5		Boost	2
6	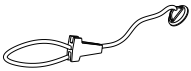	Safety Key	1
7		Safety Key Cord Clip	1

4. Assembly Instructions

Assembly work must be performed by two or more adults.

STEP 1

1. Choose flat ground to place the Walking Treadmill.

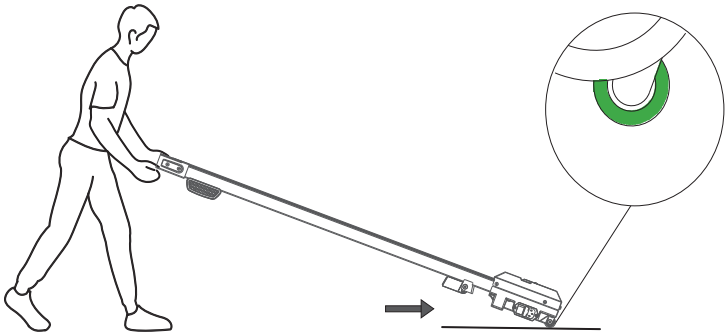

STEP 2

1. Power on and start to running.

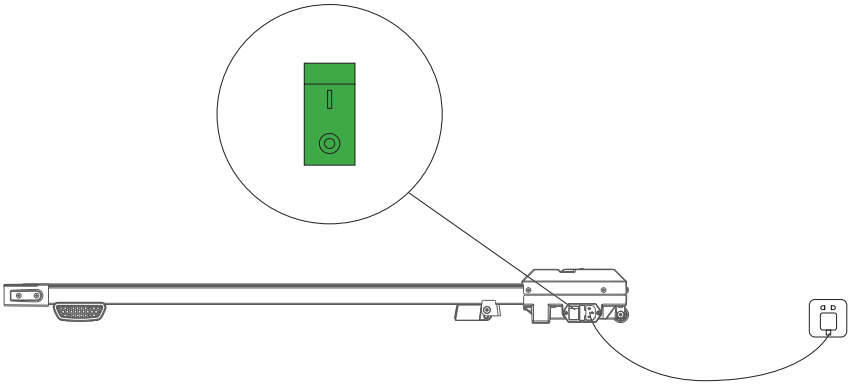

Installation has been completed!

Safety Key Installation:

1. Place the small round end of the safety key (6) onto the corresponding position on the motor cover.

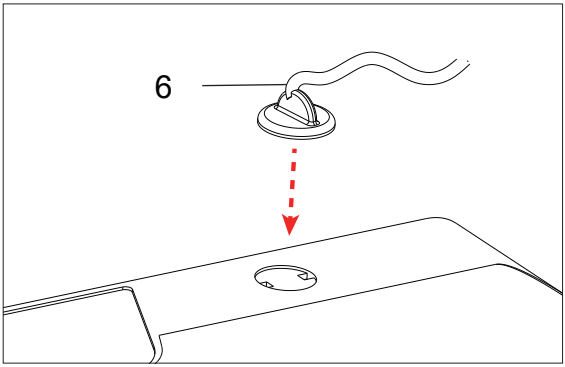

2. Attach the safety key cord clip (7) to the right edge of the running deck as shown.
3. Open the clip, pass the safety key cord through it, then close the clip to secure the cord.
4. Attach the clip on the other end of the safety key to your clothing.
Ensure the safety key is properly secured before operating the treadmill.

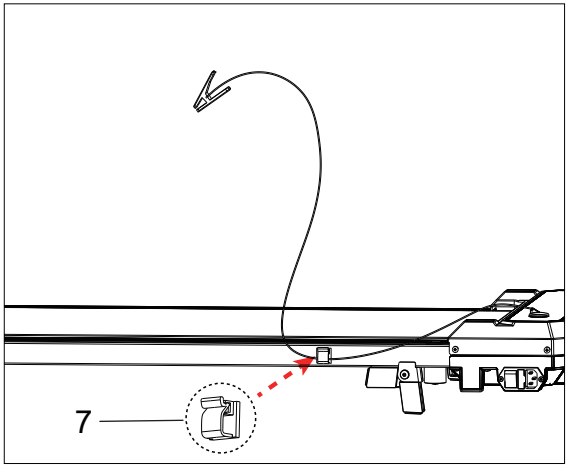

5. Display and Operation

1. Display Window

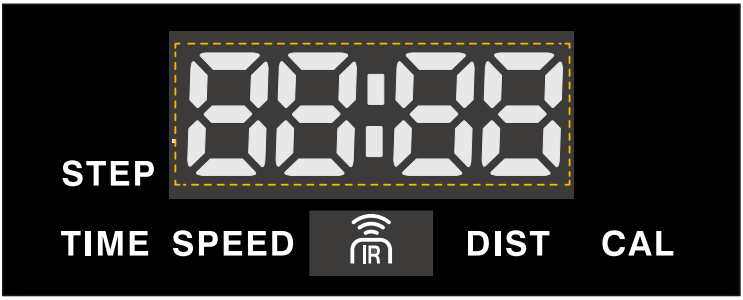

Display	Content
◆ TIME	Exercise Time or Countdown Remaining Time
◆ SPEED	Current Speed (1 - 8 KM/H / 0.6 - 5 MPH)
◆ DISTANCE	Distance Traveled or Countdown Remaining Distance
◆ CALORIE	Calories Burned or Countdown Remaining Calories
◆ STEP	Steps Taken or Countdown Remaining Steps

Remote:

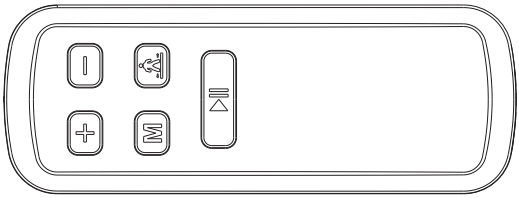

1. Press this button to start the walking belt. The default initial speed is 1 KM/H.
2. Press this button to pause your workout. To resume, press it again.
3. Hold this button to stop the walking belt when your workout is complete.

1. Press or hold this button to accelerate. The speed increases by 0.5 KM/H each time.

1. Press or hold this button to decelerate. The speed decreases by 0.5 KM/H each time.

1. Customize workout goals (e.g. Time, Calories, Distance, Step Count).

1. When the treadmill is stopped, pressing this button will switch to fat burn mode.

The features of the console buttons are identical to those of the remote control.

Attention: Please get off the treadmill when you intend to use the console buttons to control it.

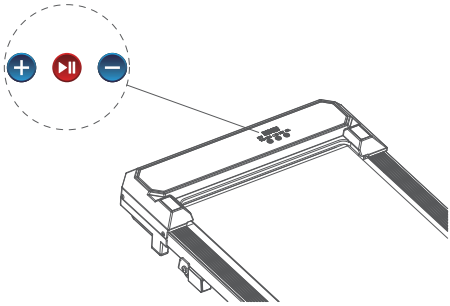

Fat shedding mode

When the treadmill is stopped, pressing this button can switch to the fat shedding mode. This mode has 6 levels, and the vibration speed can be adjusted to your desired setting using the plus and minus buttons on the remote control.

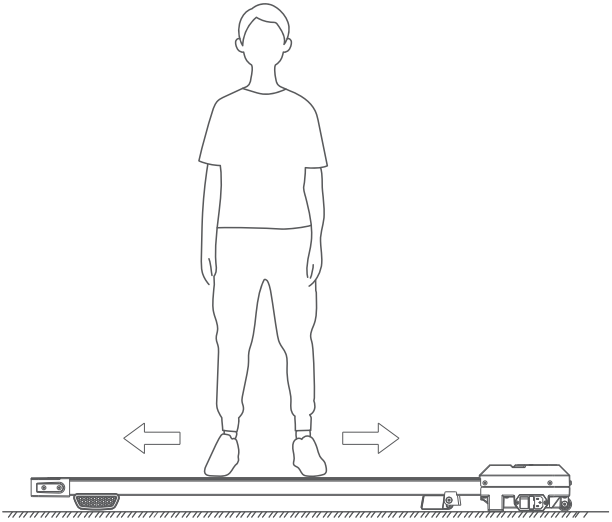

Note:
The fat shedding mode is once every 5 minutes, and after the end, let the machine rest for at least 20 minutes.

6. Exercise Guidelines

◆Warm-up

Before using the unit, please perform a 5-10 minute warm-up.

◆Breathing

Do not hold your breath during exercise. Coordinate your breathing with your movements. If your breathing becomes too labored, stop exercising immediately.

◆Frequency

Allow 48 hours of rest between training the same muscle groups – that is, please train the same groups every other day.

◆Load

Determine training intensity based on your individual physical condition, then proceed with training following the principle of progressive overload. At the start of training, muscle soreness is normal. The soreness will subside as you continue training.

◆Diet

To protect your digestive system, exercise at least 1 hour after meals. After training, wait at least 30 minutes before consuming a meal. Do not consume excessive water during exercise – especially avoid drinking large amounts of water at once – to avoid increasing the burden on your heart and kidneys.

◆Stretching Exercises

No matter how fast you run, it is advisable to perform stretches first. Warmed-up muscles are easier to stretch, so warm up for 5-10 minutes. Then, stop briefly to perform the following 5 stretches. Hold each stretch for 10 seconds or more per leg, and repeat them again at the end of your workout.

1. Forward Bend Stretch

Bend your knees slightly, slowly bend forward, relax your back and shoulders, and reach for your toes with your hands. Hold for 10-15 seconds, then relax. Repeat 3 times (see Figure 1).

2. Hamstrings Stretch

Sit on a clean mat, extend one leg. Bend the other leg inward and press it firmly against the inner side of the extended leg. Reach for the toes with your hands. Hold for 10-15 seconds, then relax. Repeat 3 times per leg (see Figure 2).

3. Calf and Achilles Tendon Stretch

Place both hands on a wall or table, step one leg back, and stand. Keep the back leg straight, heel flat on the floor, and lean your weight forward toward the wall or table. Hold for 10-15 seconds, then relax. Repeat 3 times per leg (see Figure 3).

4. Quadriceps Stretch

Use your right hand to balance on a wall or table, reach back with your left hand, grab your left ankle, and slowly pull it toward your glutes. Hold the position for about 10-15 seconds when you feel a full stretch in the front of your thigh. Then relax. Repeat 3 times per leg (see Figure 4).

5. Adductors Stretch (Inner Thigh Muscles)

Sit with the soles of your feet together, pointing your knees outward. Hold your feet with both hands and pull them toward your body. Hold for 10-15 seconds, then relax. Repeat 3 times (see Figure 5).

7. Incline Adjustment Method

Two levels of incline allow you to adjust the training intensity.

Incline Adjustment

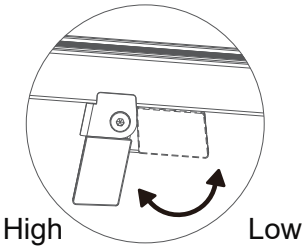

To achieve a higher incline, please insert the support leg into the pocket (if included).

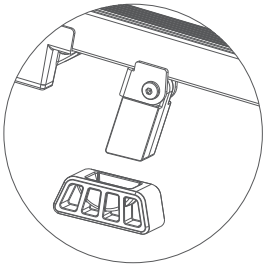

①Pull up the adjustment lever at the rear of the main unit.

②With the lever lifted, slide the main unit and align it with your desired incline level (Level 1 or Level 2).

③Release the lever and confirm that the main unit is fully locked.

Note: When using the incline, we recommend attaching the included auxiliary foot pad to the rear feet.

8. Maintenance

Running Belt Adjustment Method

This product allows you to adjust the tension of the running belt by turning the belt adjustment bolts located at the rear part of the running deck.

Check: Turn on the power, run the belt at a speed of approximately 3-5 KM/H, and check if it runs straight.

Please perform the adjustment with the power turned off and the plug unplugged.
Adjustment Tips: For each adjustment, turn no more than a 1/4 rotation.
After adjustment, turn on the power, run it at low speed, and check the condition.

Case 1: If the belt is shifting to one side

Symptom: The belt shifts left or right, rubs against the main unit frame, and produces abnormal noise.

1

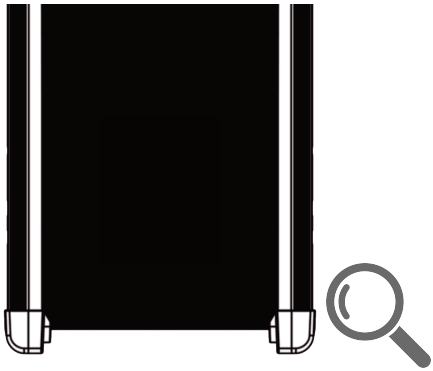

Check the deviation direction: Check which direction the belt is shifting.

2

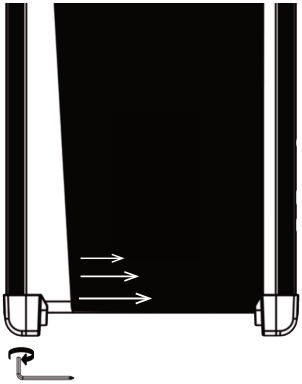

Tighten the opposite side: If the belt shifts to the right, use a hex wrench to turn the left adjustment bolt clockwise by 1/4 rotation and tighten it. If it shifts to the left, turn the right adjustment bolt clockwise by 1/4 rotation and tighten it.

3

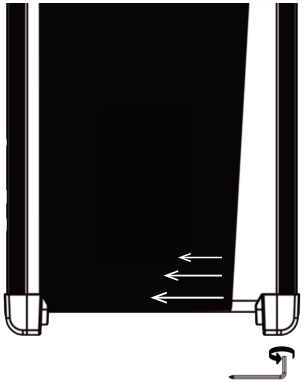

Tighten the opposite side: If the belt shifts to the left, use a hex wrench to turn the right adjustment bolt clockwise by 1/4 rotation and tighten it. If it shifts to the right, turn the left adjustment bolt clockwise by 1/4 rotation and tighten it.

Case 2: If the belt slips or pauses

Symptom: While walking or running, the belt slips under your feet, or the belt stops even though the motor is running.

1

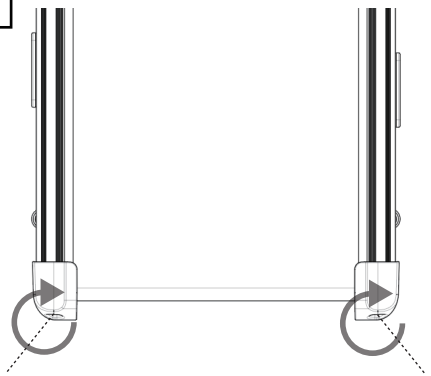

Tighten both sides evenly: Use a hex wrench to tighten the left and right adjustment bolts at the rear part of the main unit evenly, turning each clockwise by 1/4 rotation at a time.

2

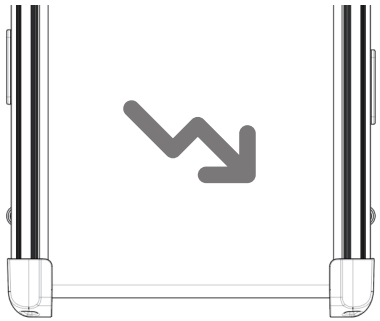

Check: Actually run it at low speed and check if the slipping has been resolved.

3

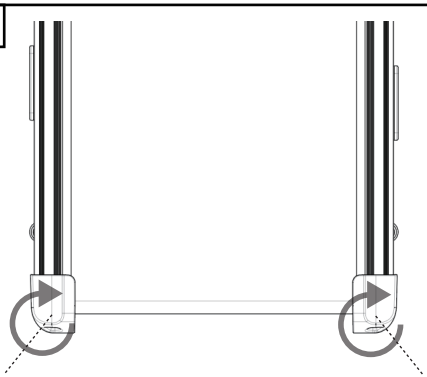

Repeat: If the slipping persists, repeat evenly tightening both sides

Case3: If the belt is over-tightened

Symptom: The belt is extremely stiff with no slack, and the motor feels overloaded.

1

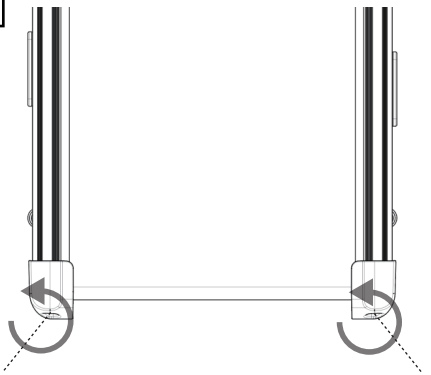

Loosen both sides evenly: Use a hex wrench to loosen the left and right adjustment bolts at the rear part of the main unit evenly, turning each counterclockwise by 1/4 rotation at a time.

2

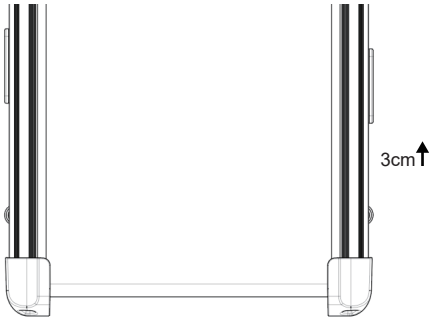

Check the slack: After adjustment, when the unit is stopped, lift the center of the belt and check if it rises about 3 cm to verify proper tension.

3

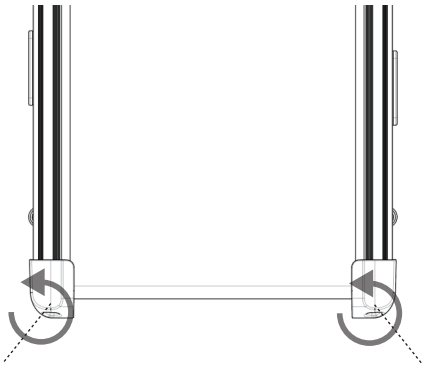

Repeat: If the tension is too tight, repeat this process.

▼ Click here for the detailed video of the adjustment method ▼

9. Troubleshooting

Symptoms	Cause	Specific Precautions
No working	1. Power rocker switch dysfunction. 2. Power supply interrupted. 3. Power cord damaged.	1. Replace the power rocker switch with a new one if it does not light up. 2. Ensure the power cord is plugged into a properly grounded outlet. 3. Replace the power cable with a new one.
Walking belt slips	1. The walking belt is loose.	1. Tighten the walking belt tension with the hex wrench.
Remote control does not work	1. Power rocker switch dysfunction. 2. Power supply interrupted. 3. Power cord damaged.	1. Replace the power rocker switch with a new one if it does not light up. 2. Ensure the power cord is plugged into a properly grounded outlet. 3. Replace the power cable with a new one.
Friction noise	1. The walking belt is off-center.	1.See details in Chapter 8. Maintenance.

Error Code Reference Table

Error Code	Error Description	Recommended Action
E01	1. Communication interrupted between controller and numeric display.	1. Unscrew the motor hood and verify the connection between the controller and numeric display. 2. If the E01 code persists, contact after-sales service.
E02	Flame protection	1. Unscrew motor hood and verify connection between controller and motor. 2. Power supply interrupt due to connector loosen or out, please unscrew motor hood to check. 3. Please contact with after sale service if problem cannot solved by above process.
E05 / E06	Over current protection	1. Due to the user exceeding the 120 kg weight limit. 2. Open to check for any foreign objects blocking moving parts (such as: drive motor, idler roller, driver roller, walking belt). 3. The walking belt is overtightened or lacks lubricant. (Please see the detailed chapters related to belt tension and lubrication process.)
E07	Software bug	1. Replace the controller with a new one.
E10	1. Communication interrupted between signal cable and console.	1. Unscrew the motor hood and verify the connection of the signal cable. If the E10 error code has not been eliminated, please contact after-sales service.

10. Product Specifications and Warranty

Item	Specifications
Rated Voltage	220-240 V
Frequency	50 Hz
Speed Range	1-8 KM/H (0.6-5 MPH)
Max User Weight	120KGS / 265LBS
Max Power	3.0 HP
Warranty Period	For 1 year from the date of purchase

● Note:

A purchase certificate (such as a receipt) is required when availing of the warranty.Please be sure to keep it.Please dispose of this product in accordance with the waste classification of your local area.

Warranty Coverage: 1-year parts replacement

Customer Support:

Please contact us. 100% Satisfaction Guarantee	
✓	We have professional customer service staff to answer your questions within 24 hours. If you have any questions, please feel free to contact us.
✓	Return Policy: 30-Day Hassle-Free Returns & Exchanges.
✓	Customer Service: A service team providing personalized solutions to ensure 100% customer satisfaction.
✓	Dedicated Maintenance Service: As a commitment to quality and durability, we provide free maintenance tools for orders placed within 6 months.

E-mail: service_sports@163.com

For inquiries regarding this product, please contact us via email.