NOTES:

(N1) 1. FIT / FORM / FUNCTION SHALL FOLLOW PS-E.008.

(N2) 2. APPLY LOCTITE 680.

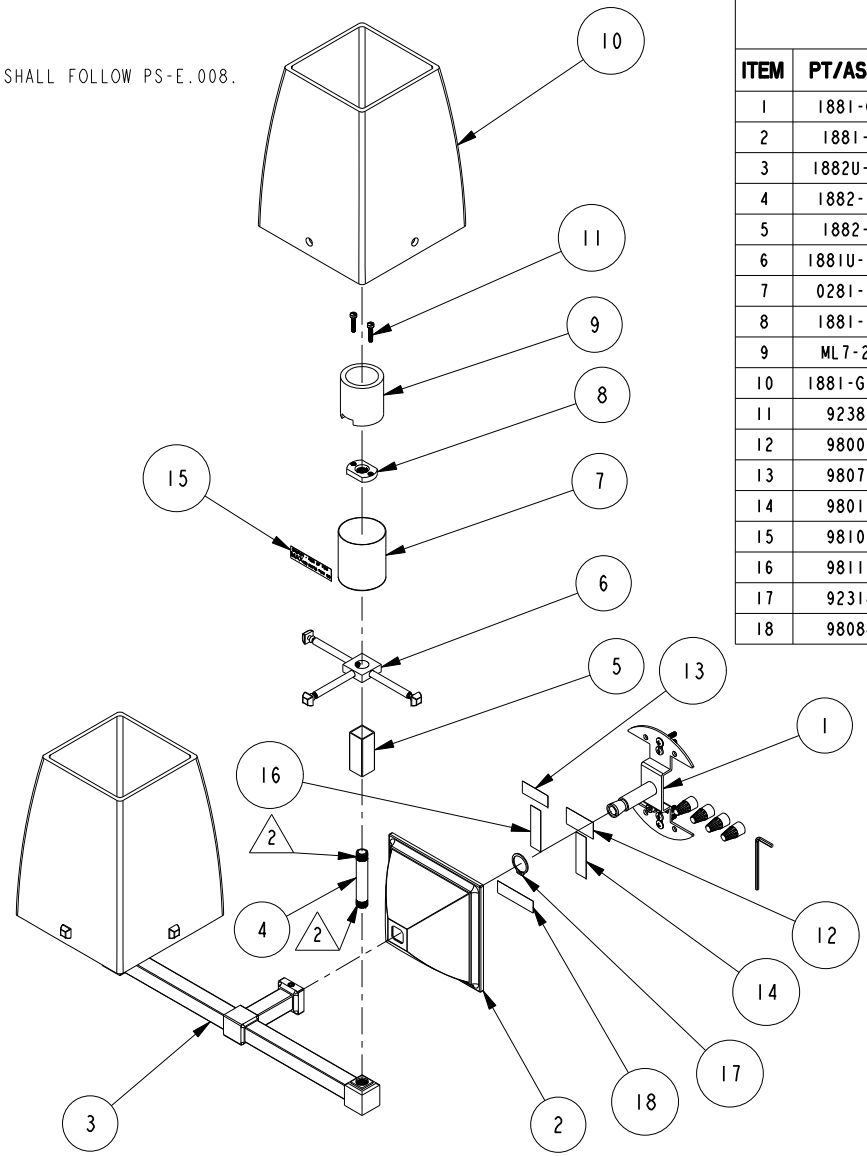

BILL OF MATERIAL (CURRENT LEVEL)

ITEM	PT/ASSY	DESCRIPTION	TYPE	QTY.
1	1881-CB	MOUNTING KIT	ASSEMBLY	1
2	1881-B	QUATTRO LIGHT BASE	PART	1
3	1882U-BA	DOUBLE LIGHT ARM	ASSEMBLY	1
4	1882-RN	RISER NIPPLE- SHORT	PART	2
5	1882-R	RISER TUBE	PART	2
6	1881U-HSA	UP HUB/SPOKE SUB ASM	ASSEMBLY	2
7	0281-LC	LAMP HOLDER CUP	PART	2
8	1881-LA	LAMP HOLDER ADAPTER	PART	2
9	ML7-20	PORCELAIN LAMPHOLDER	PART	2
10	1881-G-SO	GLASS SHADE	PART	2
11	92389	SCRW, 6-32 X 5/8 FILLISTER HD SLT Zn PLATED	PART	4
12	98006	LABEL, UL LISTED	PART	1
13	98079	LABEL, MONTH YEAR E222146	PART	1
14	98012	LABEL, WALL MOUNT ONLY	PART	1
15	98101	LABEL, 100 WATTS MAX	PART	2
16	98113	LABEL,PNXXX INCANDESCENT FOR DAMP LOCATIONS	PART	1
17	92318	SNAP RING, 17MM X 1MM STEEL EXTERNAL	PART	1
18	98088	LABEL, MIN 75 C SUPPLY CONDUCTORS	PART	1

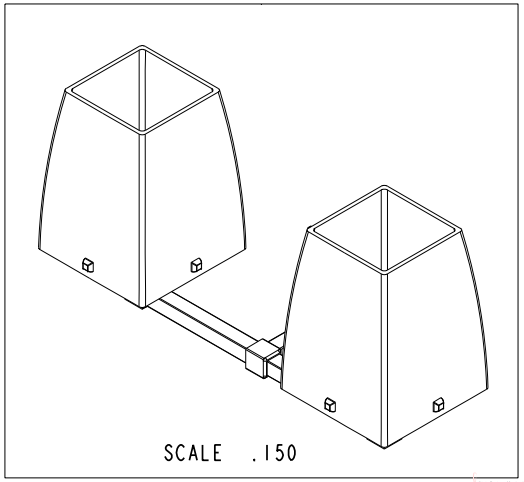

Joe Manga

ZONE	REV	DESCRIPTION	DATE	APPROVED
-	D	EN-3127	08/29/16	R.S
-	C	EN-2461	02/22/13	-
-	B	EN-2329	10/30/12	-
-	A	EN-1314	12/23/09	-

COPYRIGHT 2005 BRASSTECH, INC. THESE DRAWINGS AND THE DESIGNS DEPICTED HEREIN ARE THE PROPRIETARY PROPERTY OF BRASSTECH. ANY USE OR REPRODUCTION IS SUBJECT TO THE EXPRESS APPROVAL OF BRASSTECH. UNAUTHORIZED USE IS STRICTLY PROHIBITED. ALL RIGHTS RESERVED.

TESTING	-	-	-
ASSEMBLY	-	-	-
PLATING	-	-	-
POLISHING	-	NEXT ASSY	USED ON
MACHINING	-	APPLICATION	
TOOLING FIXTURE #		REMOVE ALL BURRS AND SHARP EDGES	

UNITS ARE: INCHES [MM]
TOLERANCES ARE:
FRACTIONS ±1/16" DECIMALS .X ±.1 [2,5] .XX ±.06 [1,5] ANGLES ±1°

(X.XXX) DENOTES CRITICAL DIMS.
ALL THREADS ARE CRITICAL

DRAWN	AMARISH	08/29/16
CHECKED	RAVINDRA	08/29/16
APPROVED	R.S	08/29/16

BRASSTECH INCORPORATED
2001 CARNEGIE AVE.
SANTA ANA, CA 92705
(949) 417-5207

DOUBLE LIGHT GENERAL ARRANGEMENT

DWG NO. 1882U REV D

SCALE .150 REF. - SHEET 1 OF 3

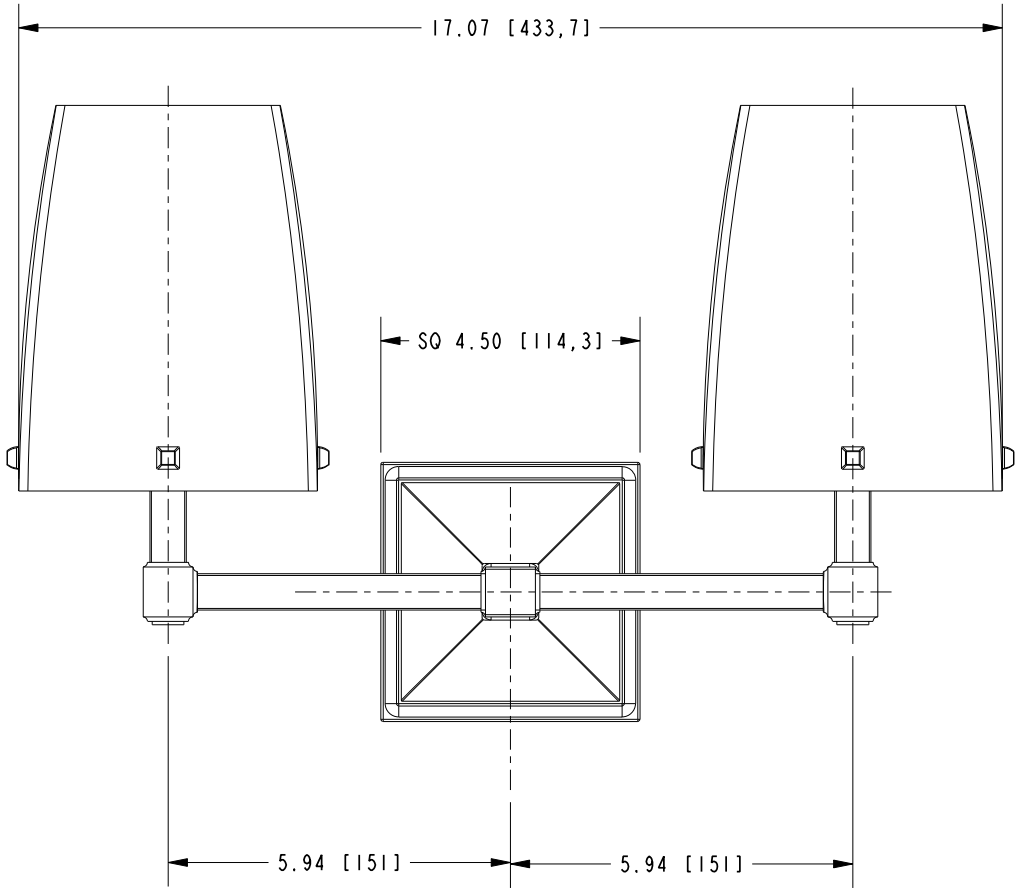

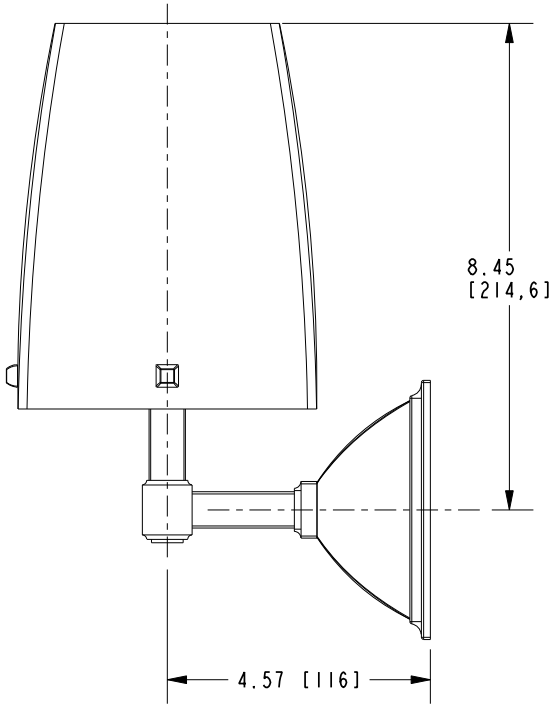

BRASSTECH INCORPORATED
2001 E. CARNEGIE AVE.
SANTA ANA, CA 92705
(949) 417-5207

DWG NO.	REV
1882U	D

SCALE	REF.	SHEET
.300	-	2 OF 3

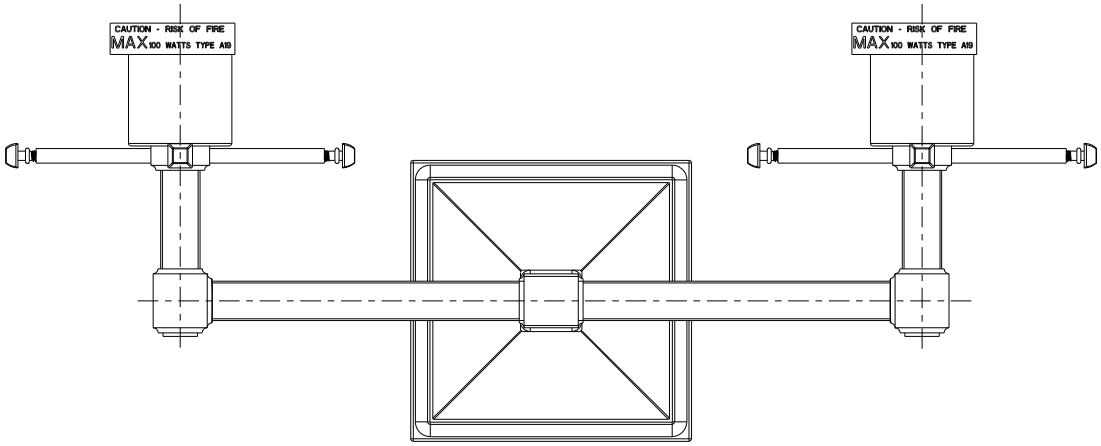

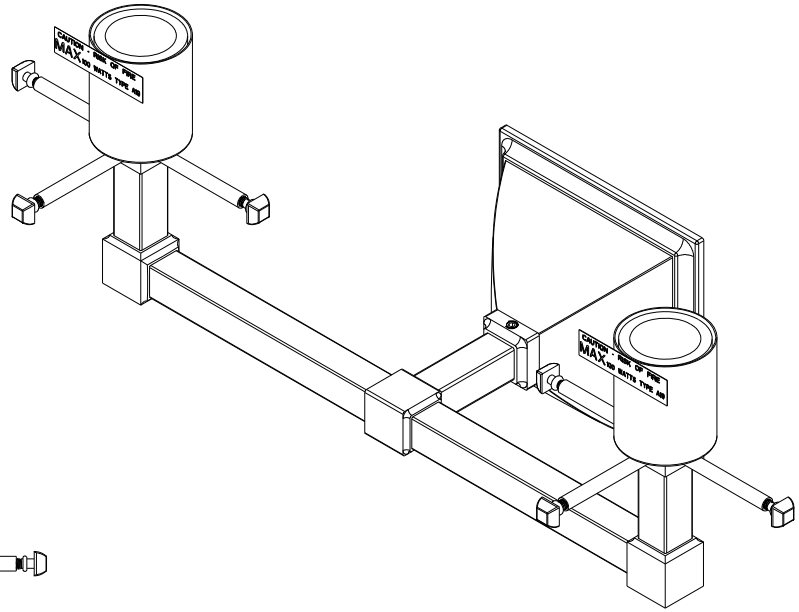

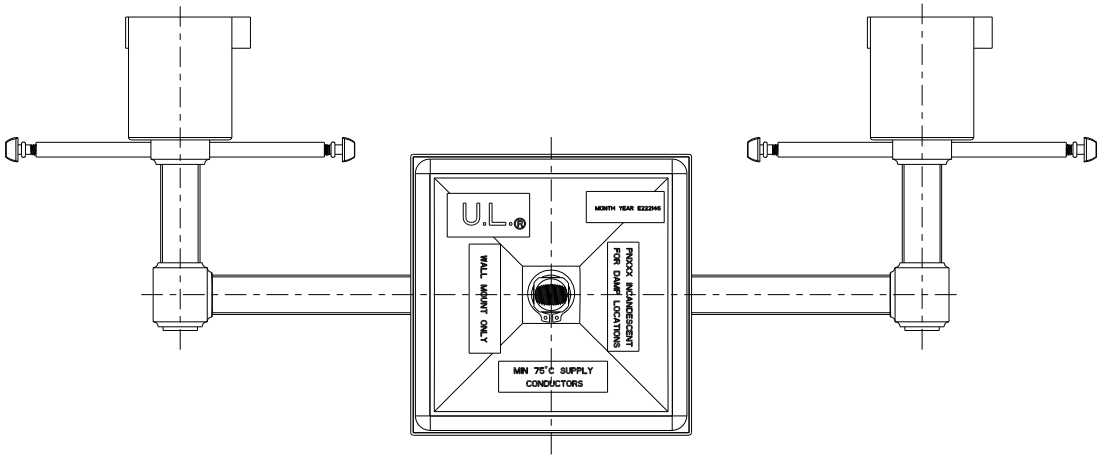

BRASSTECH INCORPORATED

2001 E. CARNEGIE AVE.
SANTA ANA, CA 92705
(949) 417-5207

DWG NO.	REV
1882U	D

SCALE	REF.	SHEET
.325	-	3 OF 3