Medicine Cabinet
Installation and Operating Manual

Model Specification
(type 1)

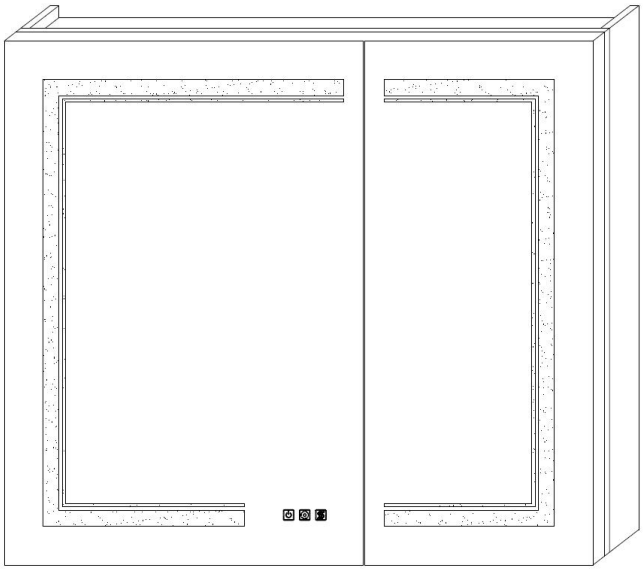

- Aluminum Frame
- Integrated LED
- Three Mirror
- Adjustable Shelves
- Quiet Hinge（170° Opening）
- Recessed or Surface mounting
- Color Temperature:3000-6000K
- Dimming
- Anti Fog
- Built-in 2 outlets and 2 USB connections
- Light-Sensitive Night Light
- Front and Backlit
- Adjustable Magnifying Mirror
- Equipped with GFCI
- Clock & Temperature Display feature available on selected models only.

No.	Dimension	Color	Door Type	Remark
1	24"×32"	Silver	Single door Left or Right	
2	30"×32"	Silver	Double Door	
3	36"×32"	Silver	Double Door	
4	40"×32"	Silver	Double Door	
5	48"×32"	Silver	Triple Door	

Model Specification
(type 2)

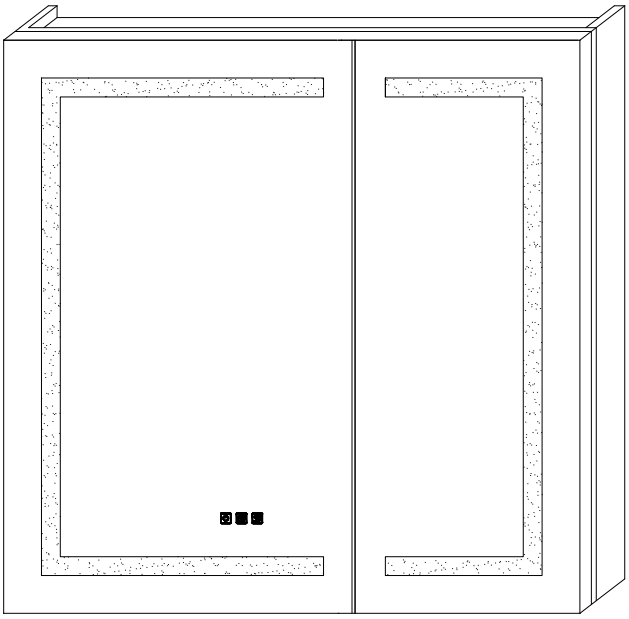

- Aluminum Frame
- Integrated LED
- Three Mirror
- Adjustable Shelves
- Quiet Hinge（170° Opening）
- Recessed or Surface mount
- Color Temperature:3000-6000K
- Dimming
- Anti Fog
- Built-in 2 outlets and 2 USB connections
- Light-Sensitive Night Light
- Front and Backlit
- Adjustable Magnifying Mirror
- Equipped with GFCI
- Clock & Temperature Display feature available on selected models only.

No.	Dimension	Color	Door Type	Remark
1	24"×36"	Silver	Single door Left or Right	
2	30"×36"	Silver	Double Door	
3	36"×36"	Silver	Double Door	
4	42"×36"	Silver	Double Door	
5	48"×36"	Silver	Triple Door	
6	54"×36"	Silver	Triple Door	
7	60"×36"	Silver	Triple Door	
8	66"×36"	Silver	Triple Door	
9	72"×36"	Silver	Triple Door	

Model Specification
(type 3)

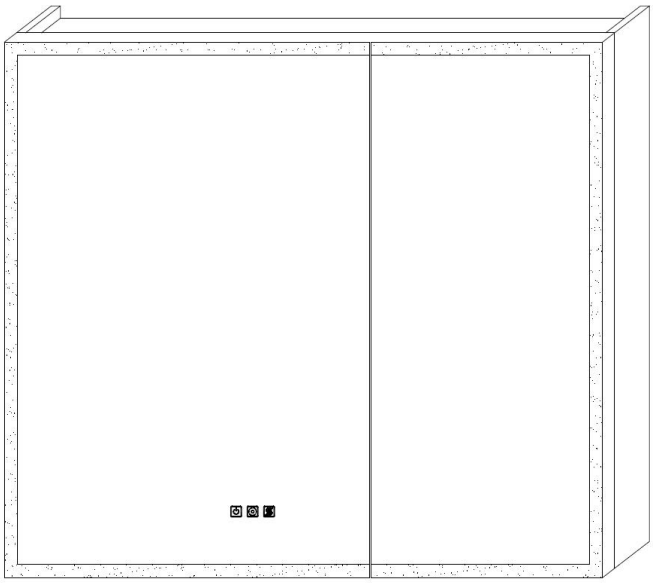

- Aluminum Frame
- Integrated LED
- Five Mirror
- Adjustable Shelves
- Quiet Hinge（170° Opening）
- Recessed or Surface mount
- Color Temperature:3000-6000K
- Dimming
- Anti Fog
- Built-in 2 outlets and 2 USB connections
- Front and Backlit
- Adjustable Magnifying Mirror
- Equipped with GFCI
- Clock & Temperature Display feature available on selected models only.

No.	Dimension	Color	Door Type	Remark
1	20"×32"	Silver	Left Door/Right Door	
2	24"×32"	Silver	Left Door/Right Door	
3	30"×32"	Silver	Double Door	
5	30"×36"	Silver	Double Door	
6	36"×32"	Silver	Double Door	
7	36"×36"	Silver	Double Door	
8	40"×32"	Silver	Double Door	
9	48"×32"	Silver	Triple Door	
10	48"×36"	Silver	Triple Door	
11	60"×36"	Silver	Triple Door	
12	72"×36"	Silver	Triple Door	

Note

For easy and safe installation, please refer to the following:

Read all instructions thoroughly before installing the enclosed product. Read and take note of all **Safety Precautions** , care and maintenance information.

PLEASE KEEP THIS INSTRUCTION MANUAL FOR FUTURE REFERENCE DURING PRODUCT OPERATION AND MAINTENANCE.

WARNING AND SAFETY INSTRUCTIONS

Before installing your LED Medicine Cabinet, please make sure that you carefully read through this instruction sheet, refer back to them during installation to ensure your product is fitted safely and correctly. Keep the instructions for future use.

WARNING Risk of Fire and Electric Shock

●All fittings must be installed in accordance with current IEE wiring regulations. If in doubt, please consult a qualified electrician.

●Turn breaker off the electrical supply at the main circuit board before installation and maintenance.

●Suitable for indoor use only. This product should be positioned well away from curtains and fabrics. Never cover the mirror.

●Regularly check any parts for damage, if any part is damaged the product should not be used.

INSTALLATION SAFETY

●Inspect the product immediately upon receipt for any possible damage during transportation or missing parts. Handle the product with care and protect against knocks to all sides and edges of the glass.

●Ensure there are no hidden pipes or cables in the wall before drilling and sawing.

●Wear suitable safety glasses when drilling. Take care if drilling on tiled surfaces in case the drill slips.

CAUTION

The light source of this product is non-changeable light diodes (LED). Do not disassemble the product, as the light diodes can cause damage to the eyes.

NOTE:The important safeguards and instructions that appear in this manual are not meant to cover all possible conditions and situations that may occur. It must be understood that common sense, caution and care are factors that can't be built into any product. These factors must be supplied by the person(s) caring for and operating the fixture. Do not install this fixture in hazardous locations.

PARTS SUPPLIED

Z- Mounting Bar

×1

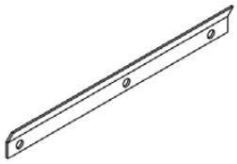

Z-Supporting Hook

×2

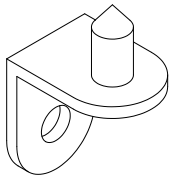

Side Mirror

×2

Shelves Support

×4~8

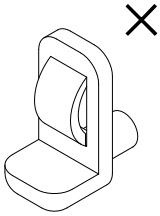

Wire Cap

×3

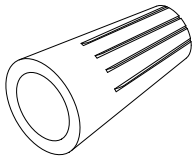

Anchors A

×2

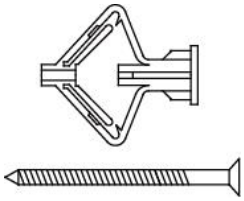

Anchors B

×6~14

Anchor B &Z-Hook Screws

×6~14

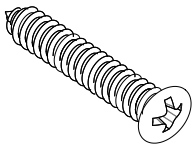

Side Panel Screws

×8

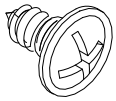

Shelves

×2~9

TOOLS REQUIRED

Drill

Pencil

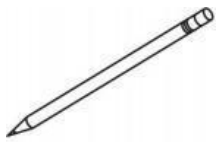

Level

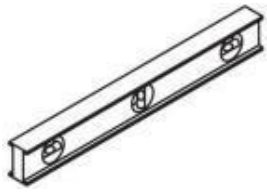

Tape

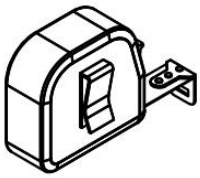

Gloves

Safety Glasses

Phillip Screw Driver

Drill Bit 8mm(5/16”)

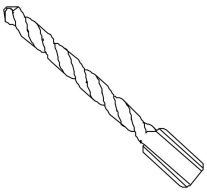

Hammer

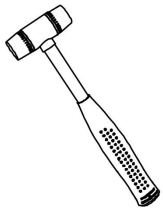

Installation Instruction

The medicine cabinet supports two installation methods: 1.Surface Installation and 2.Embedded Installation.

Please choose the installation way that best suits you.

Some cabinet doors will be packed uninstalled but inside the cabinet to reduce packaging volume. Please install the cabinet door after completing the cabinet installation according to the instructions.

The installation instructions for the cabinet door is at the end of the installation instructions.

Please remove the doors before installing the Medicine Cabinet. This will make the installation easier, more convenient and safer. Certainly, depending on the size, you can proceed with the installation directly, just be careful during installation to avoid any door collisions.

1. First, disconnect the wires from the cabinet.

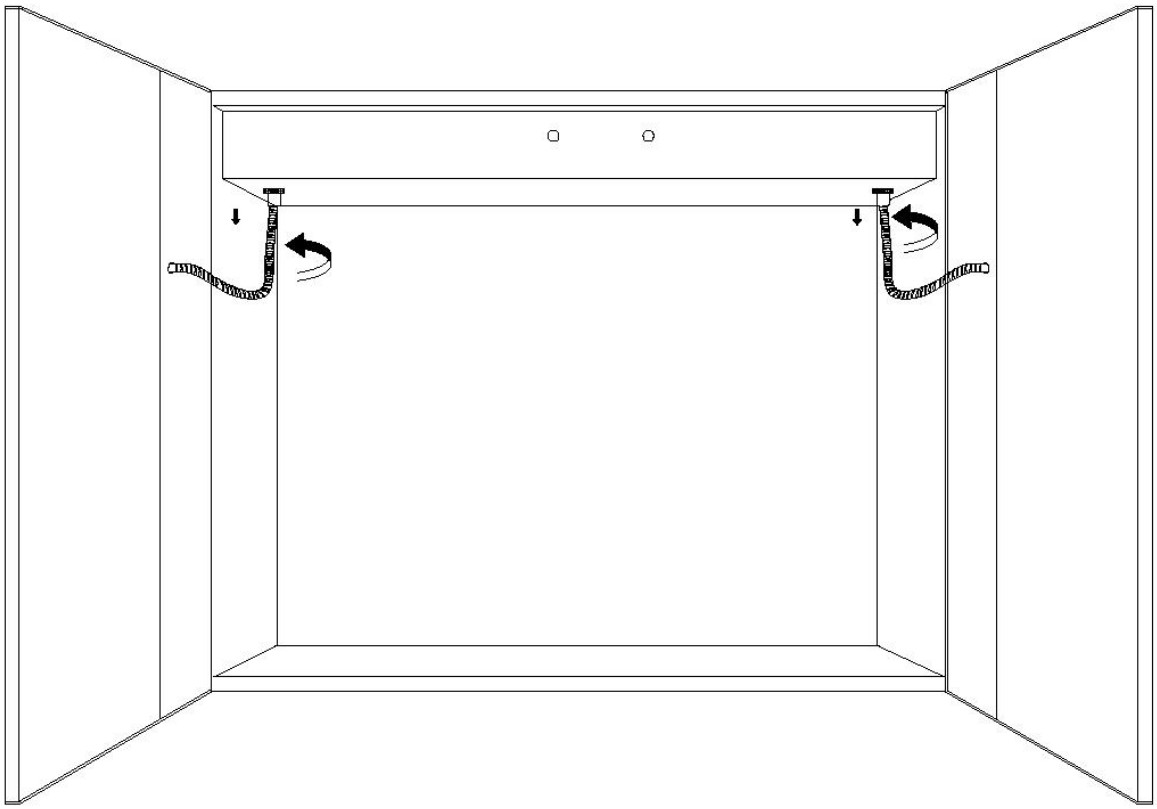

2. Turn the adjustment screw in the picture clockwise to the end to prevent the hinge from disassembling and hitting the cabinet.

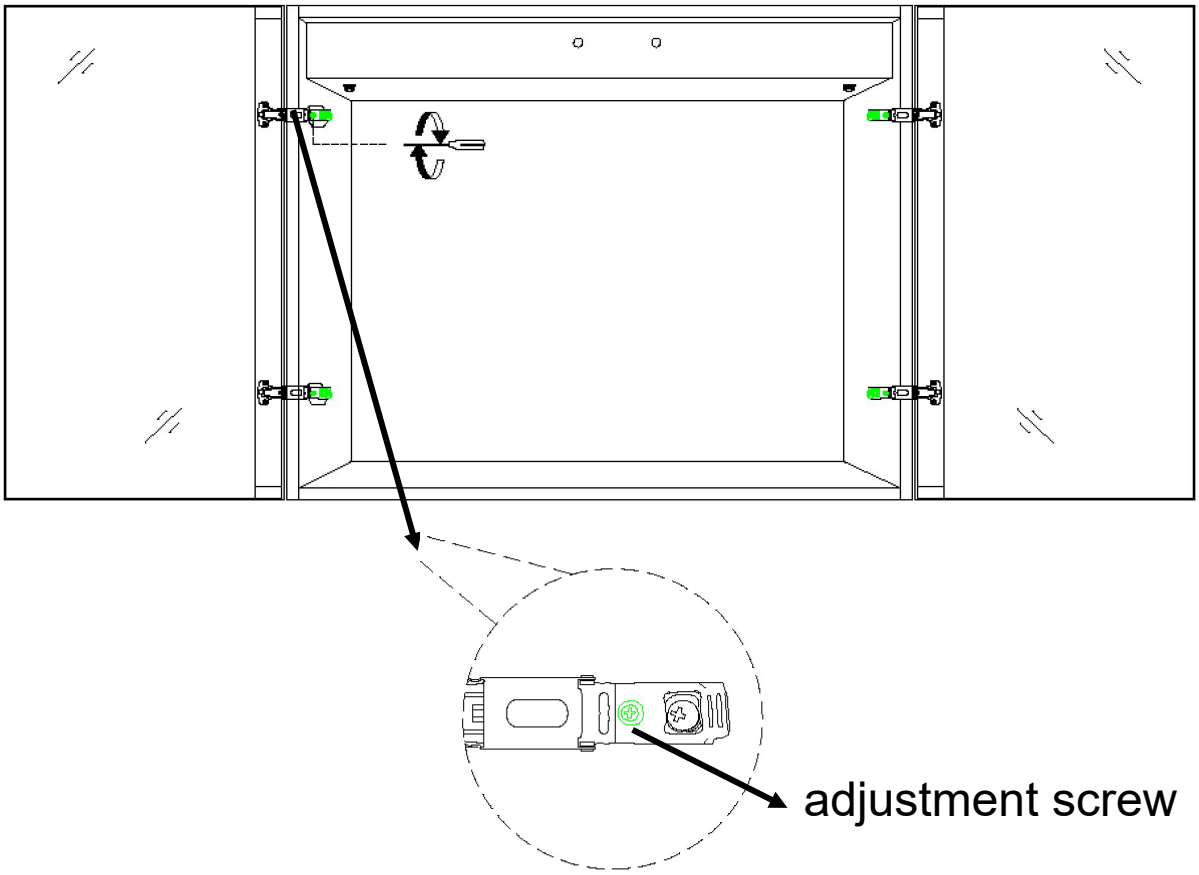

3. Then, press the end of the hinges and detach the cabinet door.

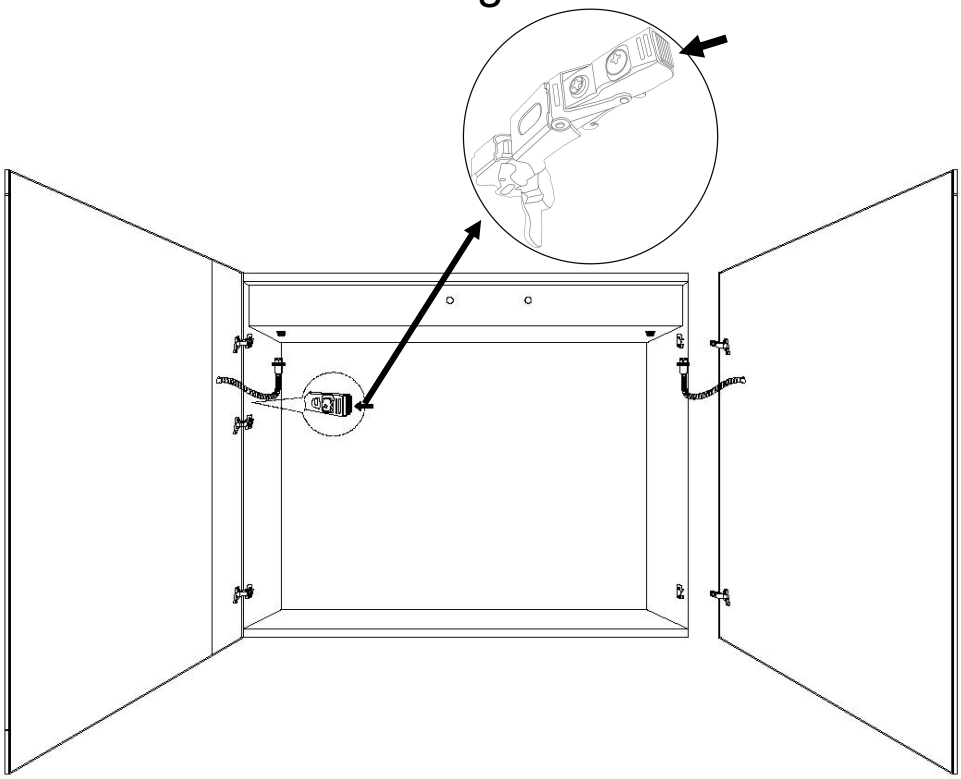

Surface Installation Instruction

Verify minimum clearances

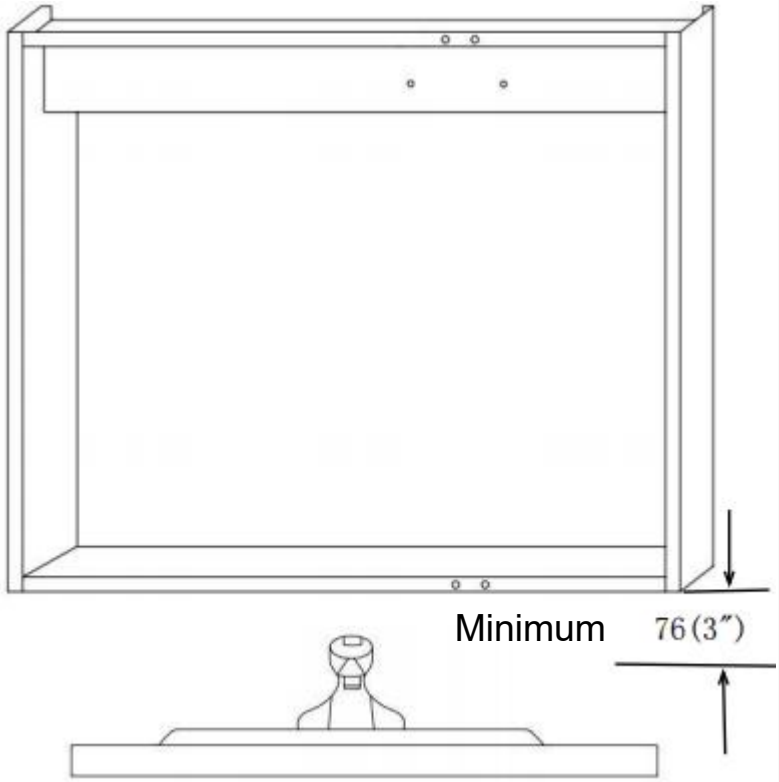

STEP 1

H is the total height of the medicine cabinet, and W is the total width of the medicine cabinet

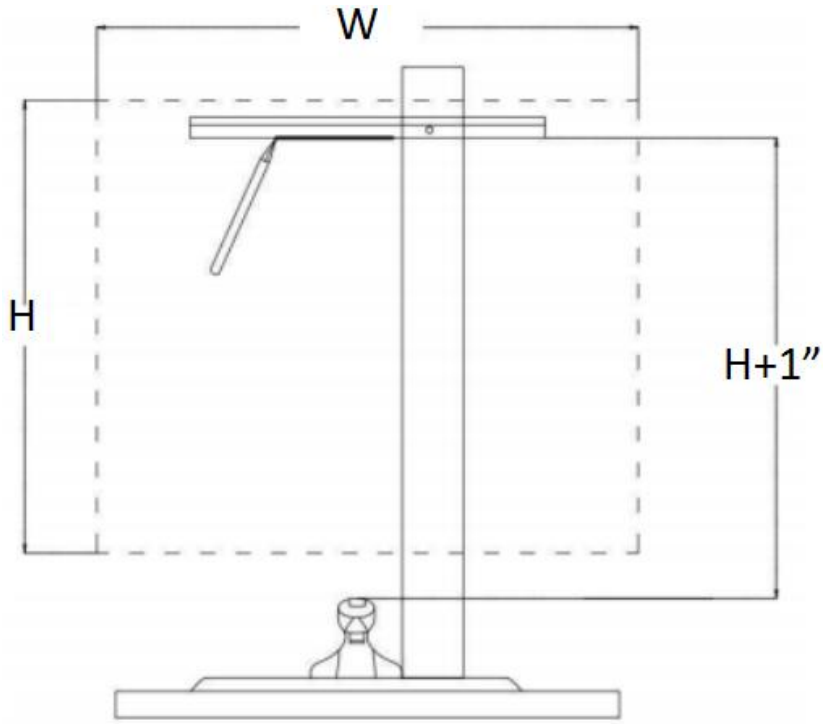

STEP 2

Surface Installation Instruction

A) Mark holes locations on the wall.All markings must be properly leveled.
B) Drill holes and insert anchor where needed.

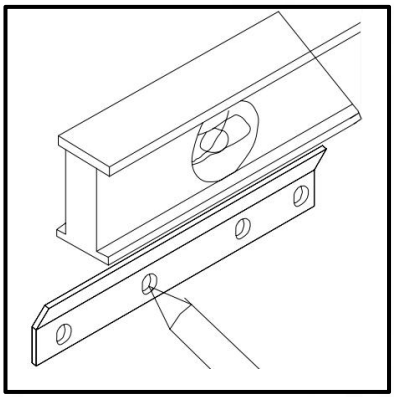

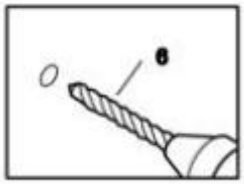

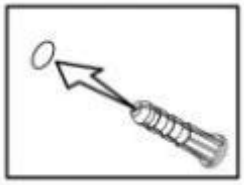

STEP 3

Secure the bar with Flat head screws

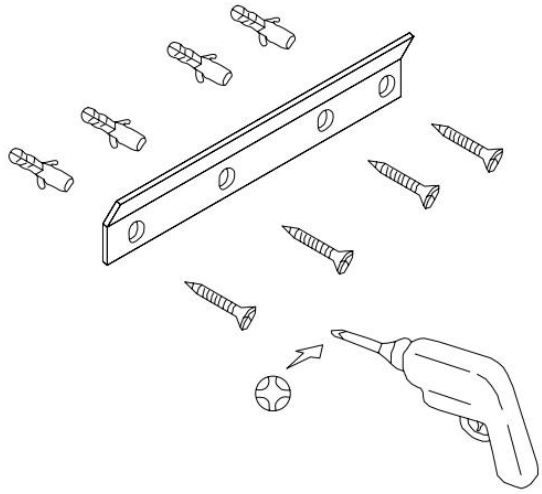

STEP 4

Side Mirror Installation

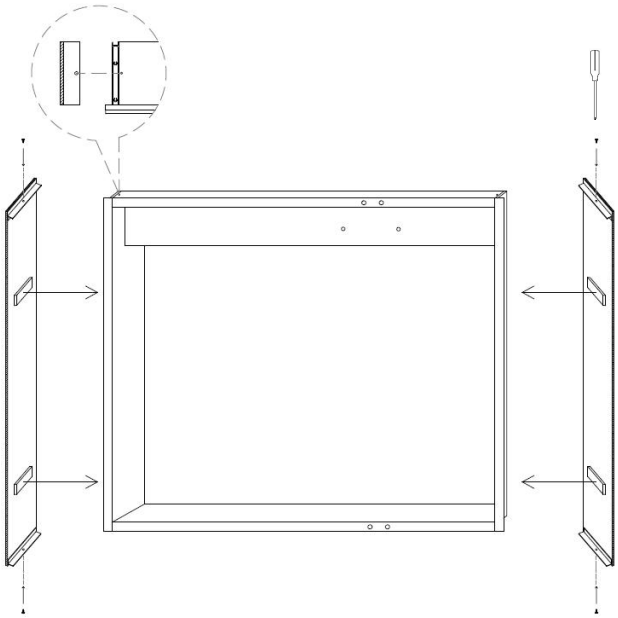

STEP 5

Connect the wires

BLACK WIRE --- POWER SUPPLY L (LINE)
WHITE WIRE --- POWER SUPPLY N (NEUTRAL)
GREEN WIRE --- POWER SUPPLY G (GROUND)

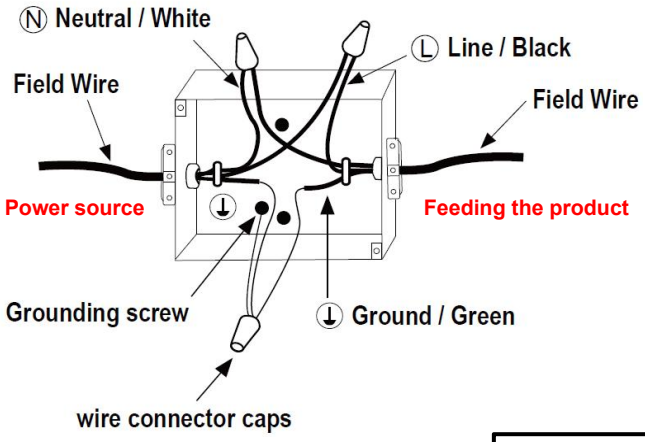

STEP 6

The side panels and cabinets are individually packaged ,
you need follow the STEP 5 to install the side panels for surface mounting, for embedded installation no need to install the side boards.

Surface Installation Instruction

Lift the cabinet and slide it down over the mounting bar.
Make sure the hooks engage the bar.

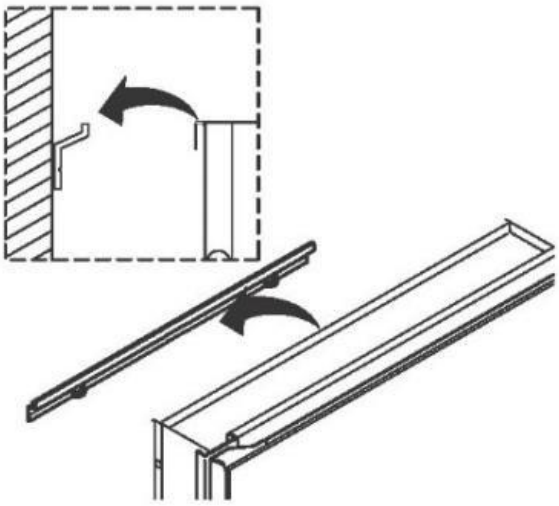

STEP 7

Place the support angle on the bottom of the cabinet and mark hole location on the wall. Drill hole and insert anchor where needed. Fix the support angle by screw. Always look for wood studs behind the drywall for stronger installation.

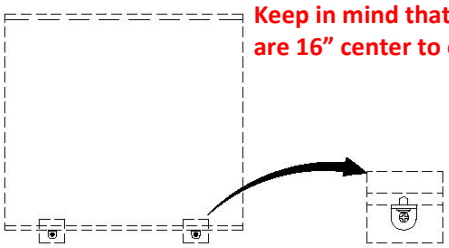

For instructions on using anchors, please refer to the next page.

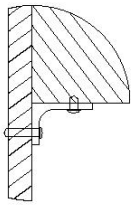

STEP 8

To prevent the cabinet from tipping over, Z-Supporting Hook must be installed！ Each cabinet requires the installation of two.

Surface Installation Instruction

Rules for Selecting Anchors

Anchors A

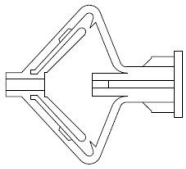

Installing on Drywall:

- Use Anchors A to ensure a secure installation on drywall.
- Anchors A are designed to provide adequate support on drywall.

Anchors B

Installing on concrete wall:

- Use Anchors B for a stronger installation.
- Anchors B are specifically designed for concrete wall, offering higher fastening strength.

STEP 8

Install the glass shelves by mounting them over the shelves supports.

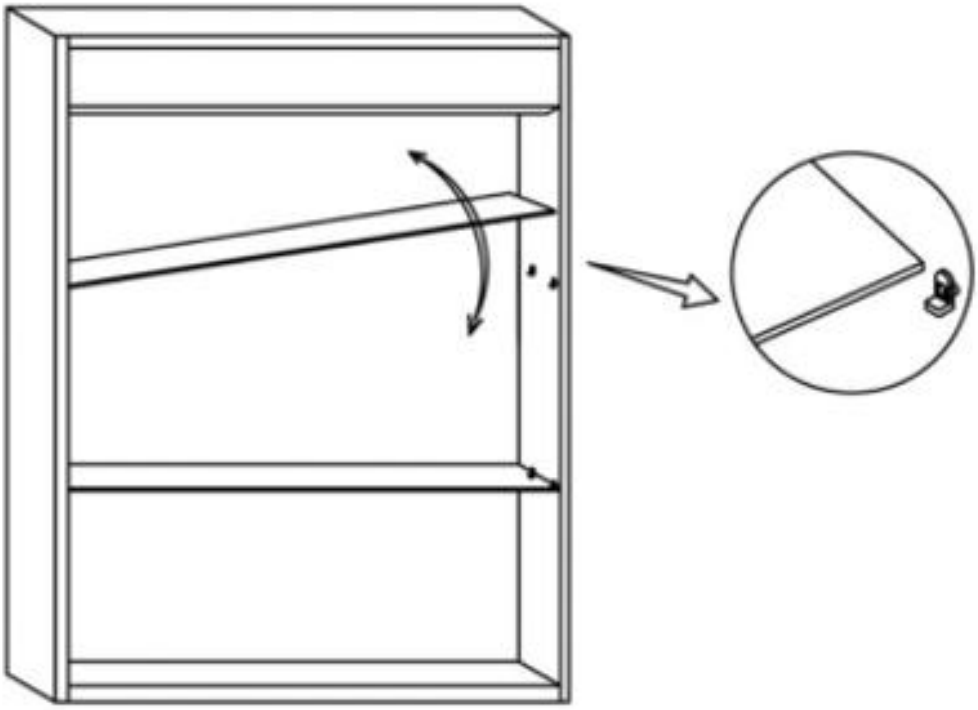

STEP 9

Step10：Cabinet Door Installation

1.Please ensure that the latch on the hinge is fully extended. This can be achieved by rotating the adjusting screw clockwise near the latch, which will make it easier to install the cabinet door.

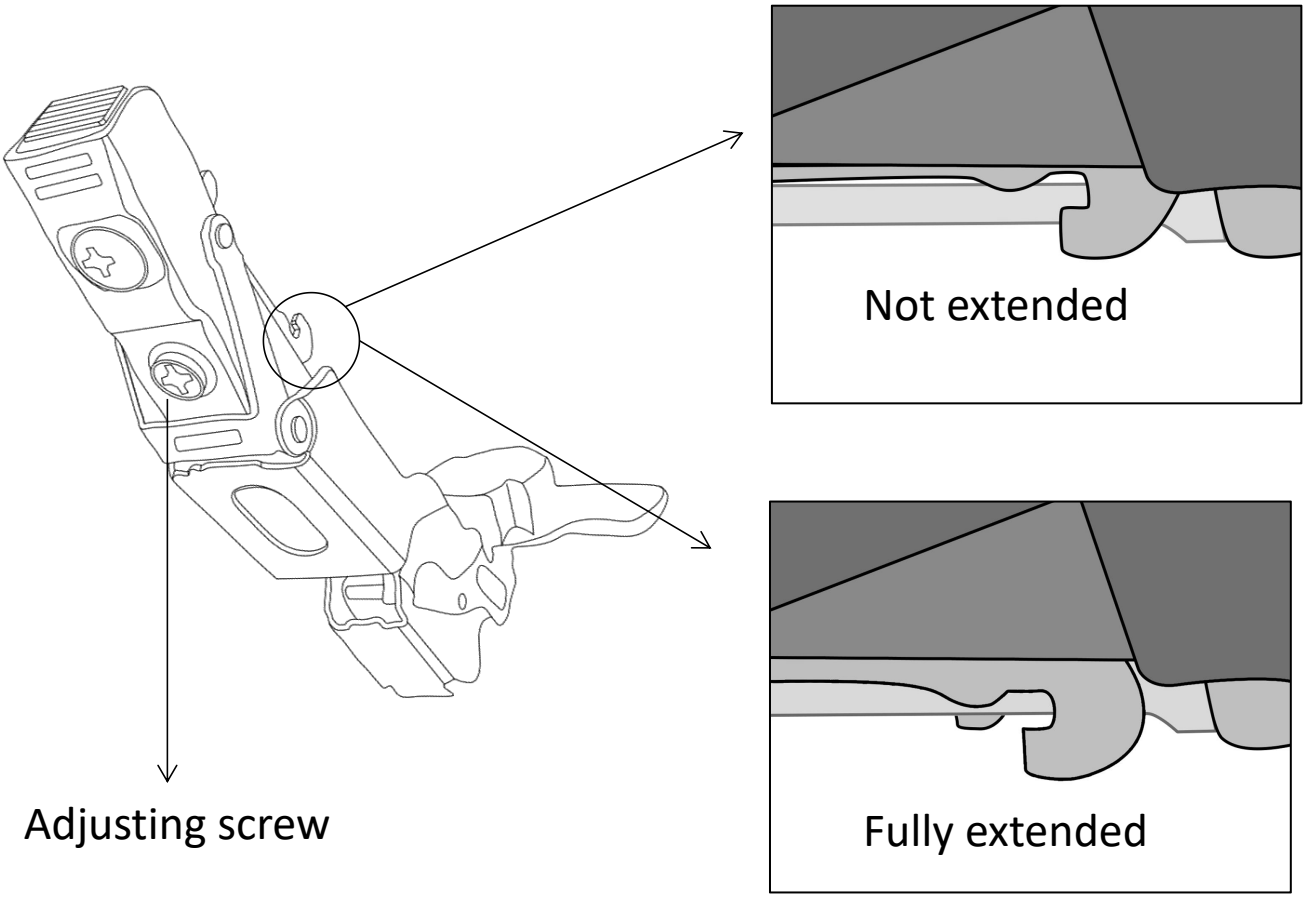

2.Insert the hinges to the base ,then connect the doors with the cabinet.

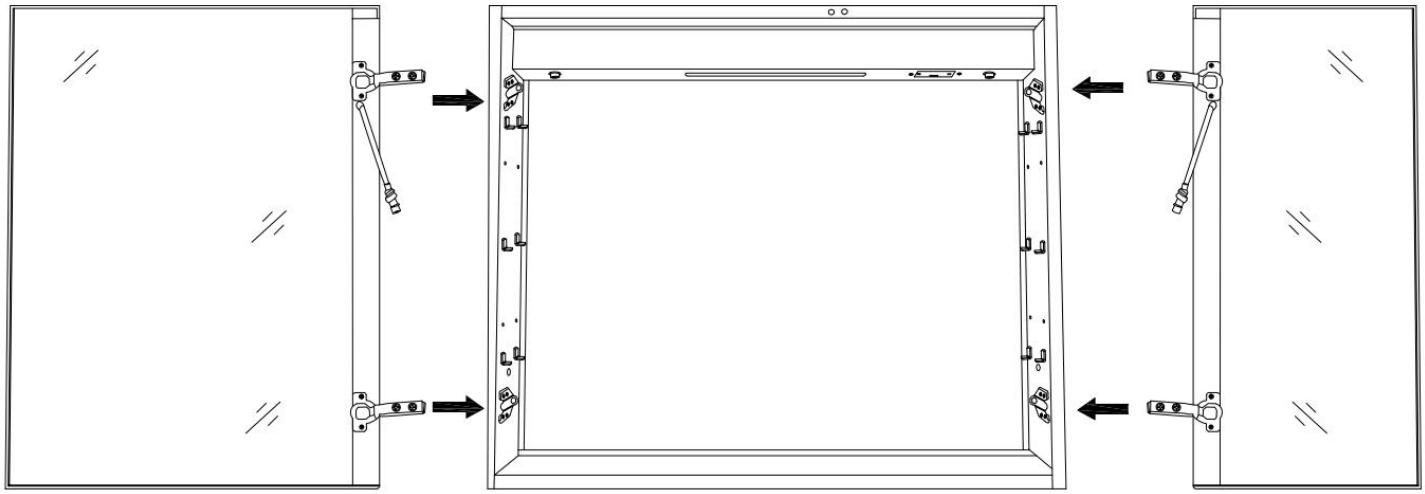

3.If necessary , adjust corresponding screws on the hinge to align the doors, ensure that gaps are even and the doors open and close smoothly.

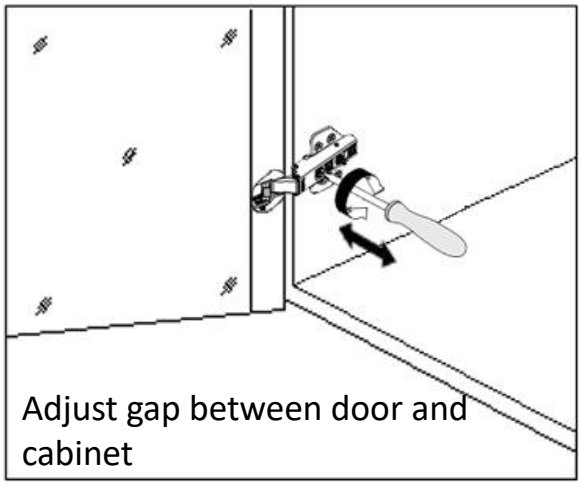

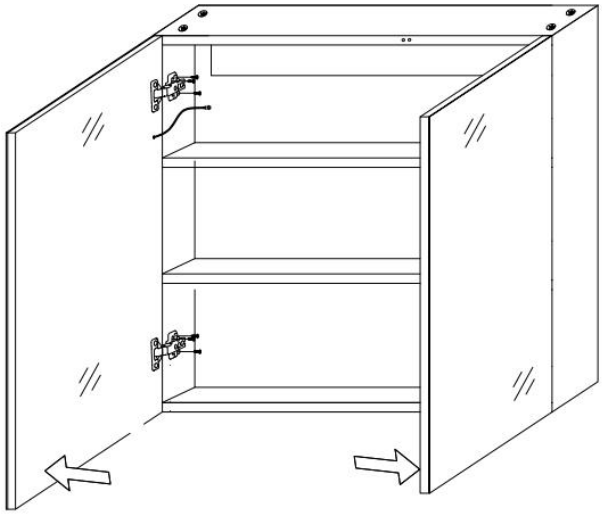

4. Connect the electrical cord on the door to the cabinet and tighten it properly.

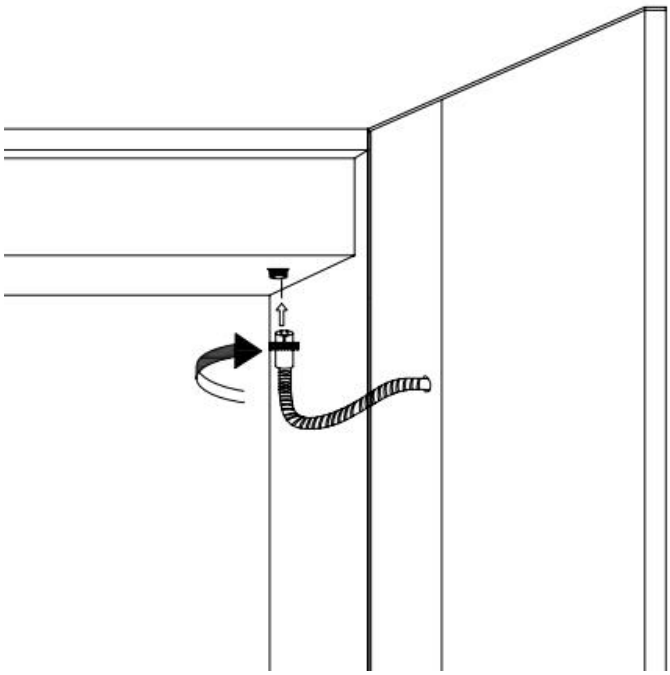

Embedded Installation Instructions

Before installing, it is necessary to determine the opening size, which can be referred to in the table below.

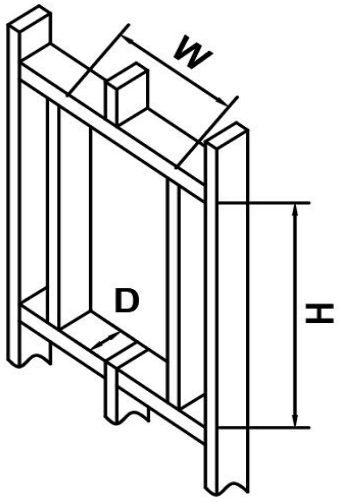

Actual cabinet		Wall opening dimensions for embedded installation all in Inches.		
No.	Dimensions	W（Width）	H（Height）	D（Depth）
1	20"×32"	19-1/4	31-1/4	4
2	24"×32"	23-1/4	31-1/4	4
3	24"×36"	23-1/4	35-1/4	4
4	30"×32"	29-1/4	31-1/4	4
5	30"×36"	29-1/4	35-1/4	4
6	36"×32"	35-1/4	31-1/4	4
7	36"×36"	35-1/4	35-1/4	4
8	40"×32"	39-1/4	31-1/4	4
9	42"×36"	41-1/4	35-1/4	4
10	48"×32"	47-1/4	31-1/4	4
11	48"×36"	47-1/4	35-1/4	4
12	54"×36"	53-1/4	35-1/4	4
13	60"×36"	59-1/4	35-1/4	4
14	66"×36"	65-1/4	35-1/4	4
15	72"×36"	71-1/4	35-1/4	4

Embedded Installation Instruction

Determine the size of the opening

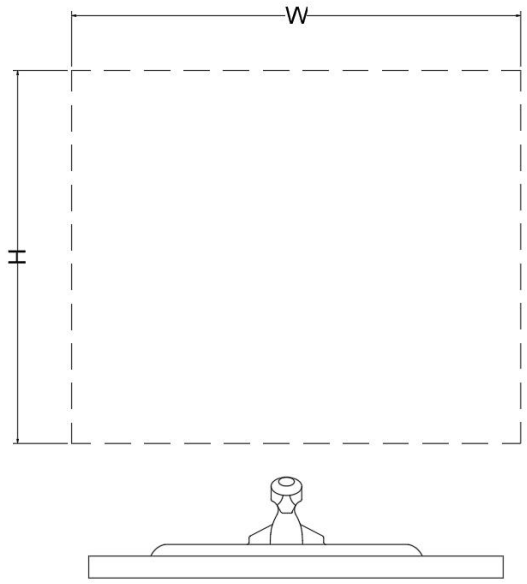

STEP 1

Connect the wires

BLACK WIRE --- POWER SUPPLY L (LINE)
WHITE WIRE --- POWER SUPPLY N (NEUTRAL)
GREEN WIRE --- POWER SUPPLY G (GROUND)

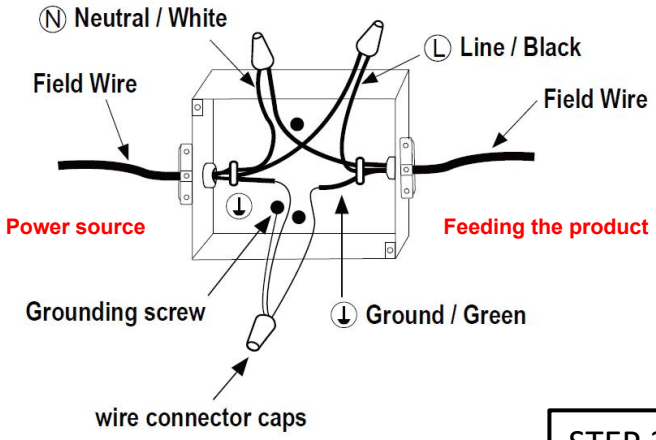

STEP 2

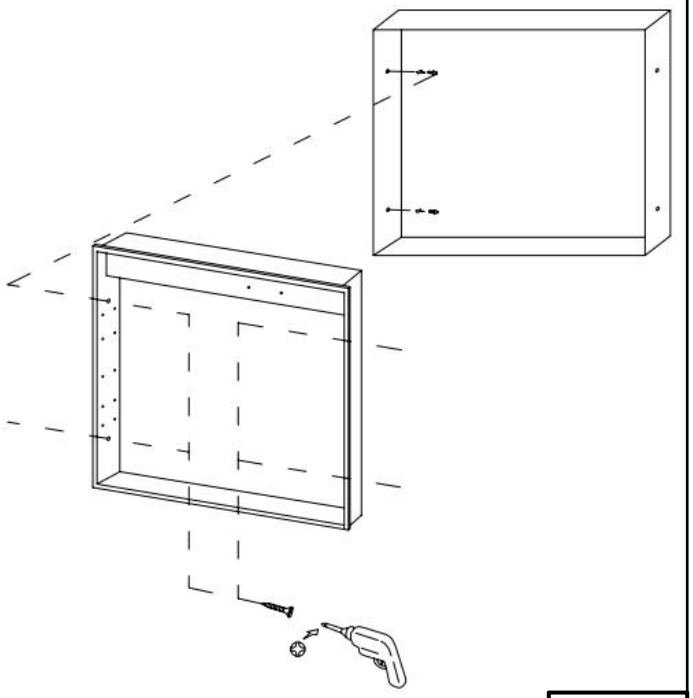

STEP 3

Install the glass shelves by mounting them over the shelves supports.

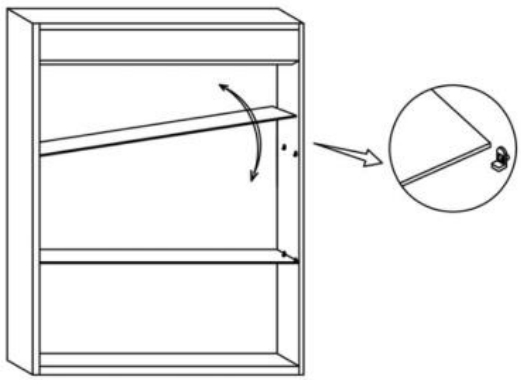

STEP 4

*All diagrams are for reference only.All model dimensions and proportion position will vary.

Step 5：Cabinet Door Installation

1.Please ensure that the latch on the hinge is fully extended. This can be achieved by rotating the adjusting screw clockwise near the latch, which will make it easier to install the cabinet door.

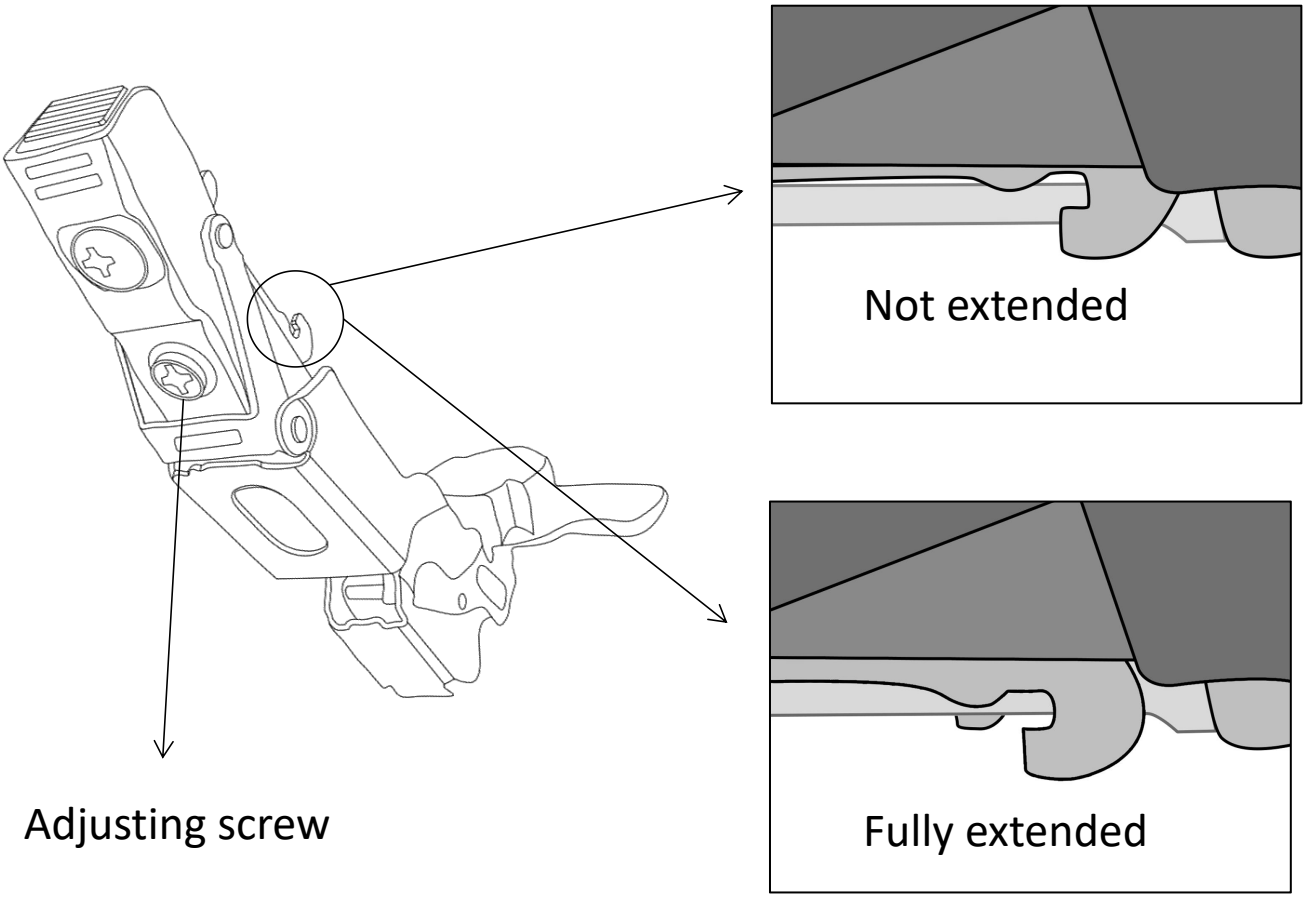

2.Insert the hinges to the base ,then connect the doors with the cabinet.

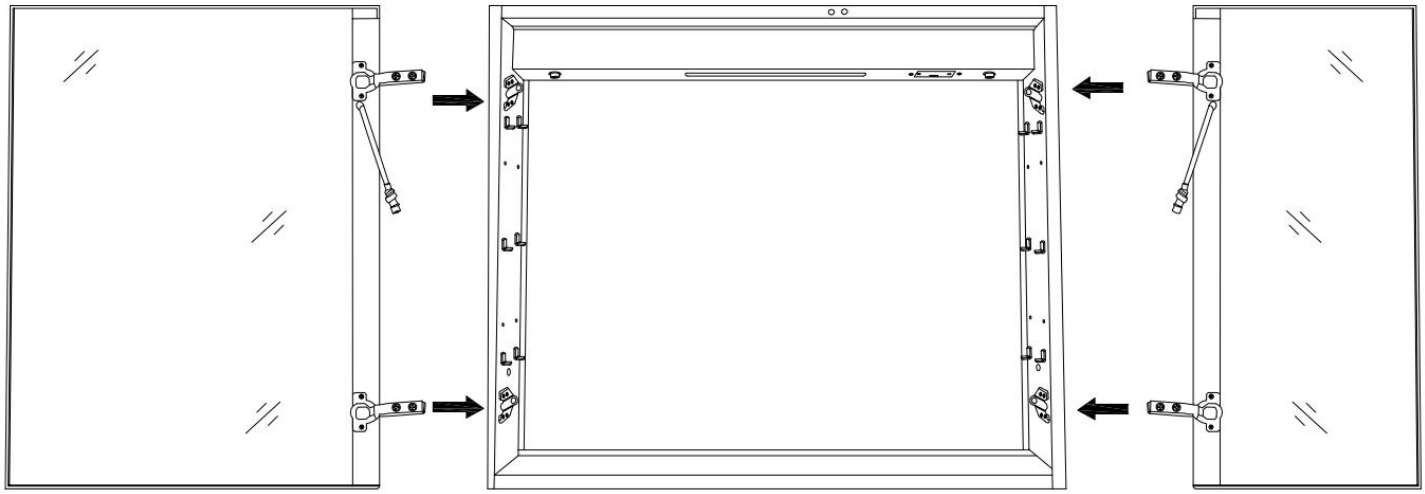

Step 5：Cabinet Door Installation

3.If necessary , adjust corresponding screws on the hinge to align the doors, ensure that gaps are even and the doors open and close smoothly.

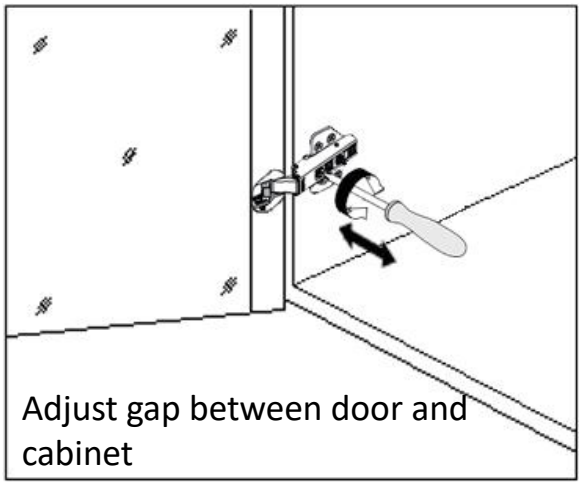

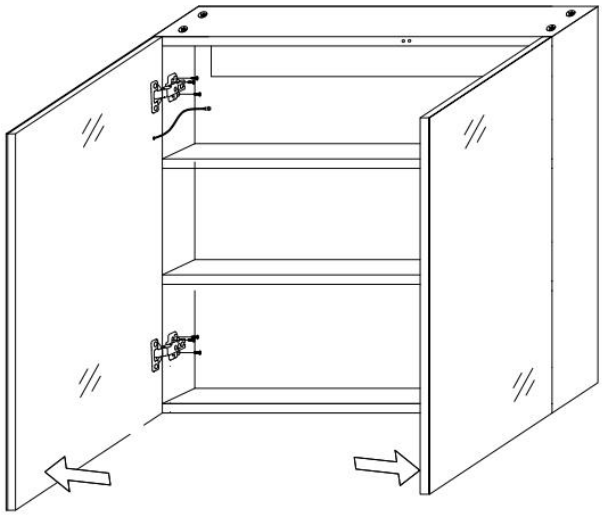

4. Connect the electrical cord on the door to the cabinet and tighten it properly.

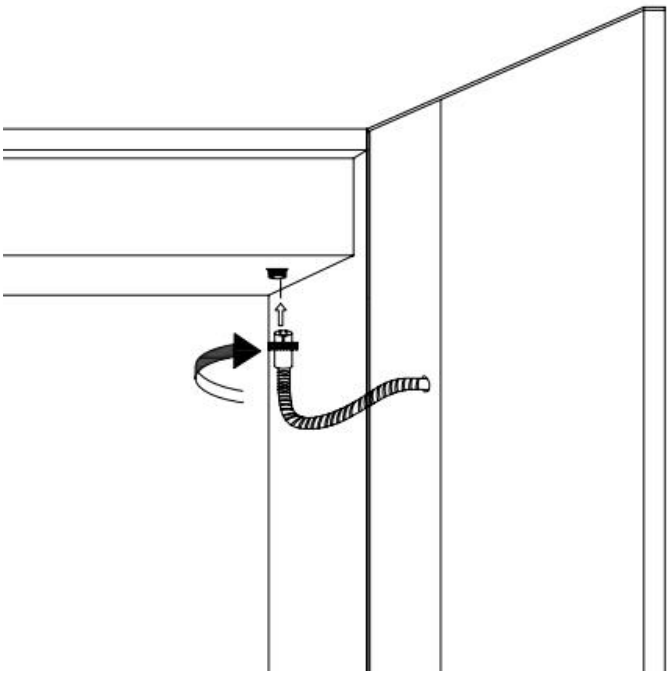

Operating Manual

● Setting the light & Defogger

The buttons turn blue when connected to the main power supply and turn white after a brief touch. Optional to be wired to wall switch by ON/OFF memory function.

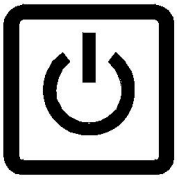

- **Briefly touch the button to control on/off the light and illumination modes.**
- **The first touch is to turn on all the lights, the second touch is to turn on only the front light, the third touch is to turn on only the back light, and the touch again turn off all the lights, and so on.**
- **Press and hold the button to adjust the brightness when the mirror is on.**
- **If there is no operation within 15 seconds, touching this button will directly turn off the lights.**

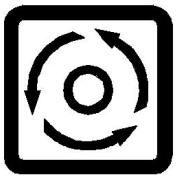

- **Briefly touch the button to change the color temperature among the 3000K,4200K and 6000K when the light is on.**
- **Press and hold the button to change the color temperature steplessly .**

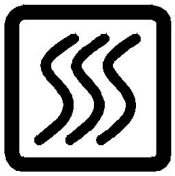

- **The mirror begins to warm up and defog after you press the defogger button.**
- **Press the button again to turn off the anti-fog function.**
- **Press and hold the button to turn the blue backlight on or off.**
- **Note: To prevent damage from prolonged high temperatures, the defogger will automatically stop after 60 minutes of continuous operation.**

● Electrical components inside the cabinet

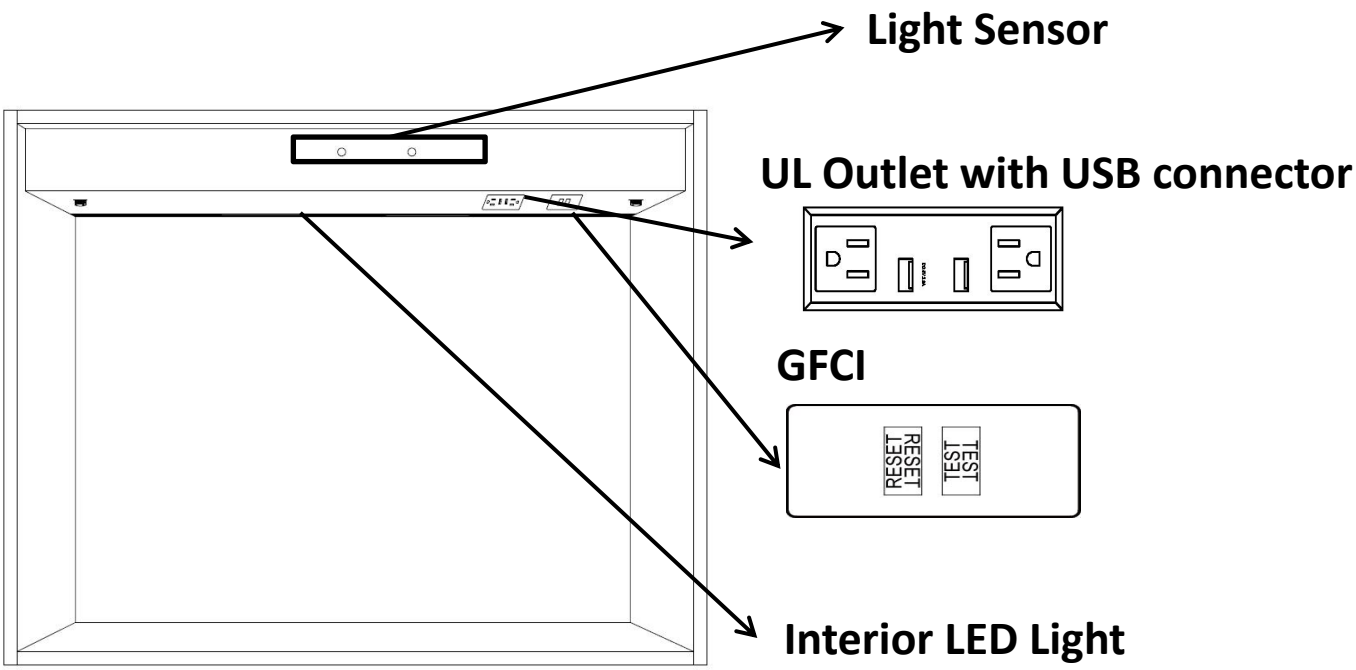

1. Interior LED Light

- **The Interior LED Light will be automatically on when the cabinet door opened.**
- **Don't cover the light sensor.**

2. GFCI

- **GFCI is to protect you from severe electrical shocks.**
- **Press the TEST button should turn off the power to the circuit, causing the RESET button to pop up. (Remember to push the RESET button to re-establish power and protection).**
- **Please press the TEST button (then RESET button) every month to assure proper operation.**

3. UL Outlet with USB connector

- **Outlet: Rated for a maximum of 15A, 1800W, 120Vac**
- **USB connector: Rated for a maximum of 3.6A, 18W, 5Vdc**

Magnifying Mirror

- **The magnifying mirror can be placed anywhere within the illuminated area on the inside mirror of the door, allowing you to adjust its position according to your preferences.**

- **The lighting of the magnifying mirror is synchronized with the lighting of the medicine cabinet in terms of brightness and color temperature, and it can be adjusted through the touch switch on the door.**

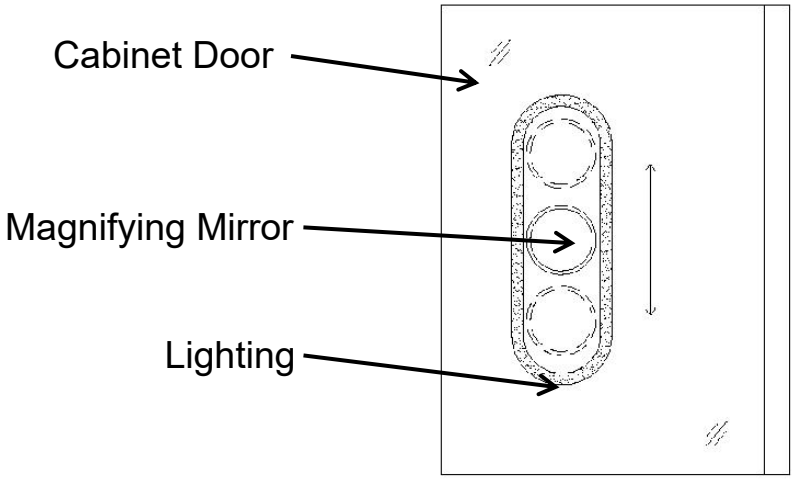

Light-Sensitive Night Light

Note: Some models of this series do not include a light-sensitive night light.

The top view of cabinet door

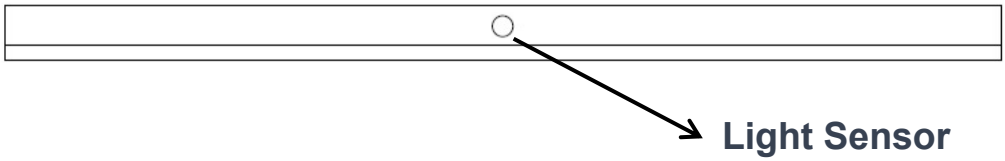

The bottom-up view of cabinet door

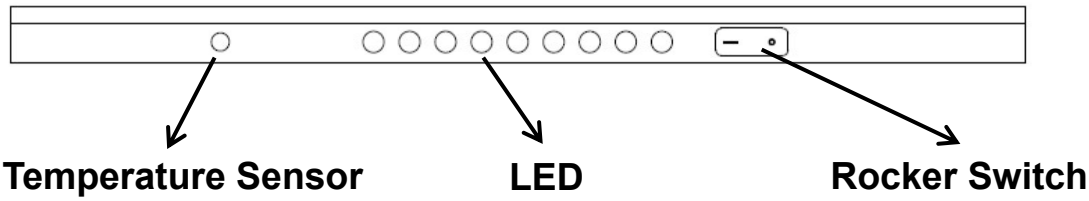

- When the ambient brightness decreases, the night light will turn on.
- The rocker switch allows you to toggle the night light function on or off.
- Don’t cover the sensor.

● Setting the clock

Note: Some models of this series do not include a clock function.

- **First, Briefly touch the button to make sure the button blue light is on.**
- **Press and hold the Button for a few seconds, the "Hour" will start flashing, then briefly touch button to set Hour.**
- **Wait for a few seconds after setting up the Hour then it will automatically switchto the Minute adjustment mode.**
- **Briefly touch Button to set up the Minute.**
- **Wait a few seconds after you finish the time setting, the time will be saved automatically.**

To turn on/off the clock:

- **First, Briefly touch the button to make sure the button light is off（No Blue Light）.**
- **Then, press and hold the button for a few seconds until the clock turns on/off.**