Audo

CO DINING CHAIR
Designed by *Norm Architects*

DESCRIPTION

The Co Dining Chair is available in both un-upholstered and upholstered versions, with the option of an upholstered seat in a range of textiles and leathers. Offered with or without armrests, the base comes in black or chromed steel, and the chair is available in three finishes: natural oak, dark stained oak, and black oak. The design allows for stacking and row-connecting.

SKU	71145-004509
EAN	5709262074624
ADD ARMS?	True
ARMS MATERIAL	Oak, Veneer, Dark Stained
BACKREST MATERIAL	Oak, Veneer, Dark Stained
BASE MATERIAL	Steel, Black
BASE TYPE	4-Legs Base
FOAM TYPE	Global / US - CAL117
PRICE CATEGORY	PC0T
UPHOLSTERY	AUDO BOUCLÉ
UPHOLSTERY COLOUR	02
UPHOLSTERY TYPE	Seat Upholstered
DESIGNER	Norm Architects
PRODUCT TYPE	Dining Chair
ENVIRONMENT	Indoor
TEXTILE LEATHER CONSUMPTION	Textile Consumption: 0.645 yds Leather Consumption: 5.1667 ft2
DECLARE LABEL	Download

COUNTRY OF ORIGIN	Latvia
MATERIALS	Plywood, Foam, Upholstery, Oak Veneer, Powder Coated Steel
TESTS & CERTIFICATIONS	ANSI: BIFMA X5.4-2020 EN16139:2013, L2
CO2e	For any inquiries, please contact your local Sales representative
2D FILES	Download
3D FILES	Download
REVIT FILES	Download
WARRANTY	10 years (Download)
CARE INSTRUCTIONS	Arms Material Backrest Material Base Material Upholstery

Audo

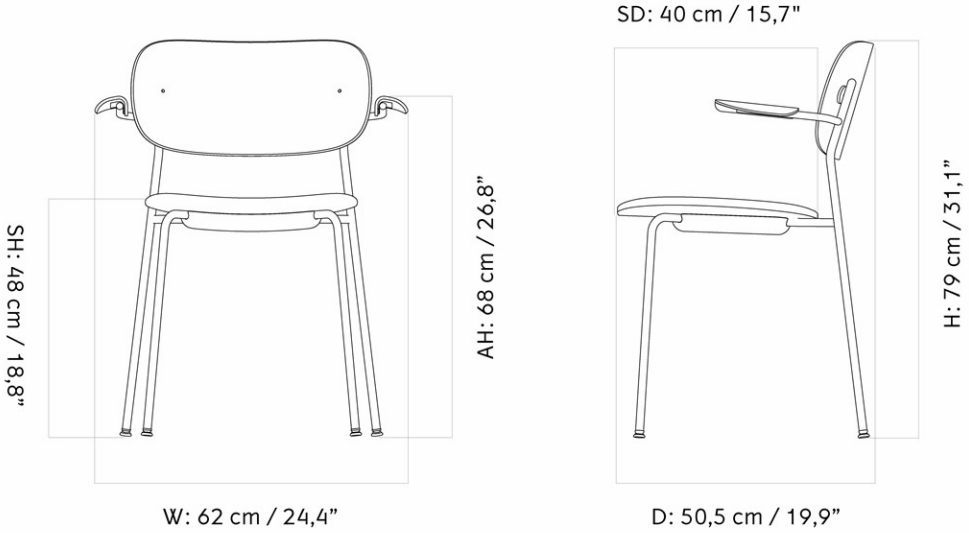

CO DINING CHAIR
Designed by *Norm Architects*

TECHNICAL SPECIFICATIONS

DIMENSIONS	Arm Height: 26.77 " Seat Height: 18.90 " Seat Depth: 15.75 " Product Height: 31.10 " Product Width: 24.41 " Product Depth: 19.88 "
NET WEIGHT	13.316 Lb
GROSS WEIGHT	18.942 Lb
PACKAGING TYPE	Brown Box
PACKAGING MEASUREMENTS	H x W x D 31.50 " x 20.87 " x 19.29 "
PRODUCTION PROCESS	The seat, backrest, and armrests are made from curved plywood, with the shell CNC-milled on a 5-axis machine. The core is beech veneer, finished with an outer layer of oak veneer. Upholstered options are available, including full wood, seat upholstery, and fully upholstered versions, with double-layer foam used on the seat for added comfort. The base is made from bent, welded steel tubes, with armrests crafted from steel rods. The base comes in either a powder-coated or chrome finish.

Audo

CO DINING CHAIR
Designed by *Norm Architects*

SPARE PARTS Find relevant spare parts for this product to support long-term maintenance.

SPARE PARTS	VARIANT	SPARE PART SKU
	Harbour & Co Chair, Steel Base-Versions, Quick Click Glides, 2x4 pcs.	81111000599
	Co Chair, Screw For Un-Upholstered Backrest, Black	81111000442
	Row Connection For Co Chair With Armrest	81111000814
	Co Chair, Set Of Armrests For Steel Base, Dark Stained Oak	81111000397
	Co Chair Insert w/Plastic Glide, Black, 4 pcs.	81111000603