## ASSEMBLY INSTRUCTIONS

CAUTION

- Inspect the wire insulation for any cuts, abrasions, or exposed copper that may have resulted during shipping. If there is a defect in the wire, do not attempt installation.
- Before starting installation of this fixture or removal of a previous fixture, disconnect the power by turning off the circuit breaker of by removing the fuse at the fuse box.

## TOOLS REQUIRED



**Ladder**



**Safety glasses**



**Phillips screwdriver**

## HARDWARE INCLIDED

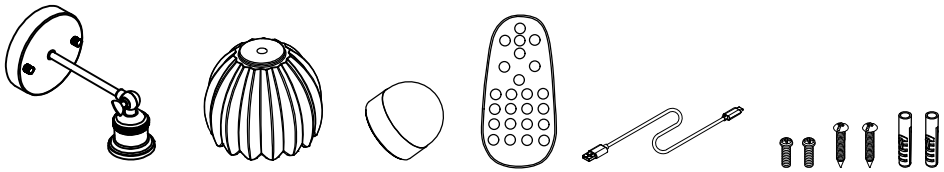

**PARTS SHOWN MAY DIFFER SLIGHTLY PER LIGHT FIXTURE**

MOUNTING OPTION for using attached bulb that comes with the product.

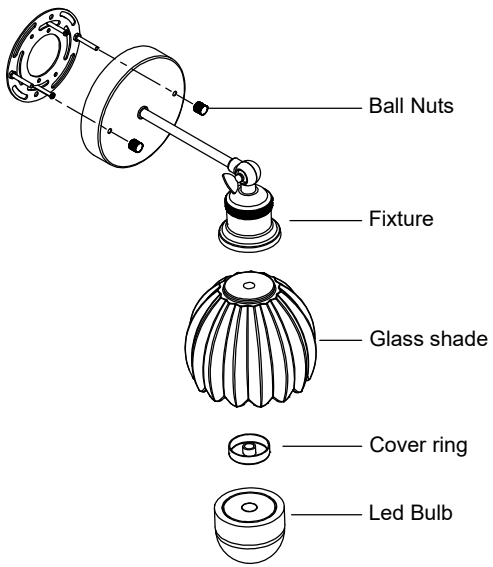


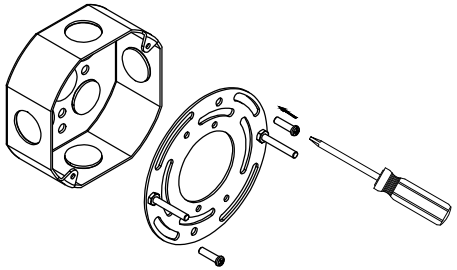

MOUNTING OPTION 1

(With junction box)

STEP 1a

Unscrew the ball nuts from the mounting unit.
Use the mounting screws to attach the mounting unit to the junction box (not included).

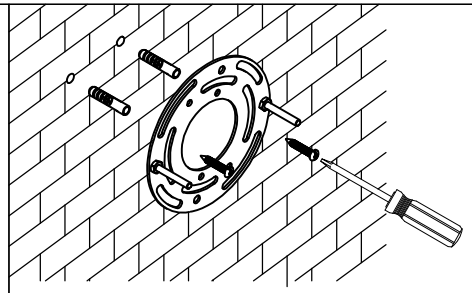

MOUNTING OPTION 2

(No junction box)

STEP 1b

If there is no junction box, you can also install the wall lamp directly by fixing the mounting plate on the wall.

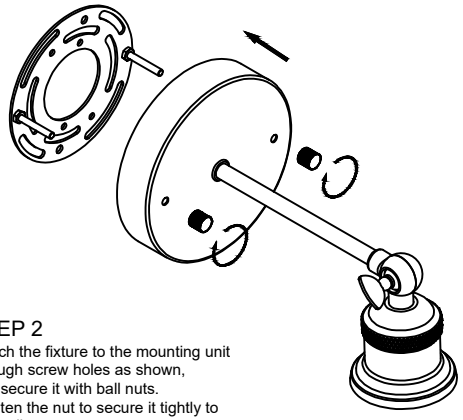

STEP 2

Attach the fixture to the mounting unit through screw holes as shown, and secure it with ball nuts.
Tighten the nut to secure it tightly to the wall.

STEP 3

Remove the socket ring from the fixture.
attach the glass shade onto fixture by Cover ring.

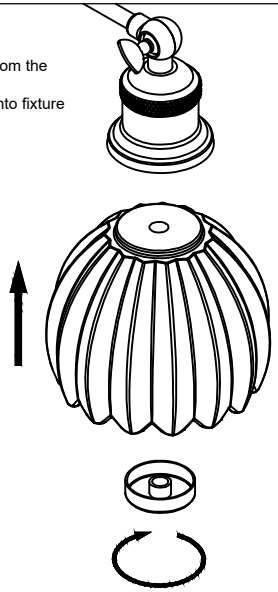

STEP 4

Install RGB bulb.

