belldinni
interior doors

Belldinni DIY Friendly

Ready to be installed like a pre-hung door kit with Easy Installation kit

QR code to have EZ installation instructions on your phone

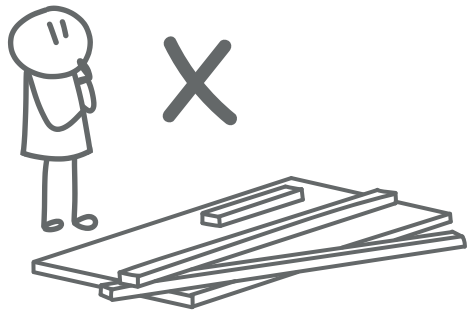

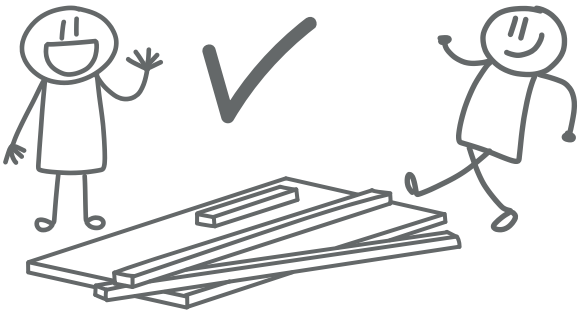

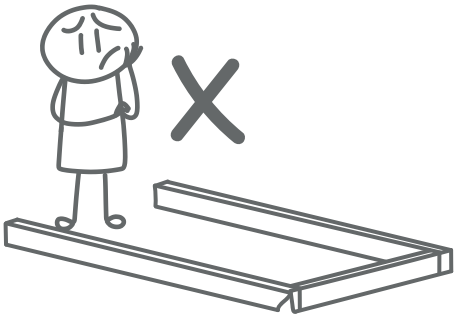

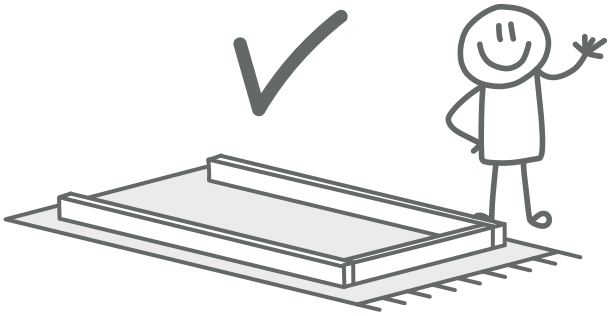

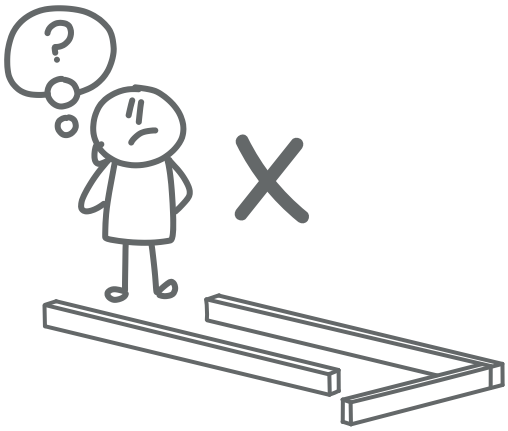

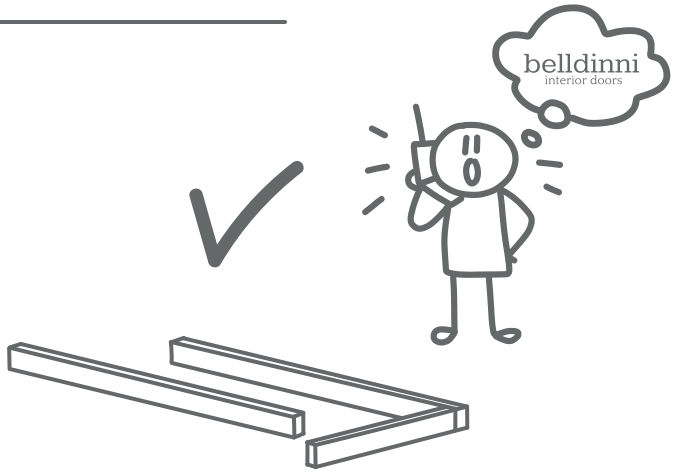
belldinni
interior doors

NECESSARY TOOLS

Not included

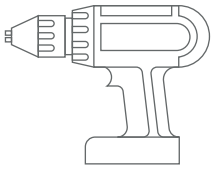

Screwdriver

Screw 1 5/8"

Pencil

Tape measure

Garbage bags

Level

Shims
(not included)

Safety glasses

DOOR PARTS

(some fixtures may not be included)

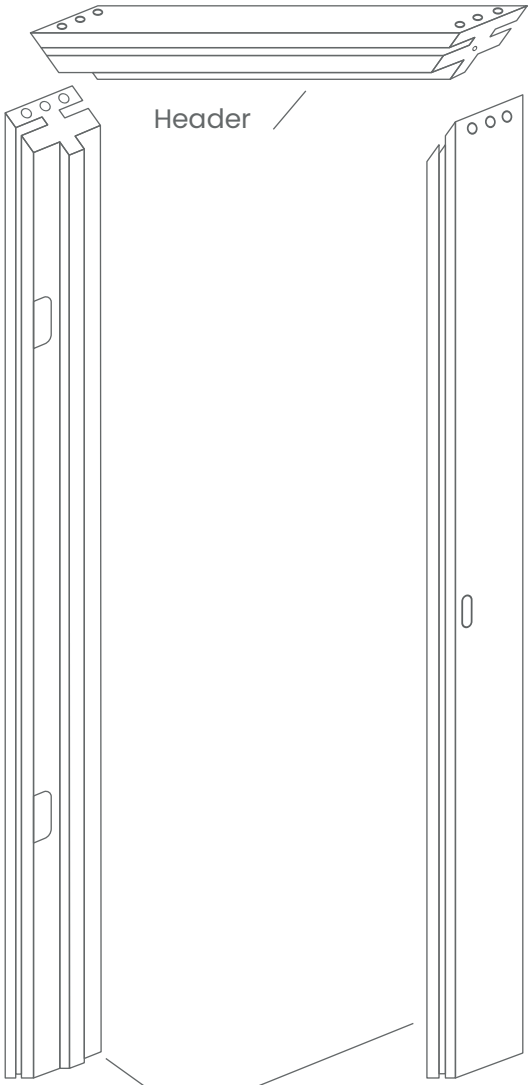

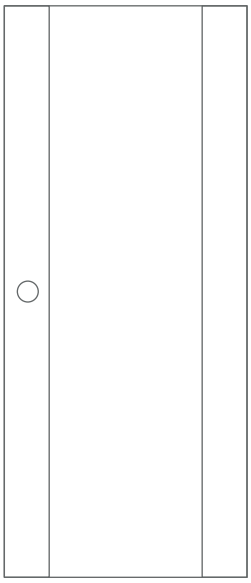

Door slab is already predrilled for hinges and a handle.

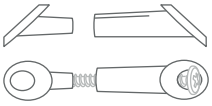

Screw inside
white connector 4 pcs

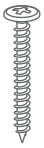

Black 4 pcs.
opposite connector

Screw 6 pcs.

Screw 18 pcs.

Dowel 2 pcs

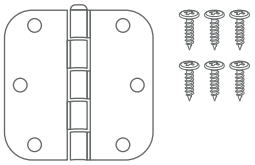

Qty depends on the height of the door (2 or 3 pcs).
Hinge type can vary

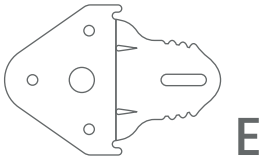

Quick hanger 6 pcs
(may not be included)

Do not use standard nails and hammer

Do not step on the door

Do not lay down on edges

Do not lean on the wall

WARNING!

Please do not throw away the packing cardboard until the end of the installation

STEP 1.

Check your order

Check the contents of your door unit according to the door parts description above (page 3)

If you have any problems or questions please contact us via diy@belldinni.com or by phone # 646 680 3191

Measure roungh opening to make sure all sizes are correct:

Door slab should be at least 2" narrower than the opening width, we recommend the door slab to be 2,5" narrower than the opening width.
Door slab should be at least 2" shorter than the opening height.

Check swing directions according to the chart below

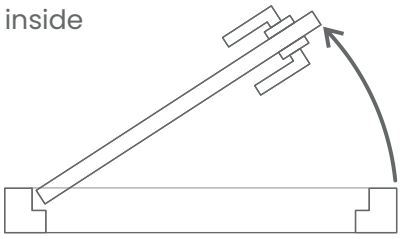

Left hand inswing

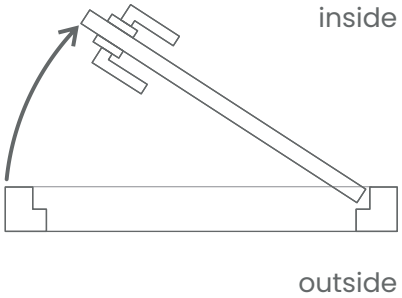

Right hand inswing

STEP 2.

Connect the door frame

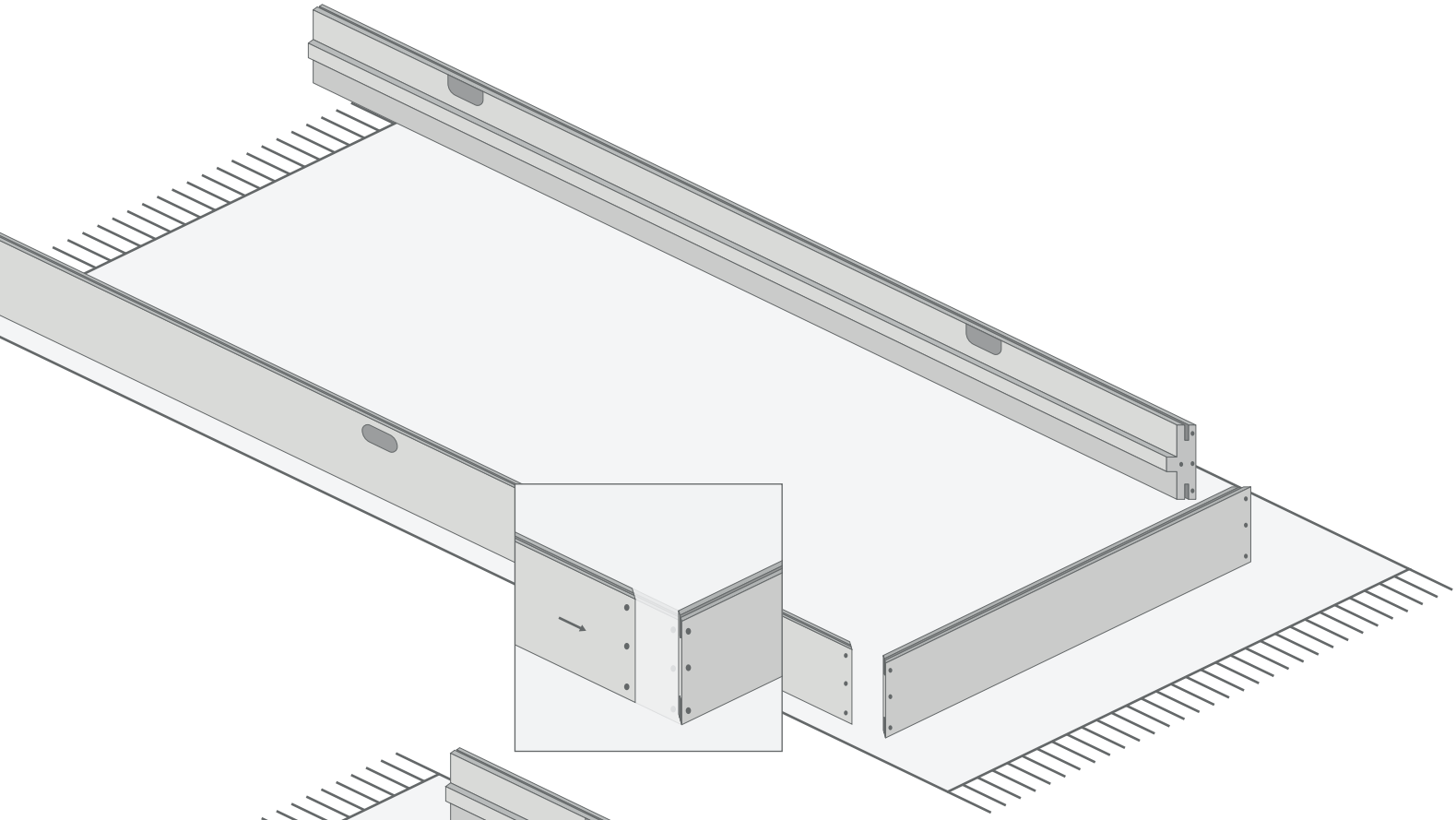

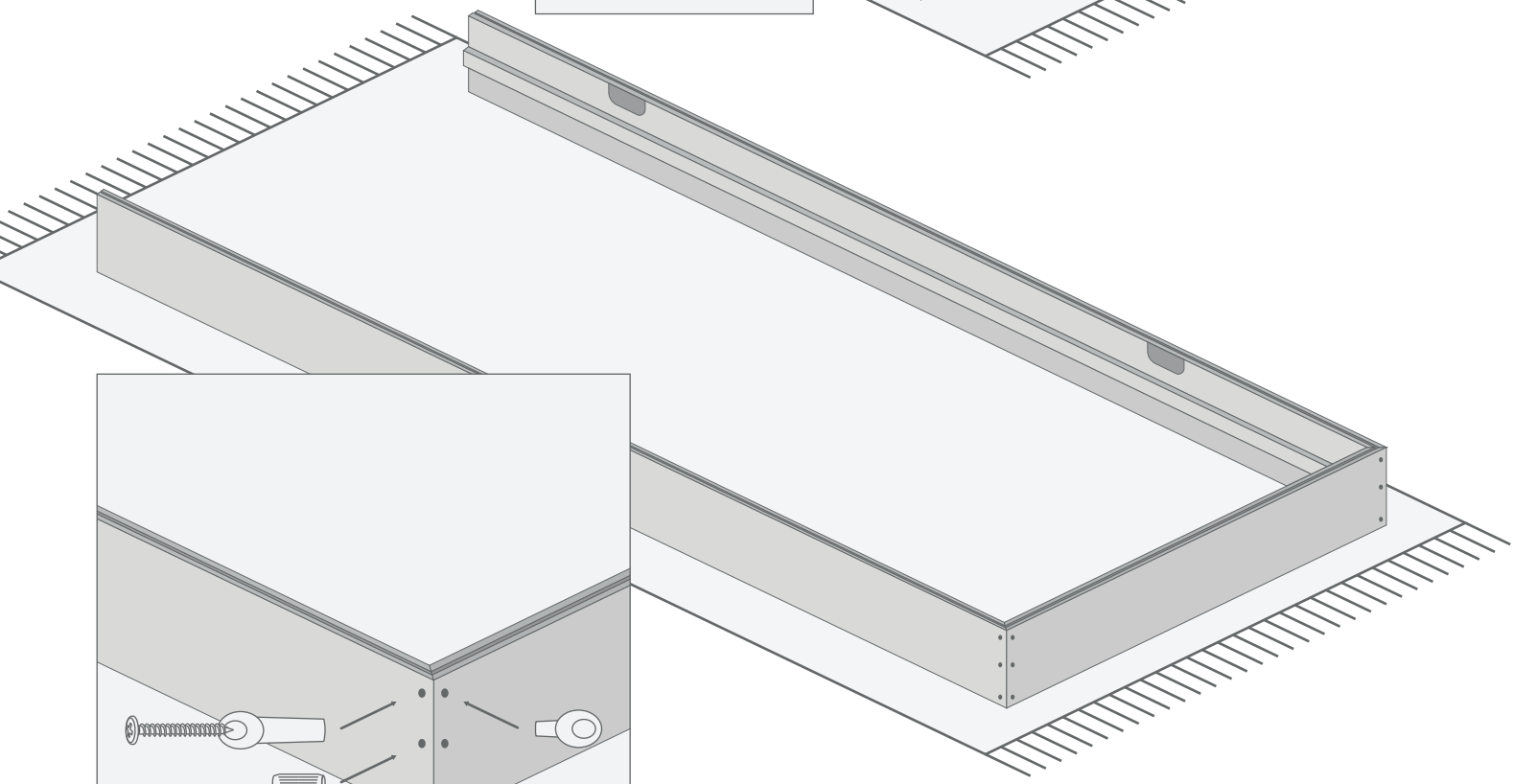

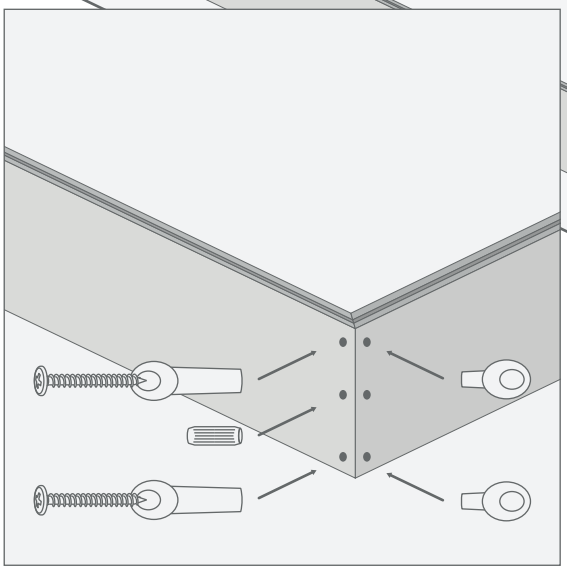

B X4
C X4
D X2

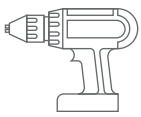

STEP 3.

Attach ez hangers

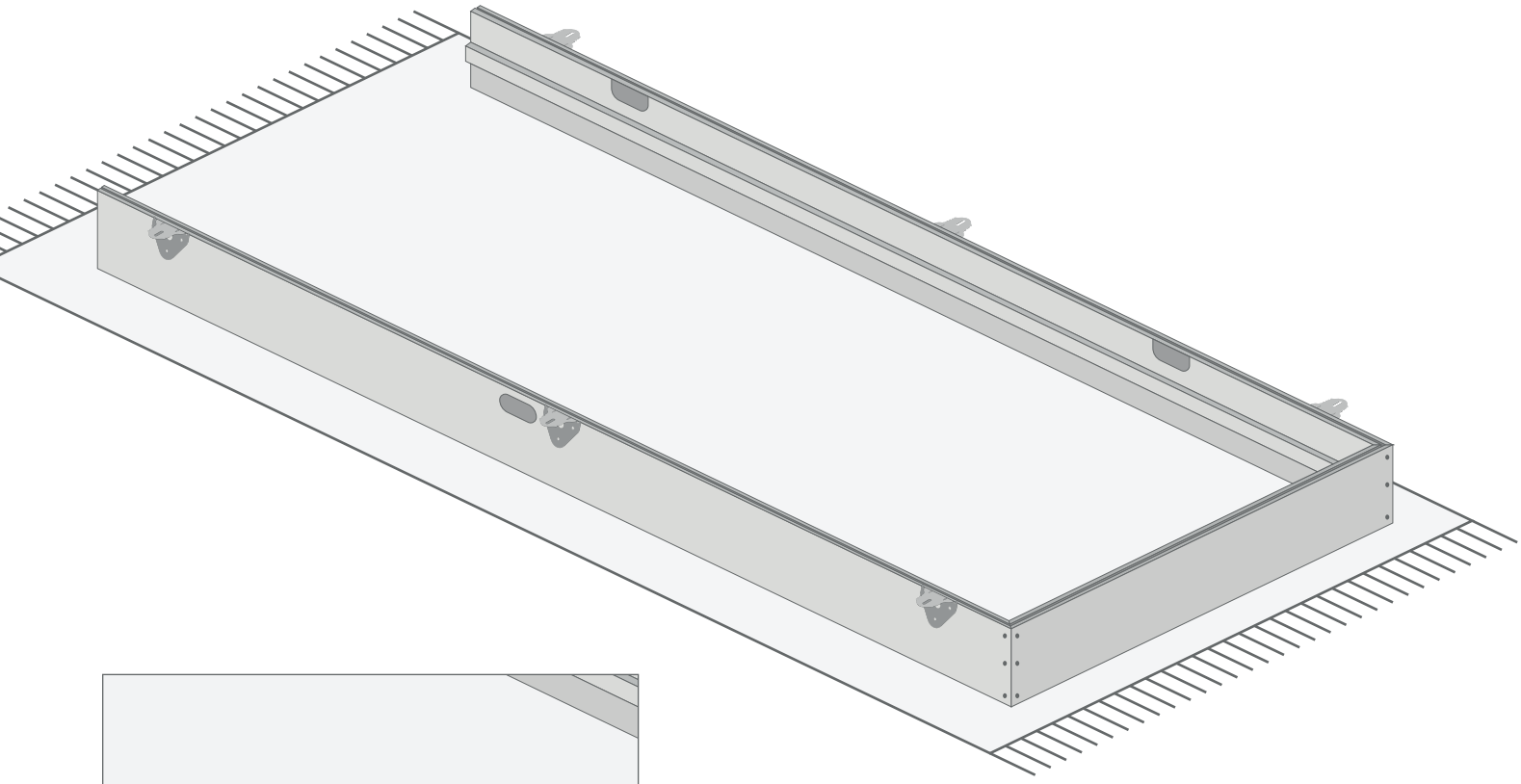

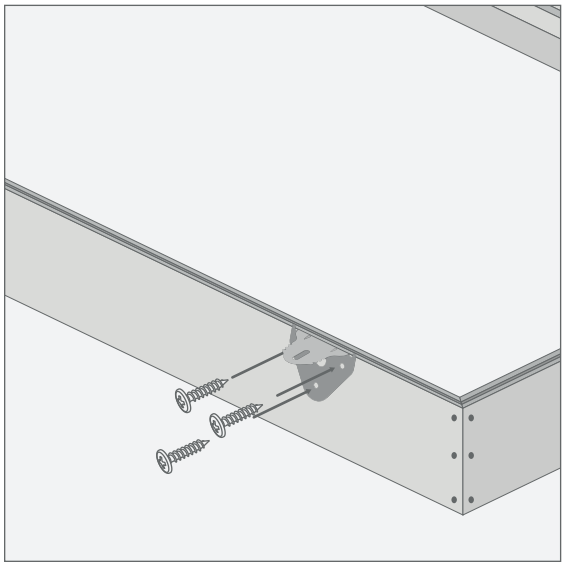

G X18

E X6

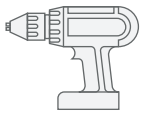

STEP 4.

Lay out the markings

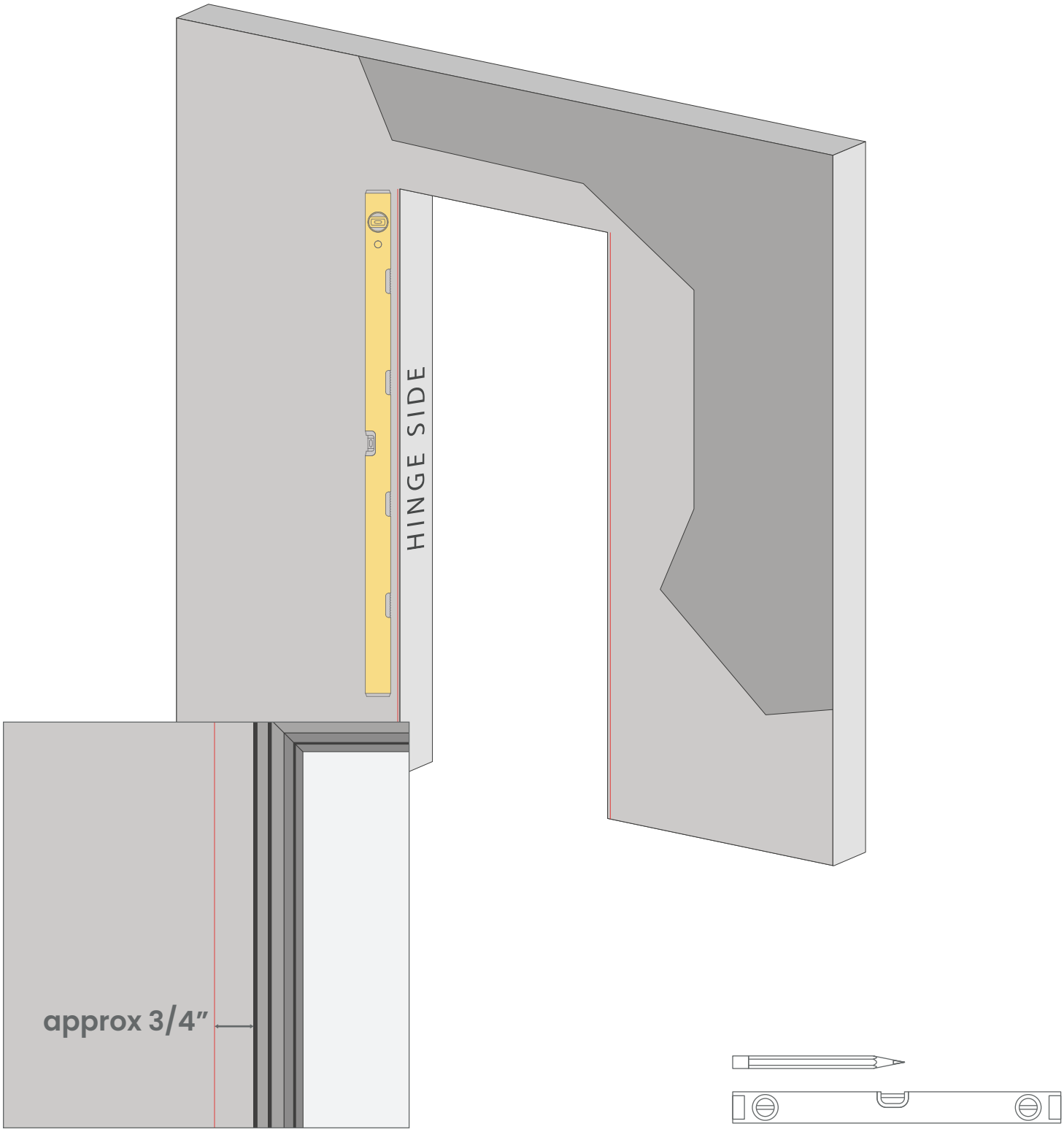

STEP 5.

Install the door frame

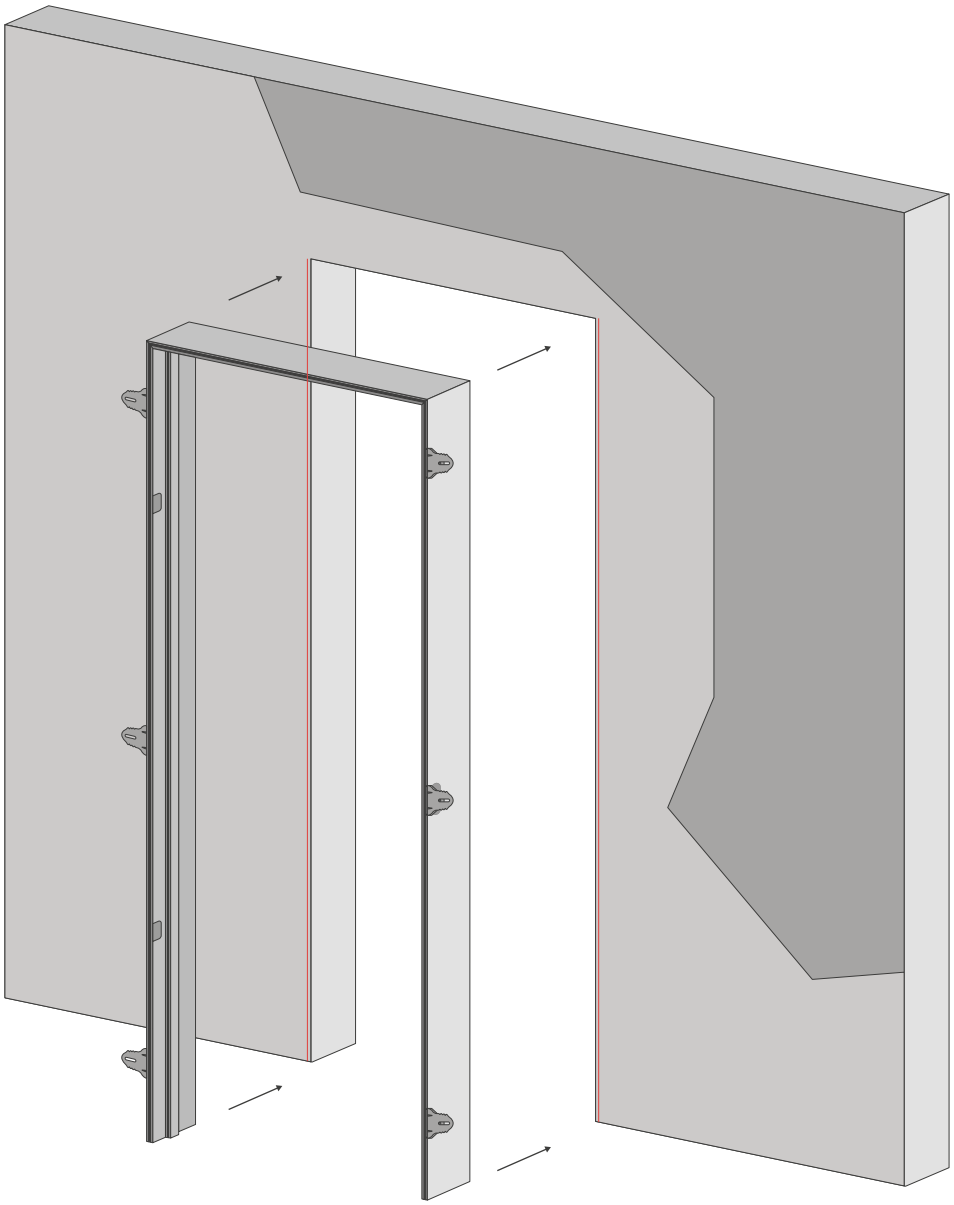

STEP 6.

Align and screw in the door frame

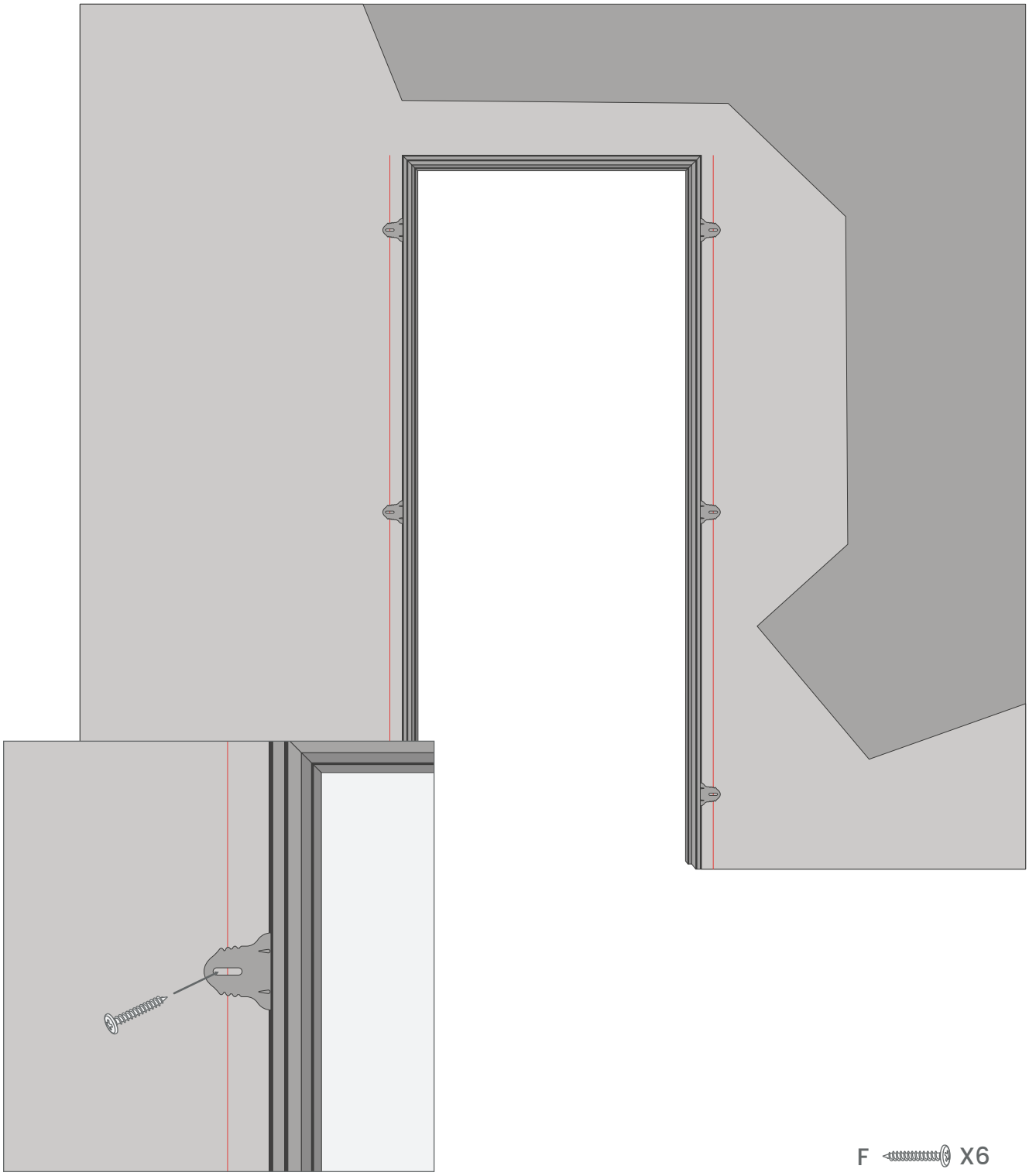

F X6

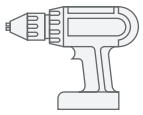

STEP 7.

Screw the hinges to the door slab

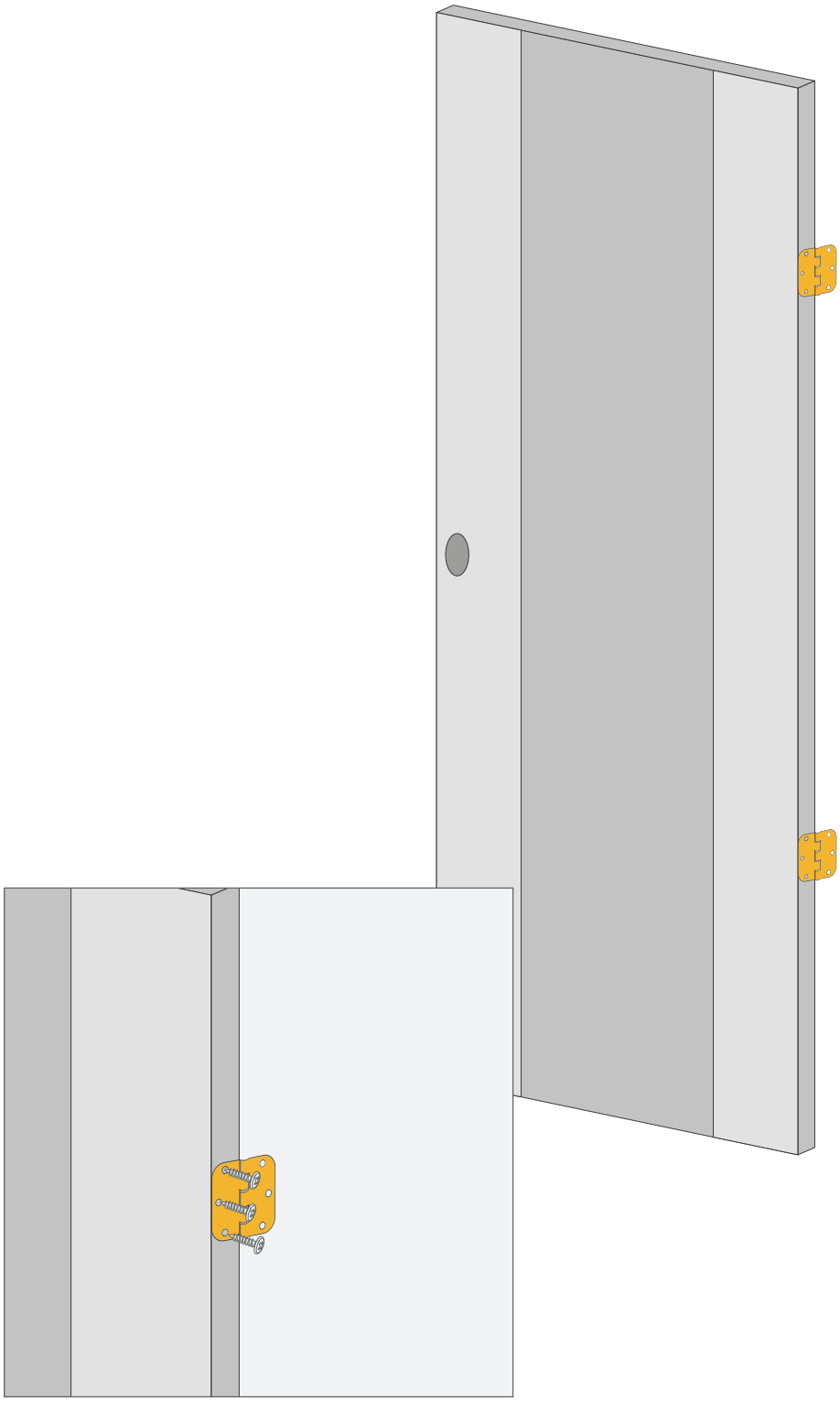

X2

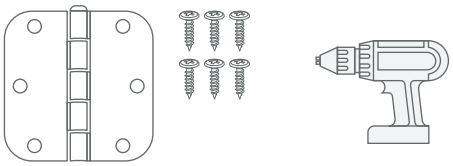

STEP 8.

Screw on the door hinges

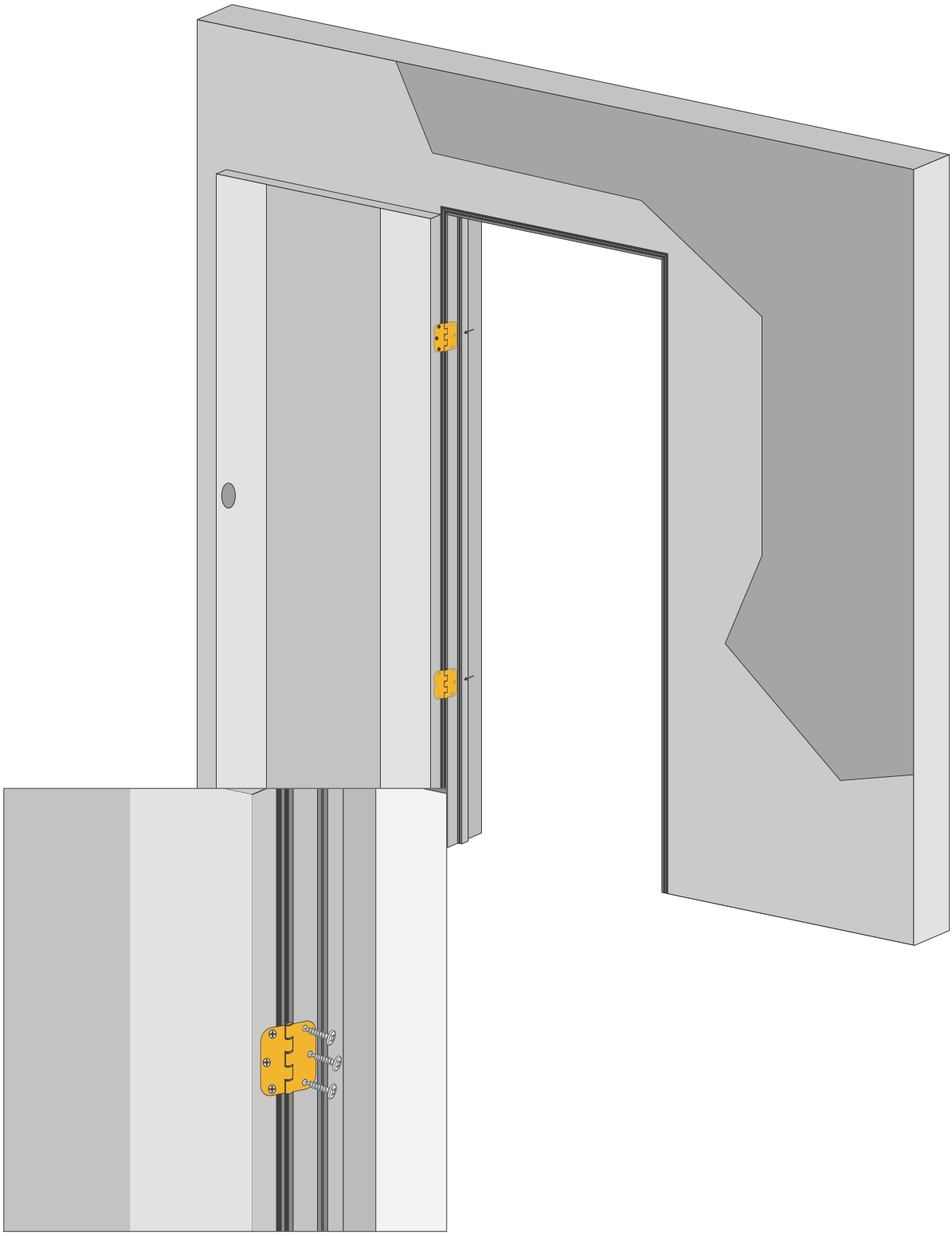

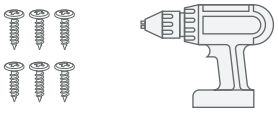

STEP 9.

Install the door slab

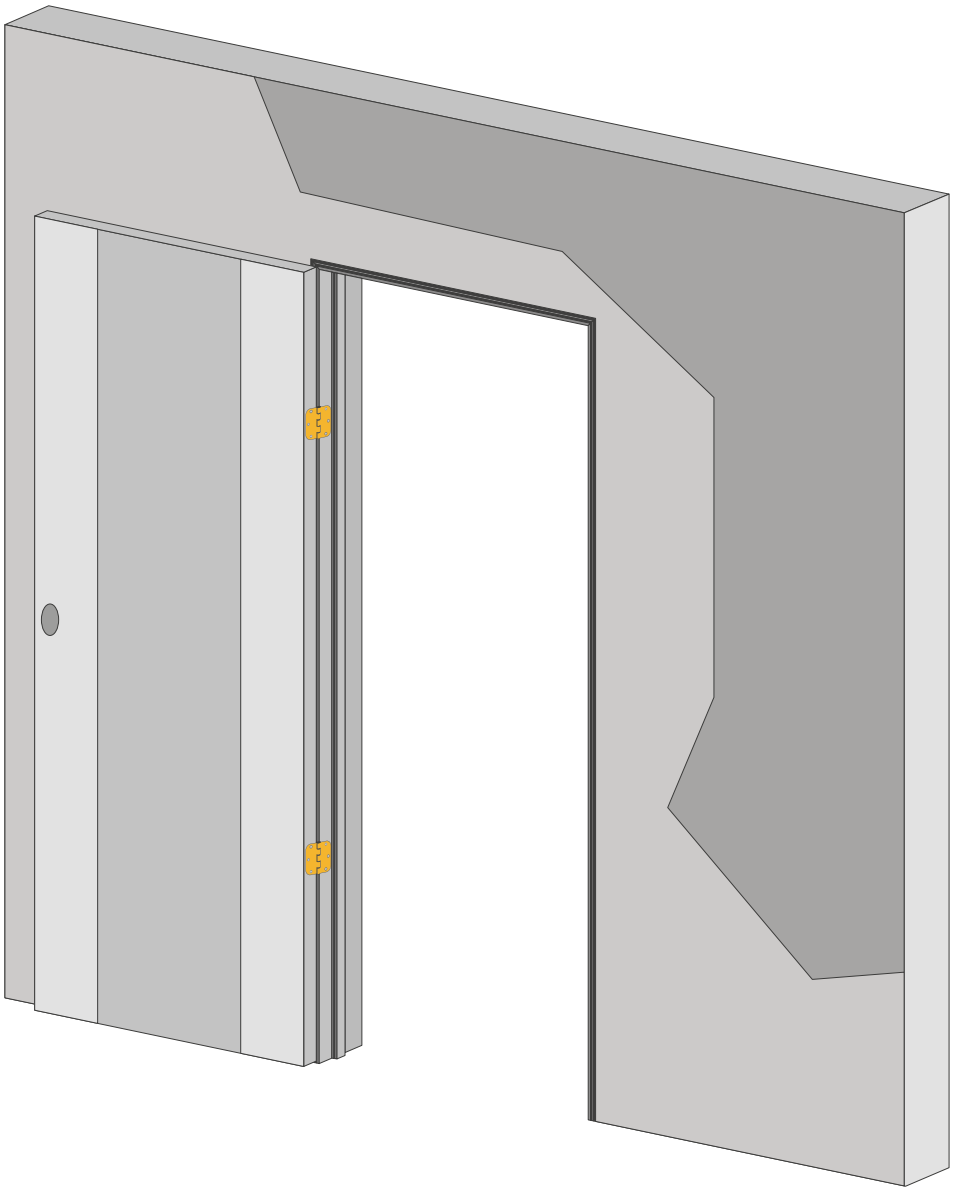

STEP 10.

Adjustment and installation

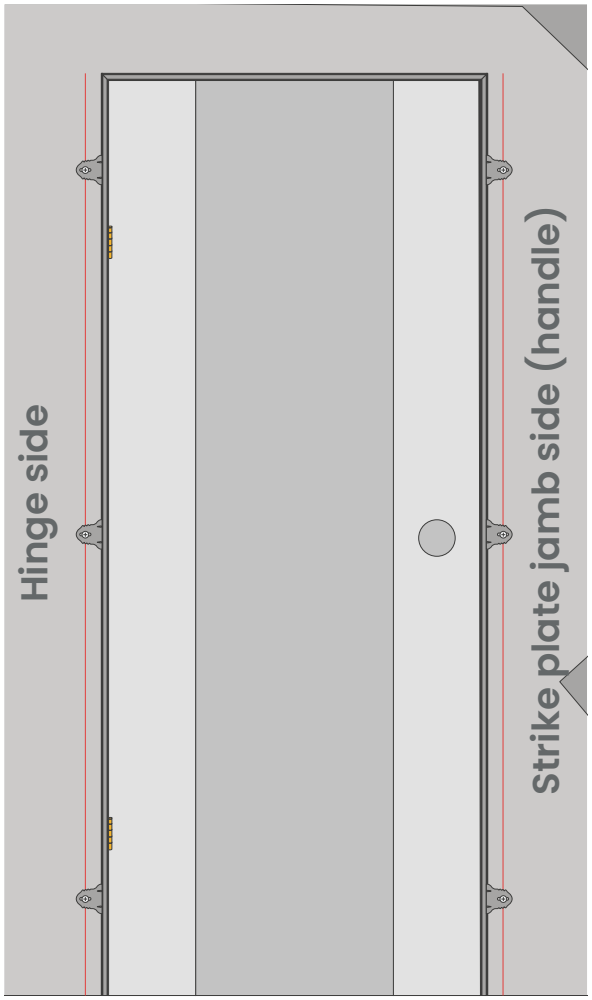

Check and adjust the hinge side of the jamb according to the level first.

Fix the hinge side jamb to the wall with the help of EZ hangers, "A" screws (1 5/8") (not included) and shims (not included) if needed.

Unscrew the screws of the strike plate side (handle side) of the jamb.

Align the door slab within door jamb (frame) minding the gaps between the door slab and the door jamb.

Hinge side of the jamb is already fixed to the wall, so the strike plate side of the jamb and the header jamb need to be adjusted.

Please note, metal EZ Hangers have the ability to be bent. In some installation cases you would need to bend them during the door installation to be as close as possible to the best installation result.

Fix the strike plate side (handle side) of the jamb and the header jamb to the wall with the help of EZ Hangers, "A" screws (1 5/8") (not included) and shims (not included) if needed.

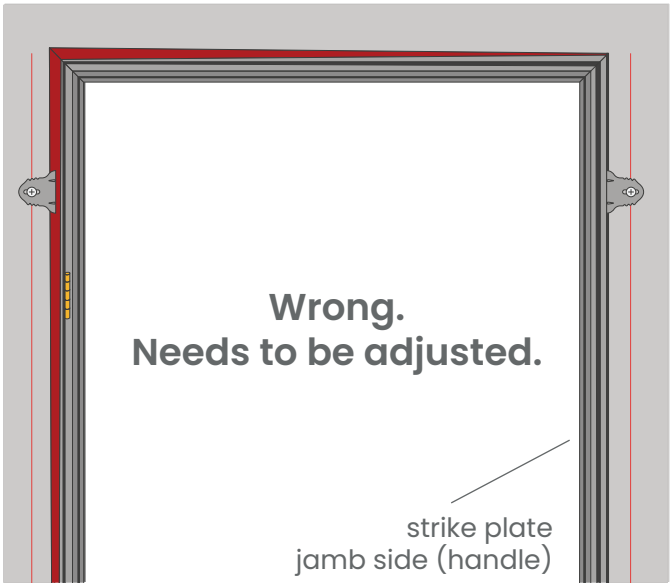

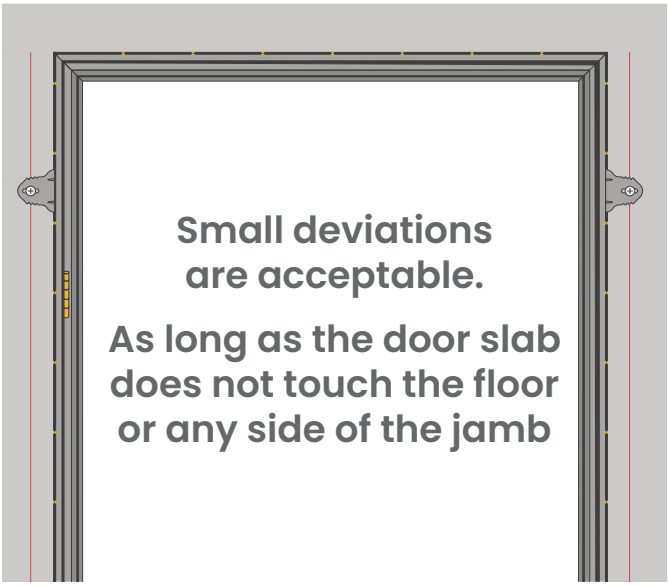

STEP 11.

Moldings installation

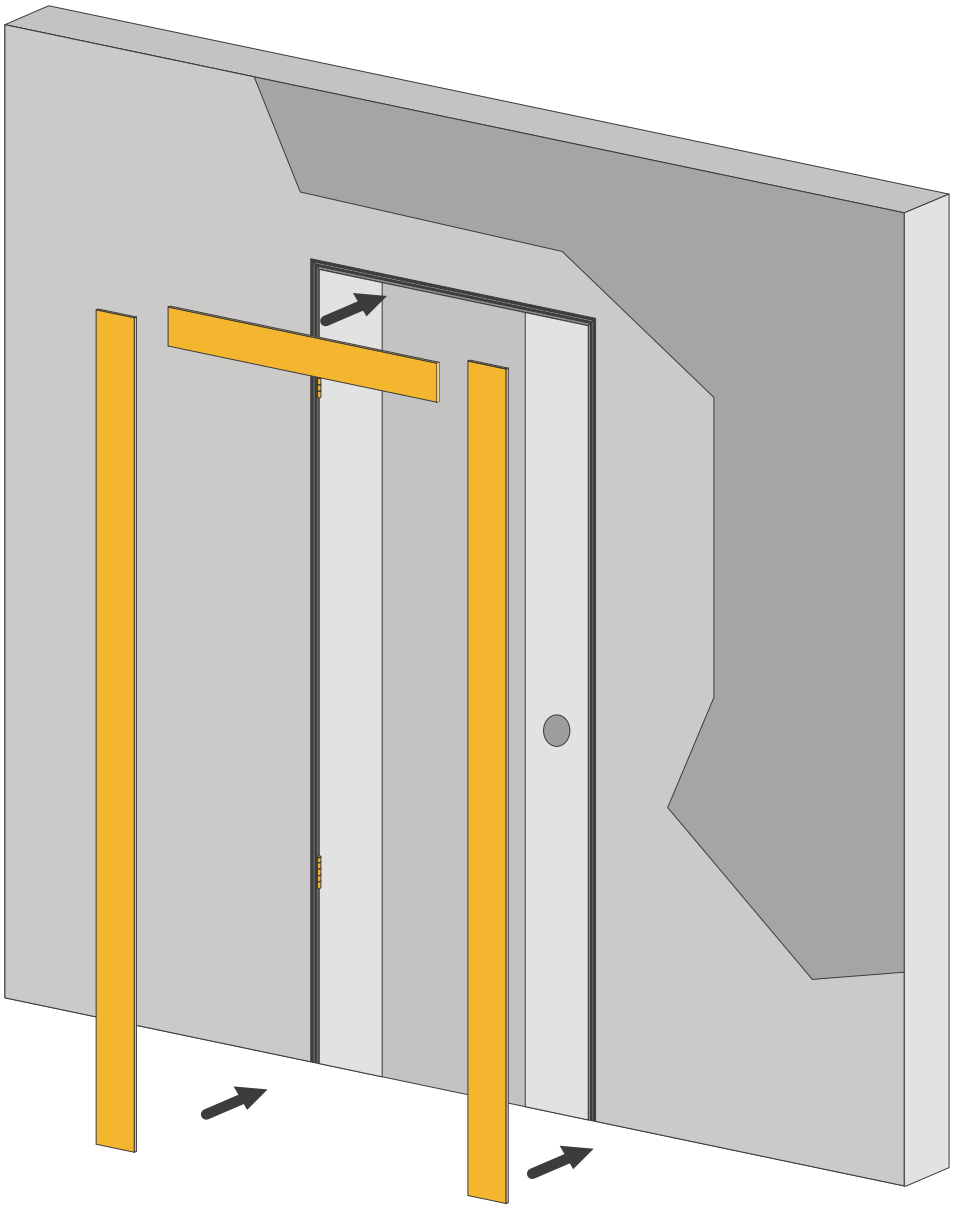

STEP 12.

It's done

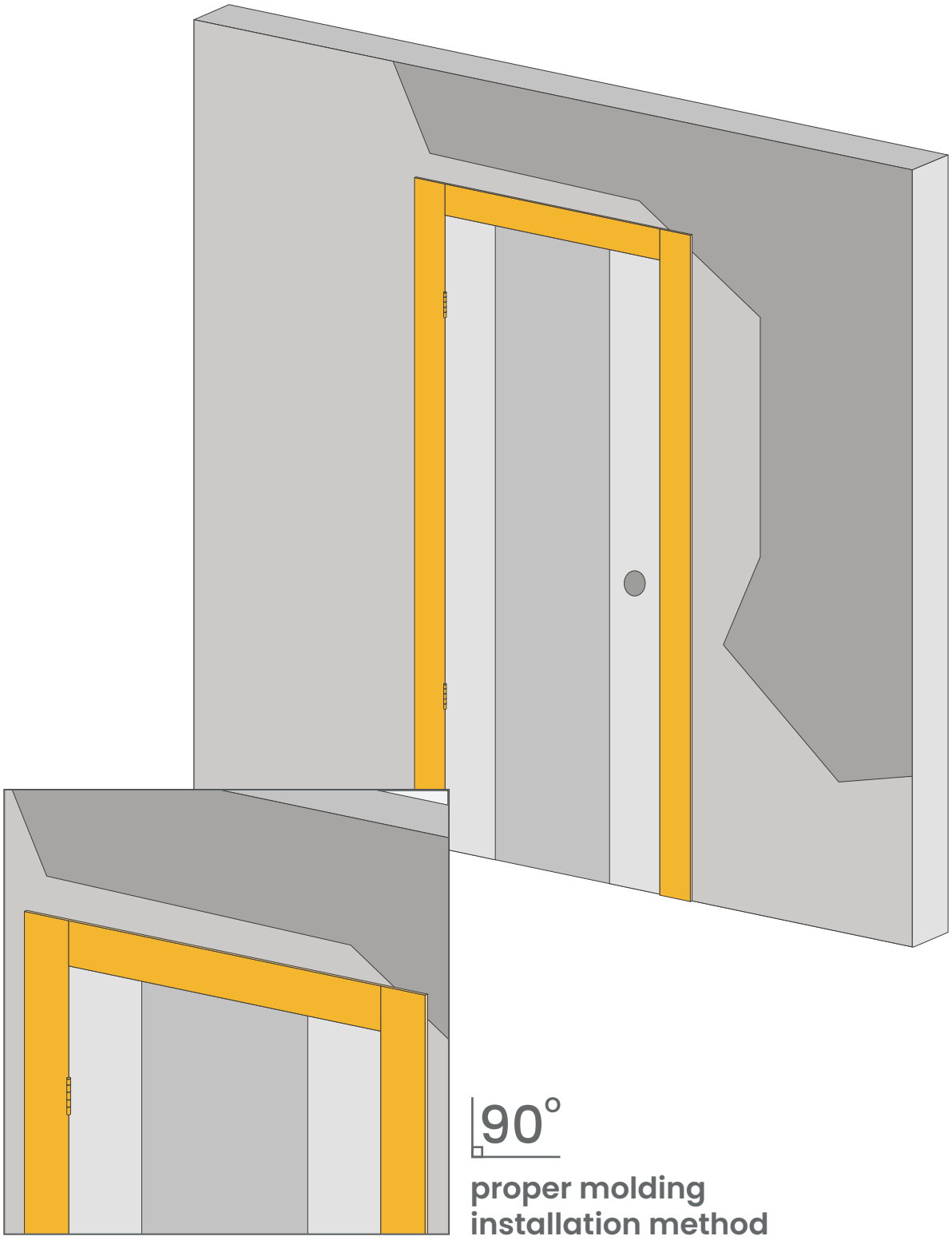

90°

proper molding installation method