Functional Table

Assembly Instructions - Please keep for future reference

N844P263662

Be careful! At least two people are required

WARNING

CSU

This product is NOT a Clothing Storage Unit (CSU).
DO NOT use it for clothing storage.
Improper use may cause furniture tipover.

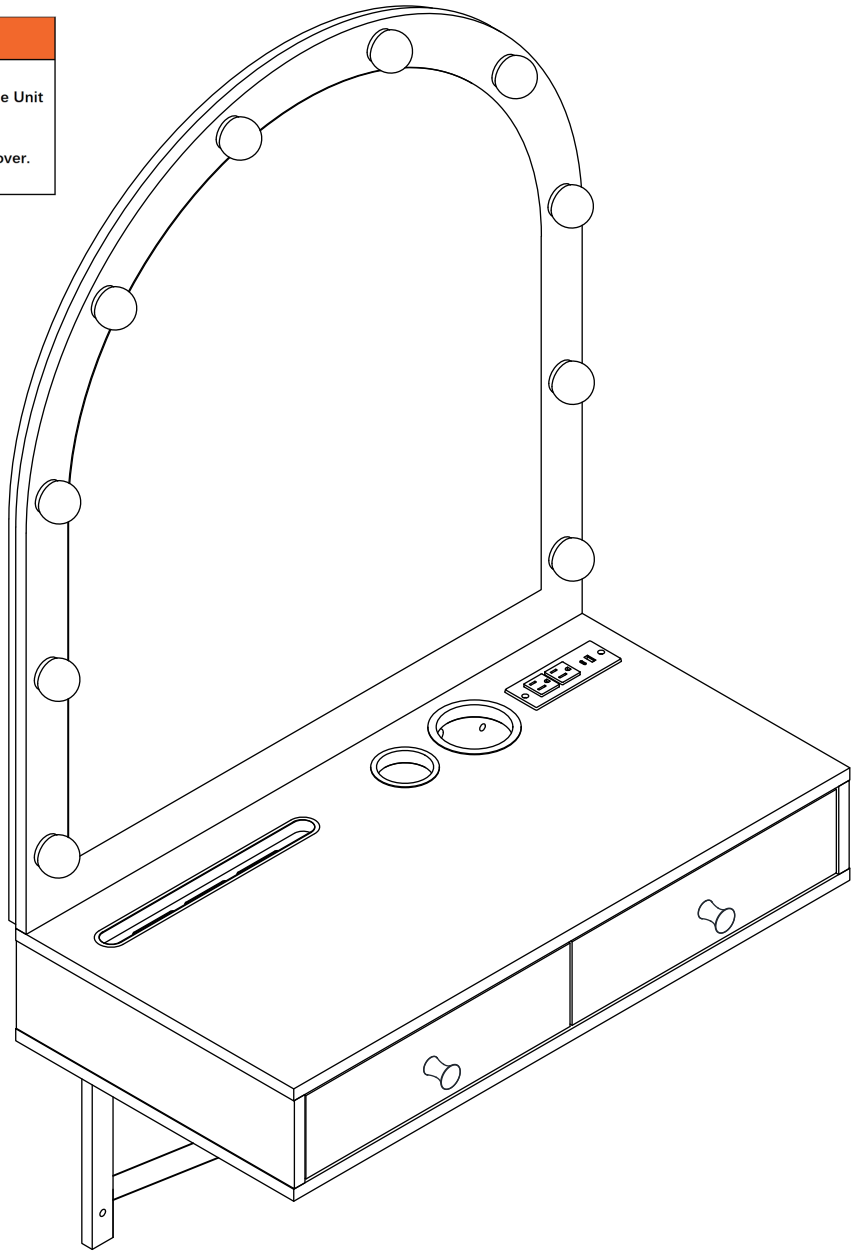

Important – Please read these instructions fully before starting assembly

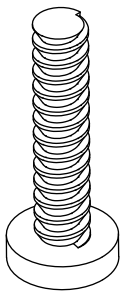

BOLT
M6*25mm
Ⓔ

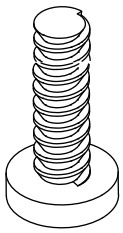

BOLT
M6*20mm
Ⓝ

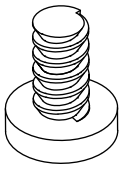

BOLT
M6*10mm
Ⓚ

BOLTM6X25MM
BOLTM6X20MM
BOLTM6X10 MM

DE: Bitte beachten Sie, dass die Formen derSchrauben E,N und K ahnlich sind. Bitteinstallieren Sie entsprechend der Anleitung und unterscheiden Sie sie!

UK: Please note that the shapes of screws E,N and K are similar.Please install according to the instructions and distinguish them!

FR:E,N et K sont similaires. Suivez les instructions pour les installer et les différencier!

IT: E,N. K sono simili. Si prega di installarli e distinguerli secondo le istruzioni!

ES: Por favor, tenga en cuenta que las formas de los tornillos E,N y K son similares. Porfavor,instalelos de acuerdo con las instrucciones ydistingalos

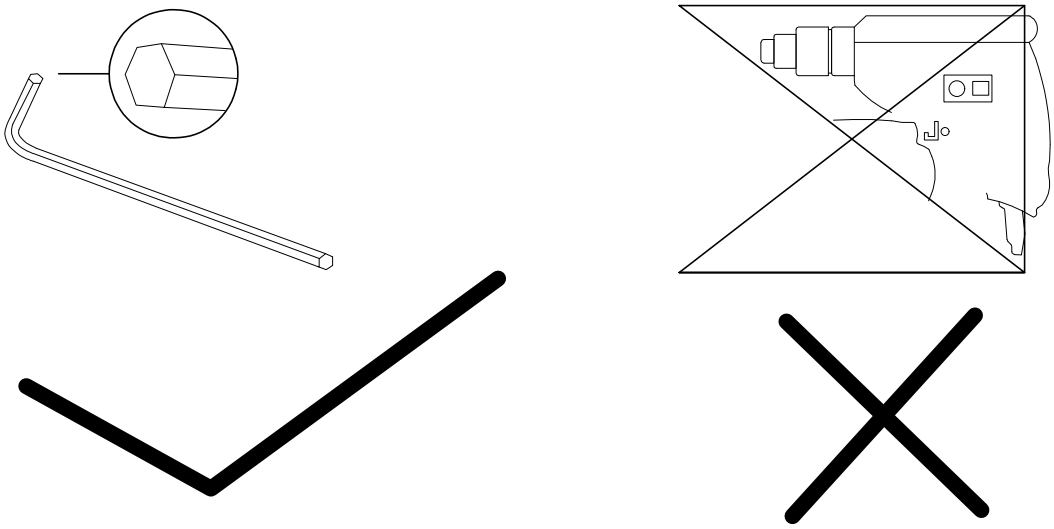

(DE): Verwenden Sie beim Anbringen der Tischplatte keinen Bohrer! Bitte verwenden Sie die im Paket enthaltenen Werkzeuge.

(UK): Do not use an electric drill when installing the desktop! Please use the tools provided in the package.

(FR): Ne pas utiliser de perceuse électrique lors de l'installation du plateau de table ! Veuillez utiliser les outils fournis dans l'emballage.

(IT): Non utilizzare un trapano elettrico durante l'installazione del piano del tavolo! Si prega di utilizzare gli strumenti forniti nella confezione.

(ES): ¡No utilice un taladro eléctrico al instalar el escritorio! Por favor, use las herramientas incluidas en el paquete.

(NL): Gebruik geen elektrische boormachine bij het monteren van het tafelblad! Gebruik de meegeleverde gereedschappen uit de verpakking.

(SE): Använd inte en elektrisk borrmaskin vid montering av bordsskivan! Använd de verktyg som medföljer i förpackningen.

(PL): Nie używaj wiertarki elektrycznej podczas montażu blatu! Użyj narzędzi dołączonych do opakowania.

Safety and Care Advice

Important – Please read these instructions fully before starting assembly

• Check you have all the components and tools listed on the following pages.

• Remove all fittings from the plastic bags and separate them into their groups.

• Keep children and animals away from the work area, small parts could choke if swallowed.

• Make sure you have enough space to layout the parts before starting.

• During assembly do not stand or put weight on the product, this could cause damage.

• Assemble the item as close to its final position (in the same room) as possible.

• Assemble on a soft level surface to avoid damaging the unit or your floor.

• Parts of the assembly will be easier with 2 people.

• To reduce the likelihood of damaging your product please ensure that your power drill is set on a low torque setting.

Care and maintenance

• Only clean using a damp cloth and mild detergent, do no use bleach or abrasive cleaners.

• From time to time check that there are no loose screws on this unit.

• This product should not be discarded with household waste. Take to your local authority waste disposal centre.

Handy Hints

• Assemble all parts and bolts loosely during assembly, only once the product is complete should you fully tighten the bolts

• Regularly check and ensure That all bolts and fittings are tightend properly.

WARNING
In order to help prevent overturning – please follow these instructions

To help prevent product toppling over please follow the below steps:-

Use the anti tip stap or wall fixing method provided (if applicable)
Do not allow children to climb or hang on the furniture
Do not open more than one drawer at a time
Do not place heavy items in the top drawers
Do not place heavy items on top of the furniture, unless the furniture has been designed for this purpose

Please note that only the anti tip strap is provided.
You will need to provide wall plugs and screws applicable for your wall type

Components - Fittings

Please check you have all the panels listed below

Note:The quantitie below are the correcet amount to complete the assembly. In some cases more fittings may be supplied than are required.

Ⓐ Cam Bolt x18	Ⓑ Cam Lock x18	Ⓒ 3*12mm Screw x18	Ⓓ ST5*48mm Screw x8
Ⓔ 6*25mm Screw x7	Ⓕ Socket x1	Ⓖ handle x2	Ⓗ M4*18mm Screw x2
Ⓘ 6*30mm Wooden tenon x16	Ⓙ J-1 Light bulb x10 J-2 x10 The screw on the light bulb	J-3 power cord x1	Ⓚ M6*10mm Screw x2
Ⓛ Expansion screws x4	Ⓜ 10*40mm Anti tipping screw x4	Ⓝ 6*20mm Screw x4	Ⓞ 4*35mm Screw x8
Ⓟ parts x1	Ⓠ Hook accessories X2	Ⓡ parts x1	Ⓢ parts x1
Ⓣ 5*40mm Screw x4	CL Runner250mm x2 CR Runner250mm x2	DL Runner250mm x2 DR Runner250mm x2	Ⓤ bolt driver x1
Ⓥ Allen key x1	Ⓦ Wrench X1		

Ruler - Use this ruler to help correctly identify the screws

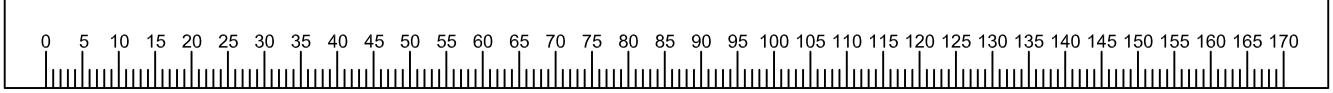

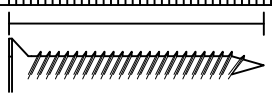

The screws length is measured from the head to the point (35mm screw shown .

Using Camlocks

Step 1

Connect the male camlock as diected in the assembly instructions using a scewdriver.

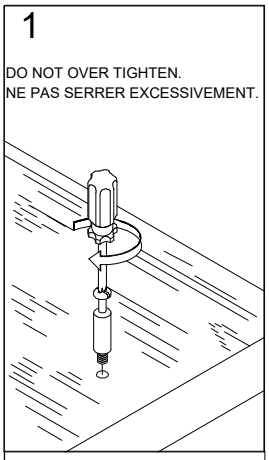

Step 2

Push the male camlock into the entry hole.

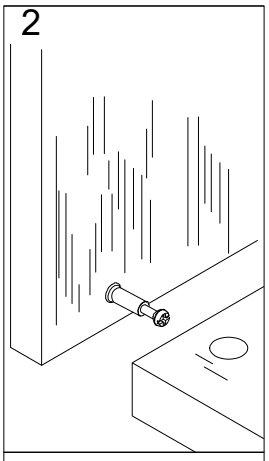

Step 3

Insert the female camlock as shown in the instruction.

Note：ensure that the arrow on the top of the camlock points towards the entry hole for the male camlock.

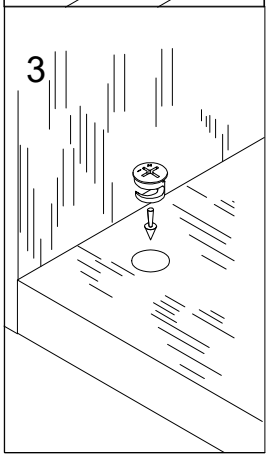

Step 4

Turn the female camlock clockwise with a screwdriver.

You should feel a click when the camlock is locked in place.

The joint is now secure.

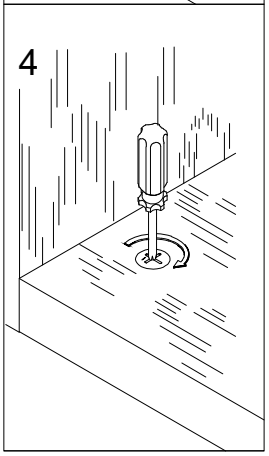

Assembly Instructions

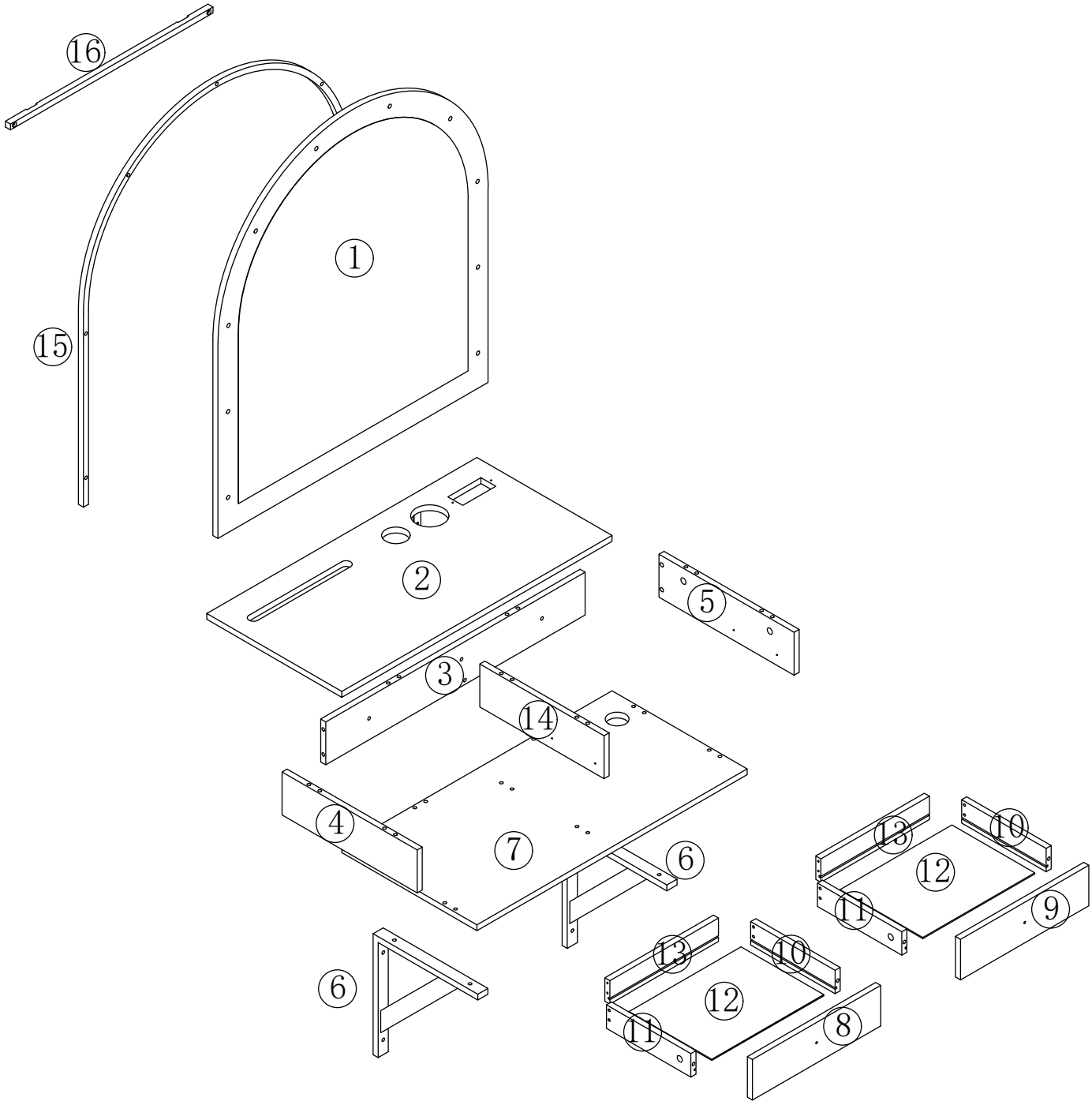

Assembly Instructions

① 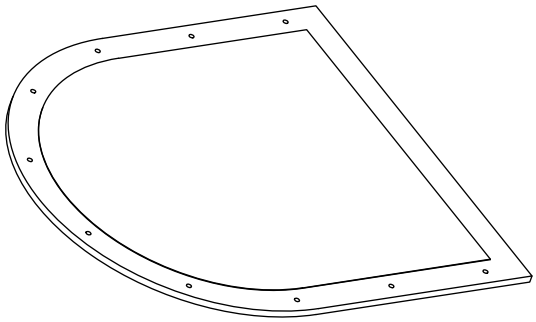 **Framed mirror** 1	⑦ 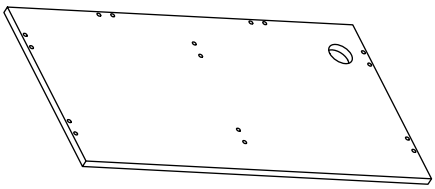 **Bottom Panel** 1
	⑧ 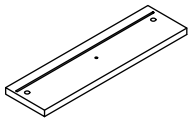 **Drawer Front (L)** 1
② 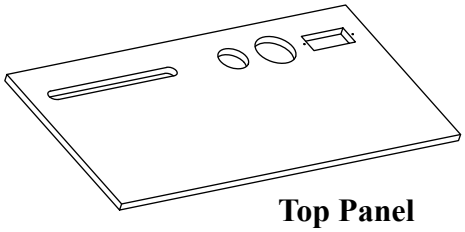 **Top Panel** 1	⑨ 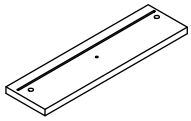 **Drawer Front (R)** 1
③ 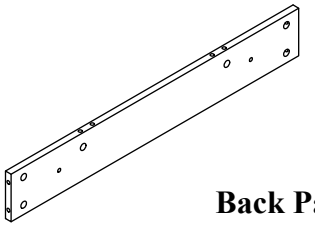 **Back Panel** 1	⑩ 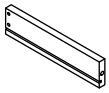 **Drawer Side (R)** 2
④ 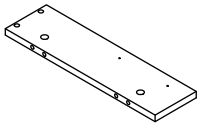 **Side Panel (L)** 1	⑪ 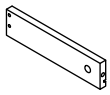 **Drawer Side (L)** 2
⑤ 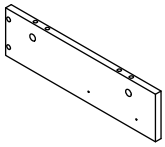 **Side Panel (R)** 1	⑫ 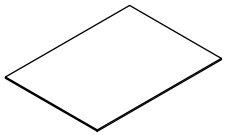 **Drawer Bottom** 2
⑥ 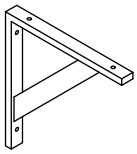 **Triangular Support Bracket** 2	⑬ 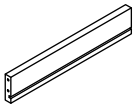 **Drawer Back** 2

Assembly Instructions

⑭	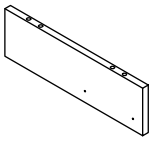 **Middle panel**	1
⑮	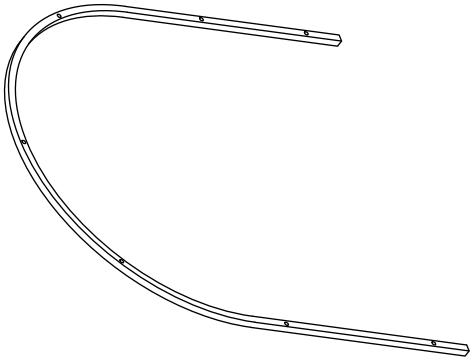 **Curved Hanging Rod**	1
⑯	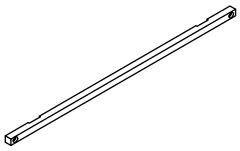 **Straight Hanging Rod**	1

Assembly Instructions

Step 1

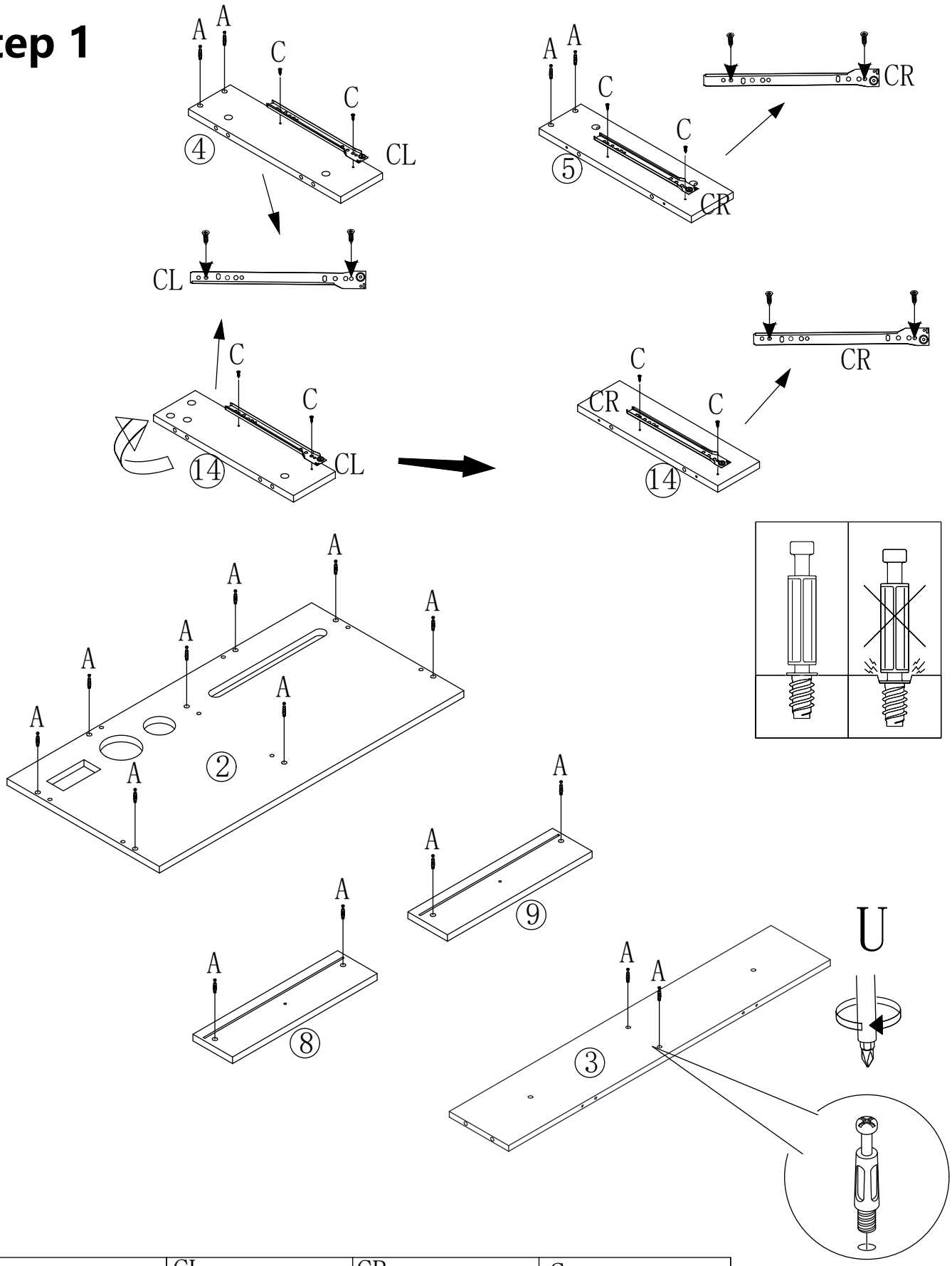

A	CL	CR	C
Cam Bolt x18	Runner250mm x2	Runner25mm x2	3.5*12 Screw x8

Step 2

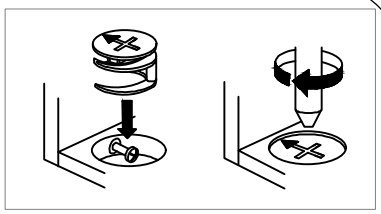

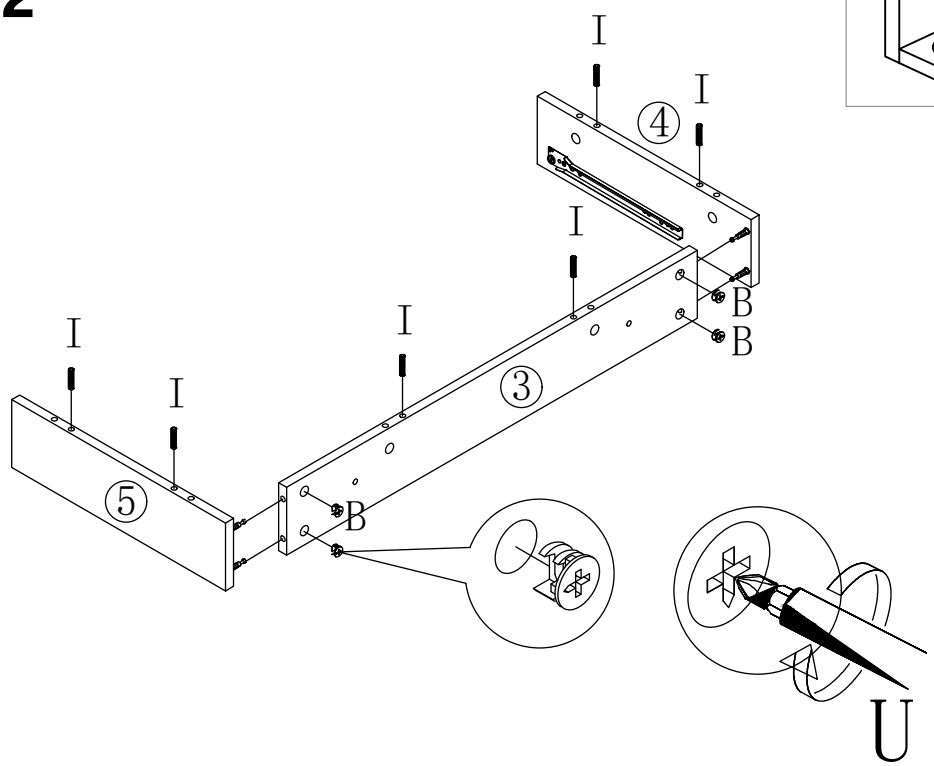

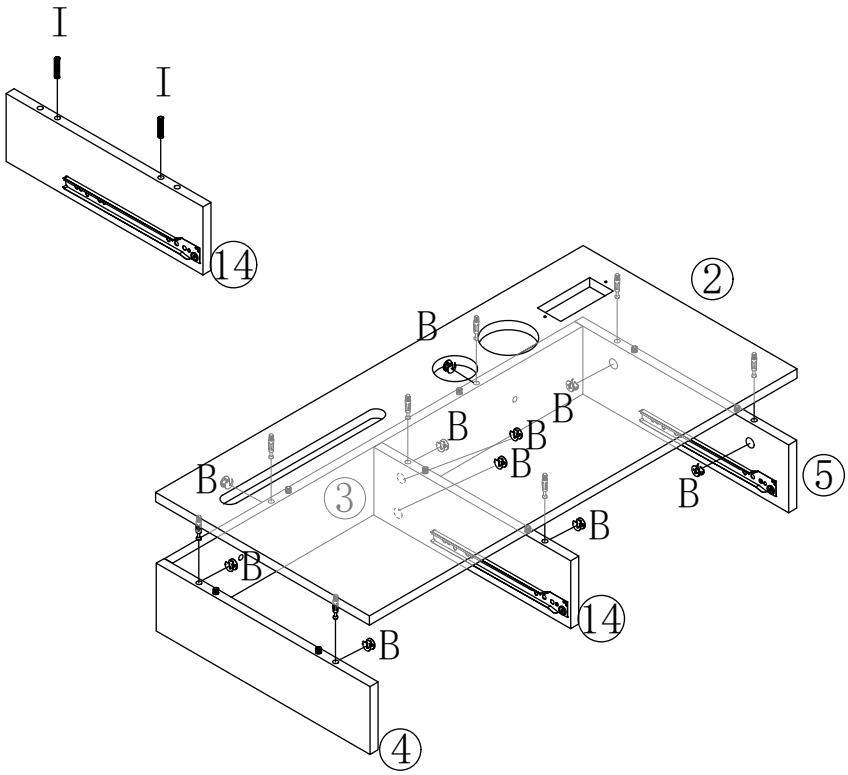

B	I
Cam Lock x14	Wooden tenon x8

Step 3

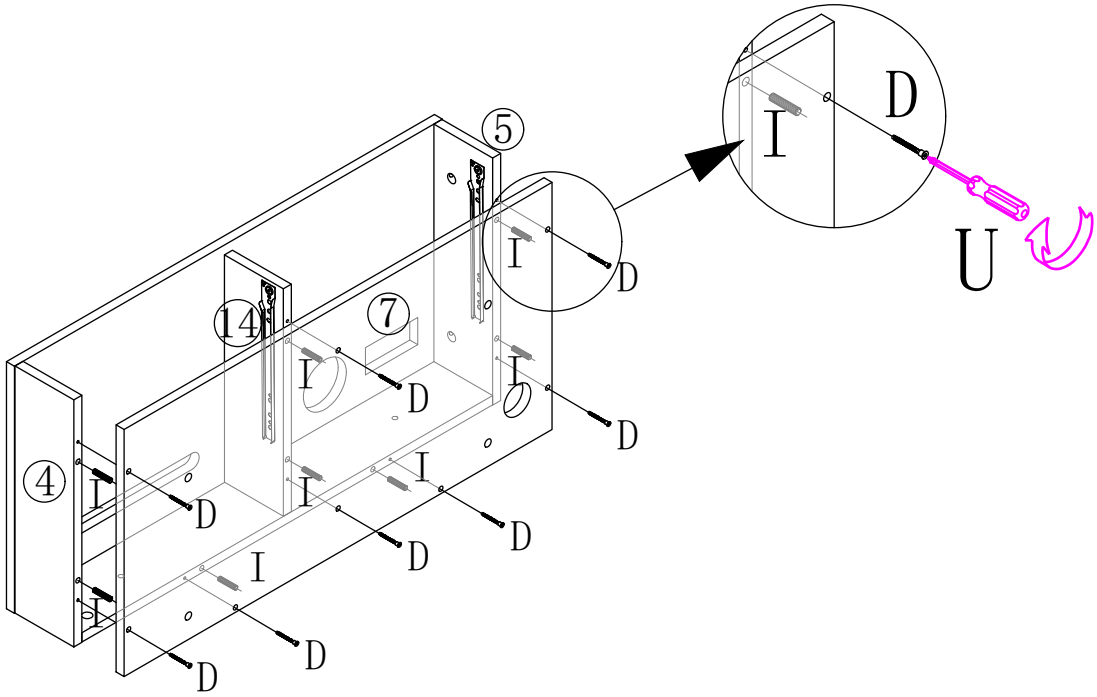

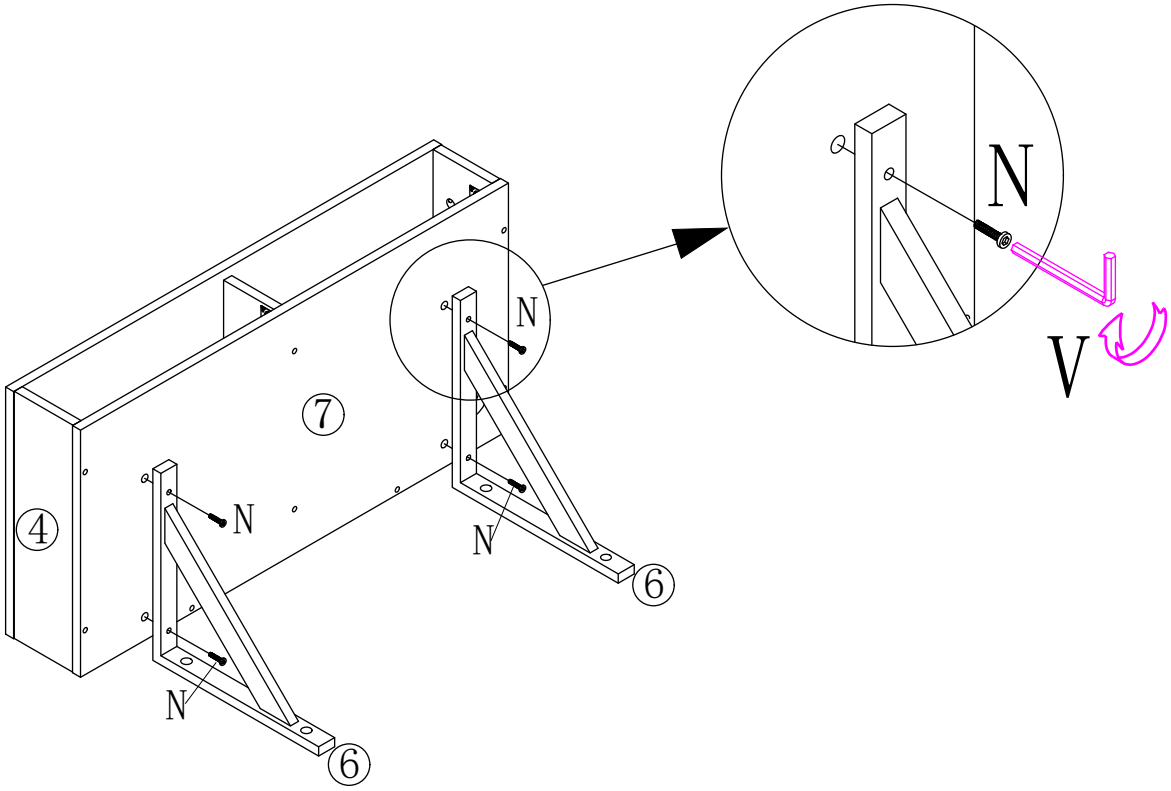

D 6*40mm Screw x8	N 6*20mm Screw x4	I Wooden tenon x8

Step 4

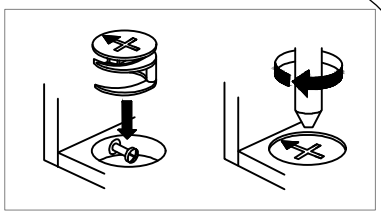

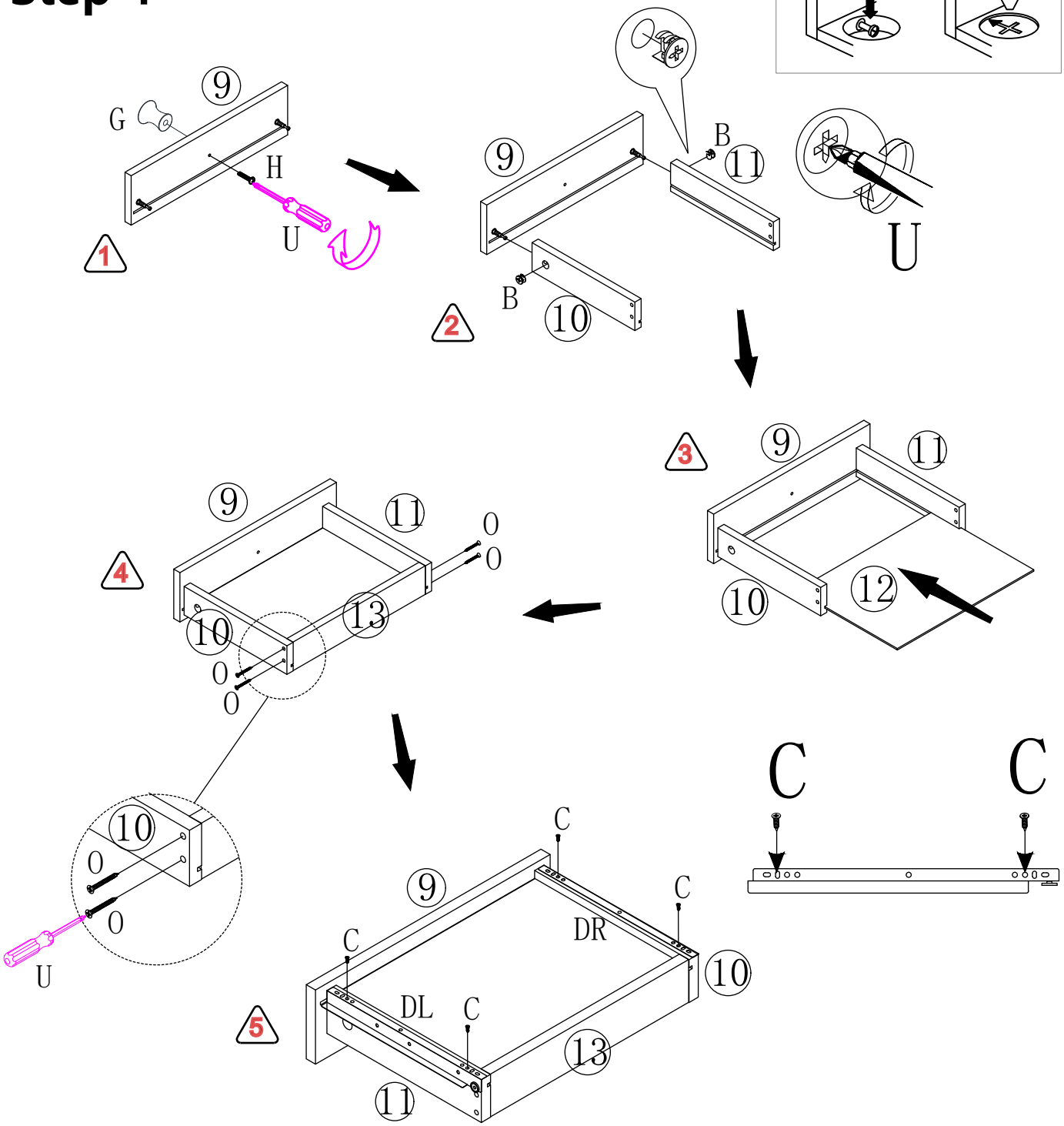

B Cam Lock x2	C 3.5*12 Screw x4	G handle x1	H M4*18 Screw x1
O 4*35 Screw x4	DL Runner250mm x1	DR Runner250mm x1	

Step 5

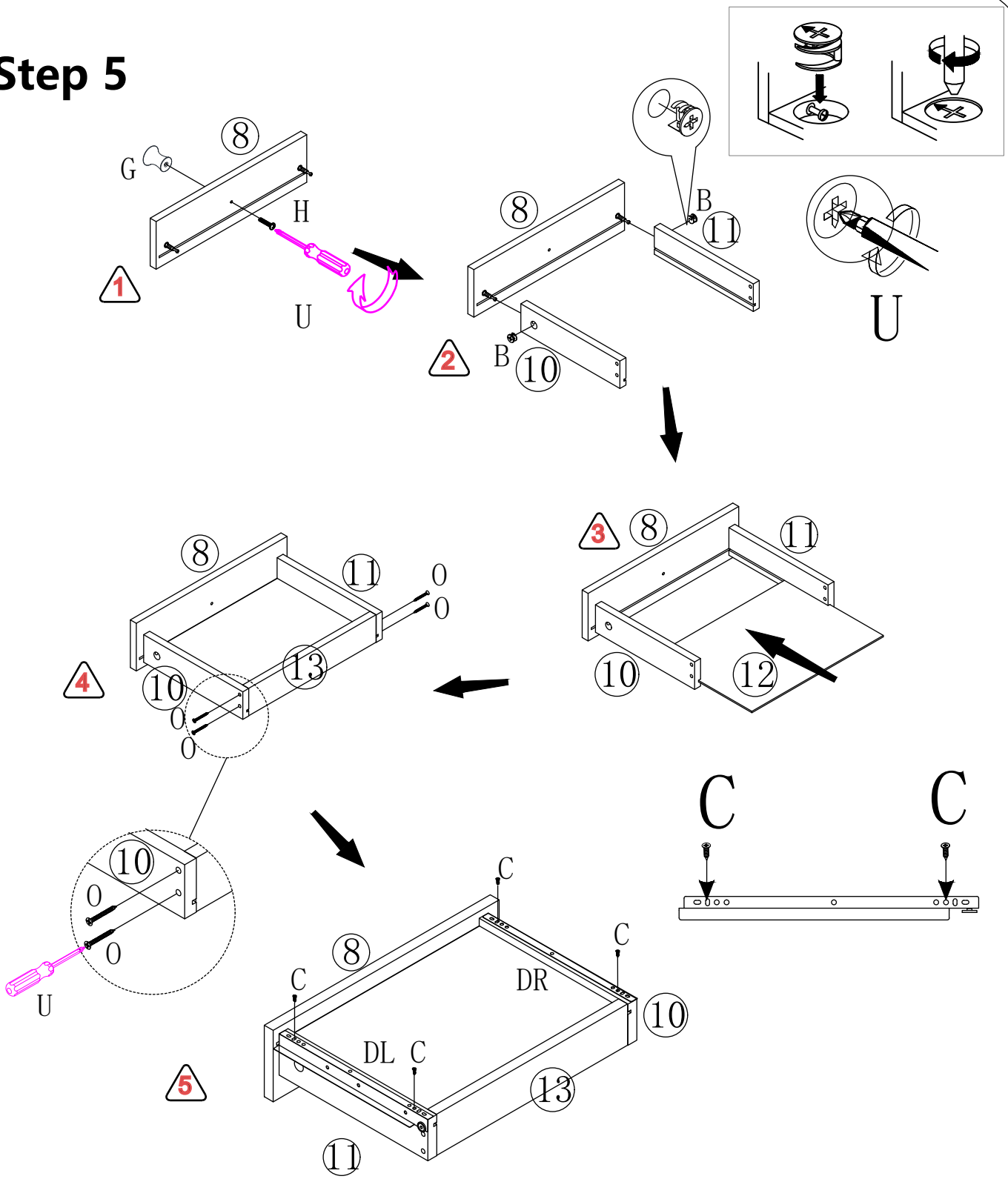

B Cam Lock x2	C 3.5*12 Screw x4	G handle x1	H M4*18 Screw x1
O 4*35 Screw x4	DL Runner250mm x1	DR Runner250mm x1	

Step 6

J-1

J-2

J-1

J-2

J-2

J-2

1

Attention: Only install bulbs with a single wire at this location

J 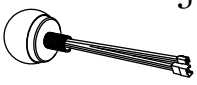 Light bulb x10	J-1
The screw on the light bulb x10	J-2

Step 7

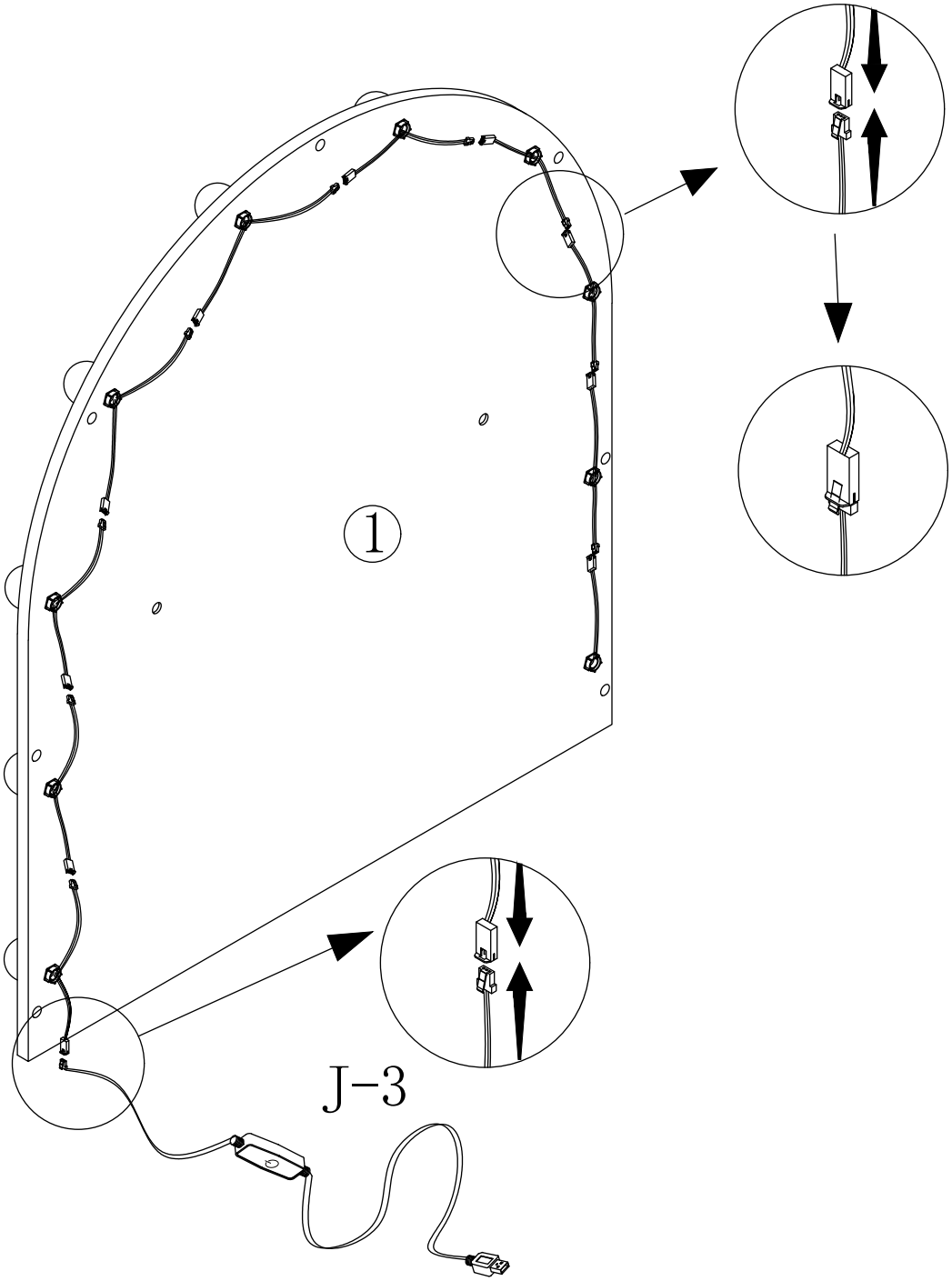

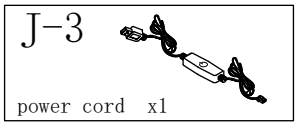

Step 8

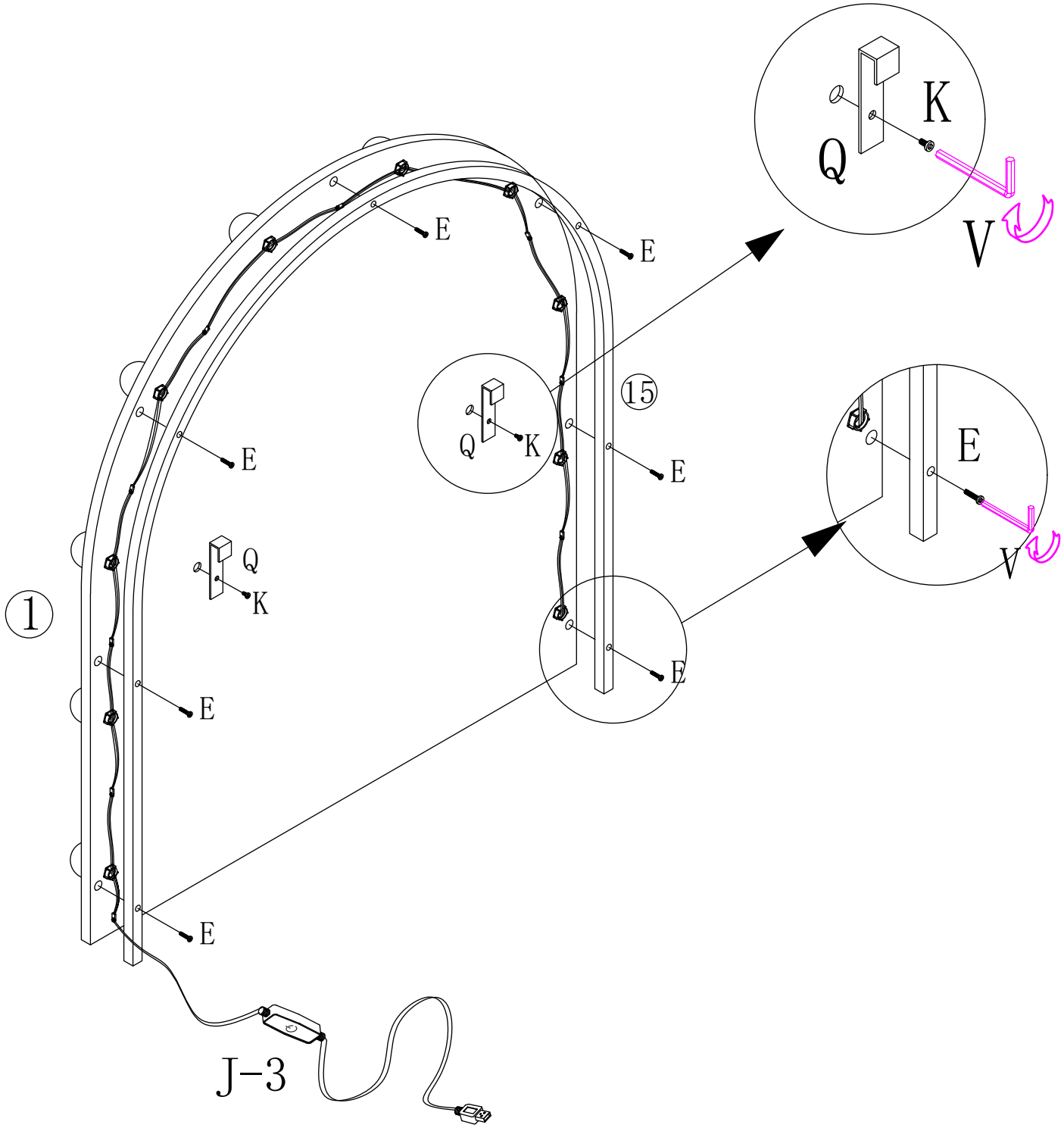

K	Q	E
6*10mm Screw x2	Hook accessories X2	6*25mm Screw x7

Step 9

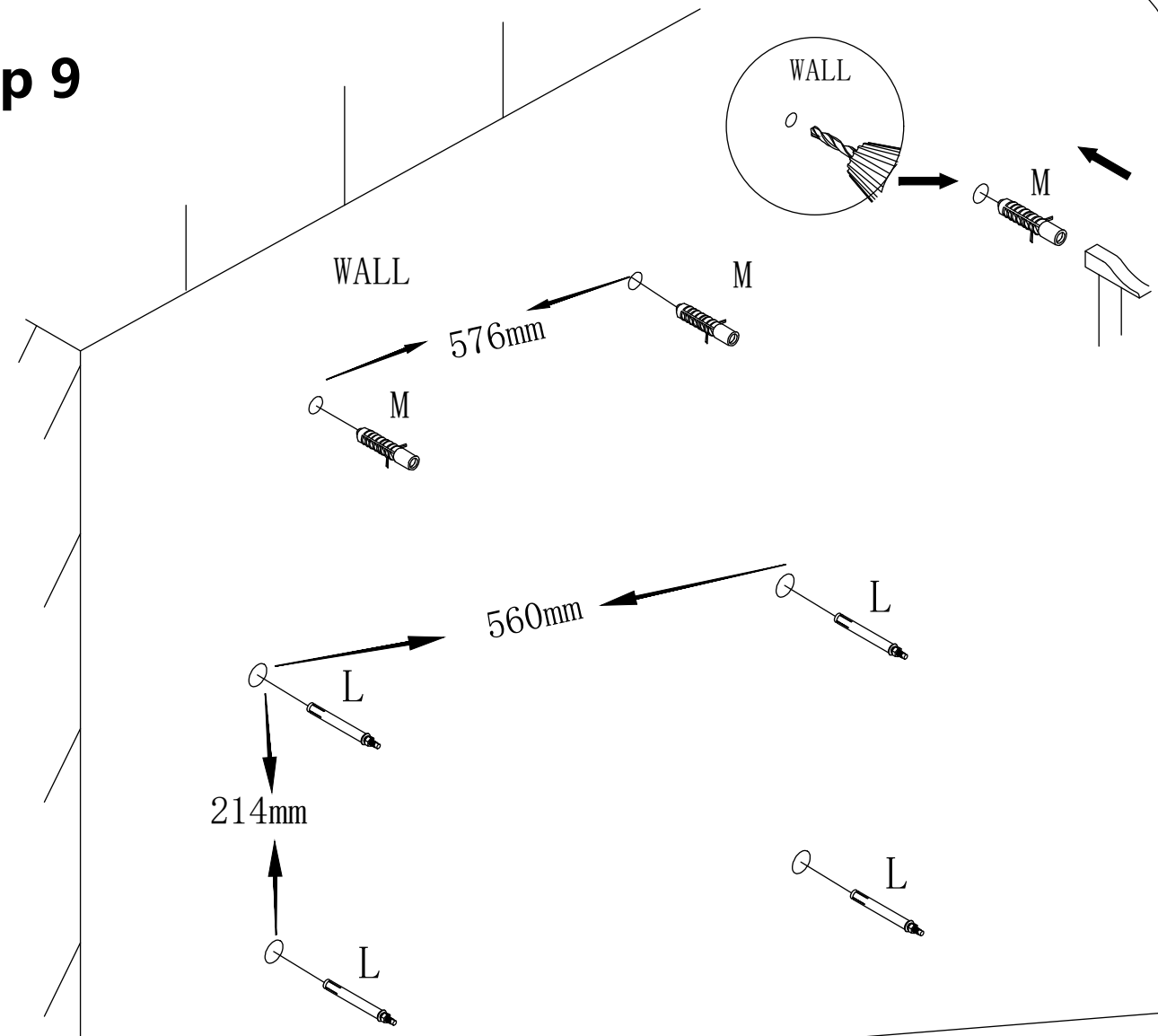

Note: The height from the ground to the cabinet pull rod is not fixed and can be adjusted by the customer.

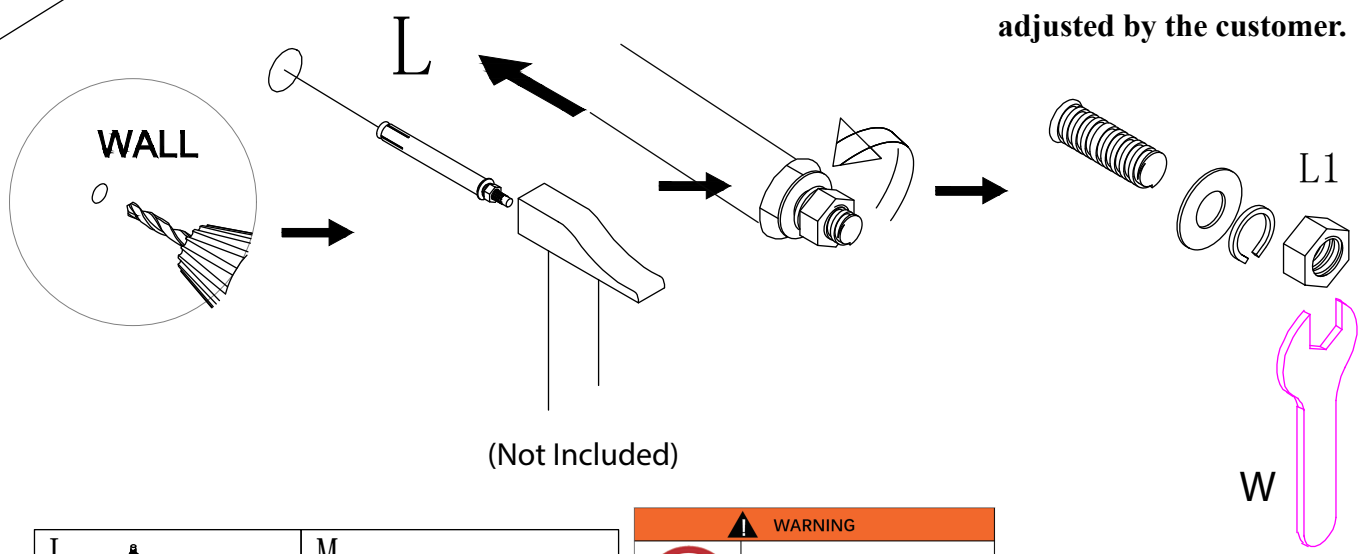

(Not Included)

L	M
Expansion screws x4	Anti tipping screw x2

WARNING

CSU

This product is NOT a Clothing Storage Unit (CSU).
DO NOT use it for clothing storage.
Improper use may cause furniture tipover.

Step 10

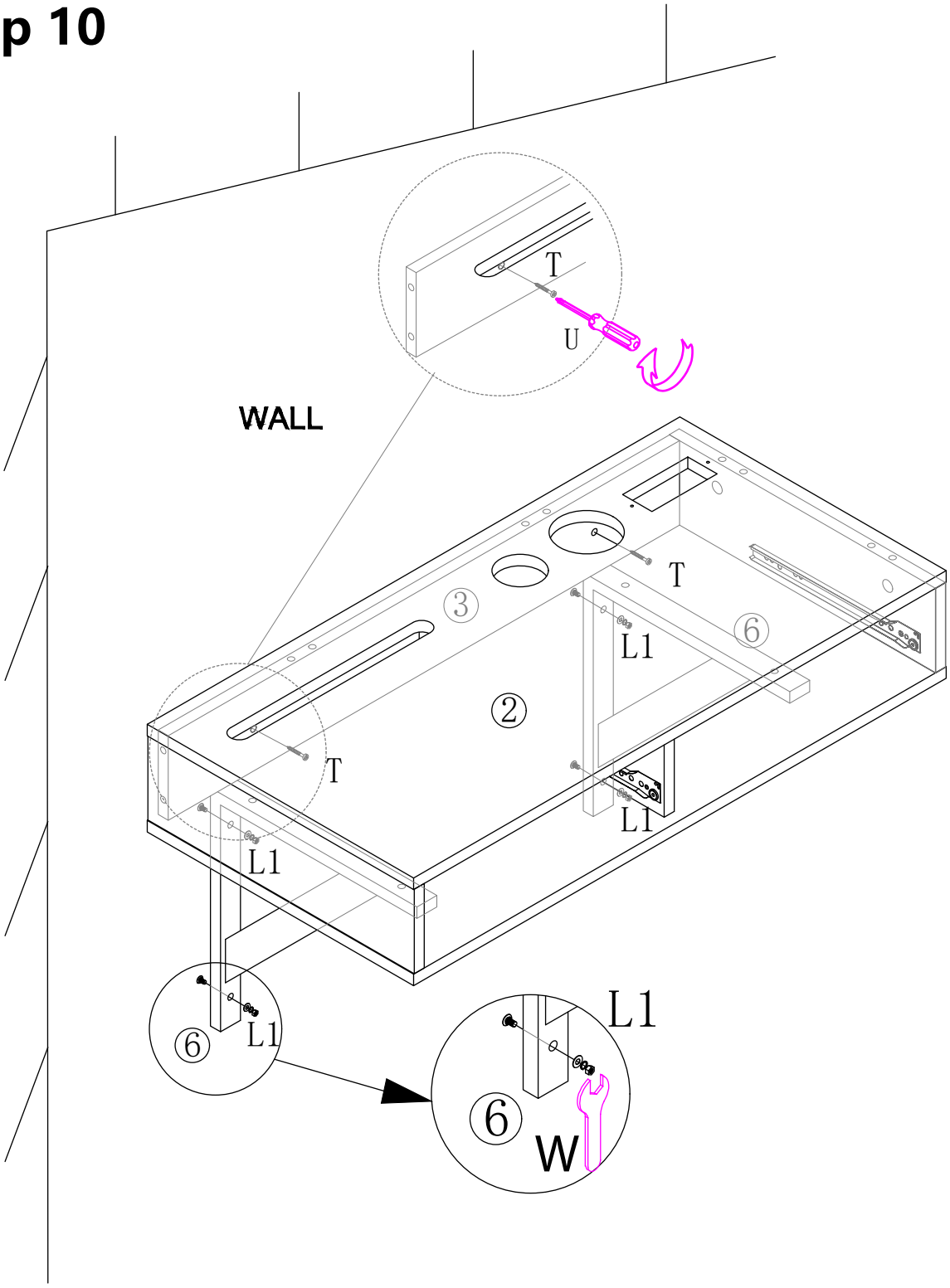

L1 Expansion screws x4	T 5*40mm x2

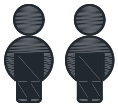

Be careful! At least two people are required

Step 11

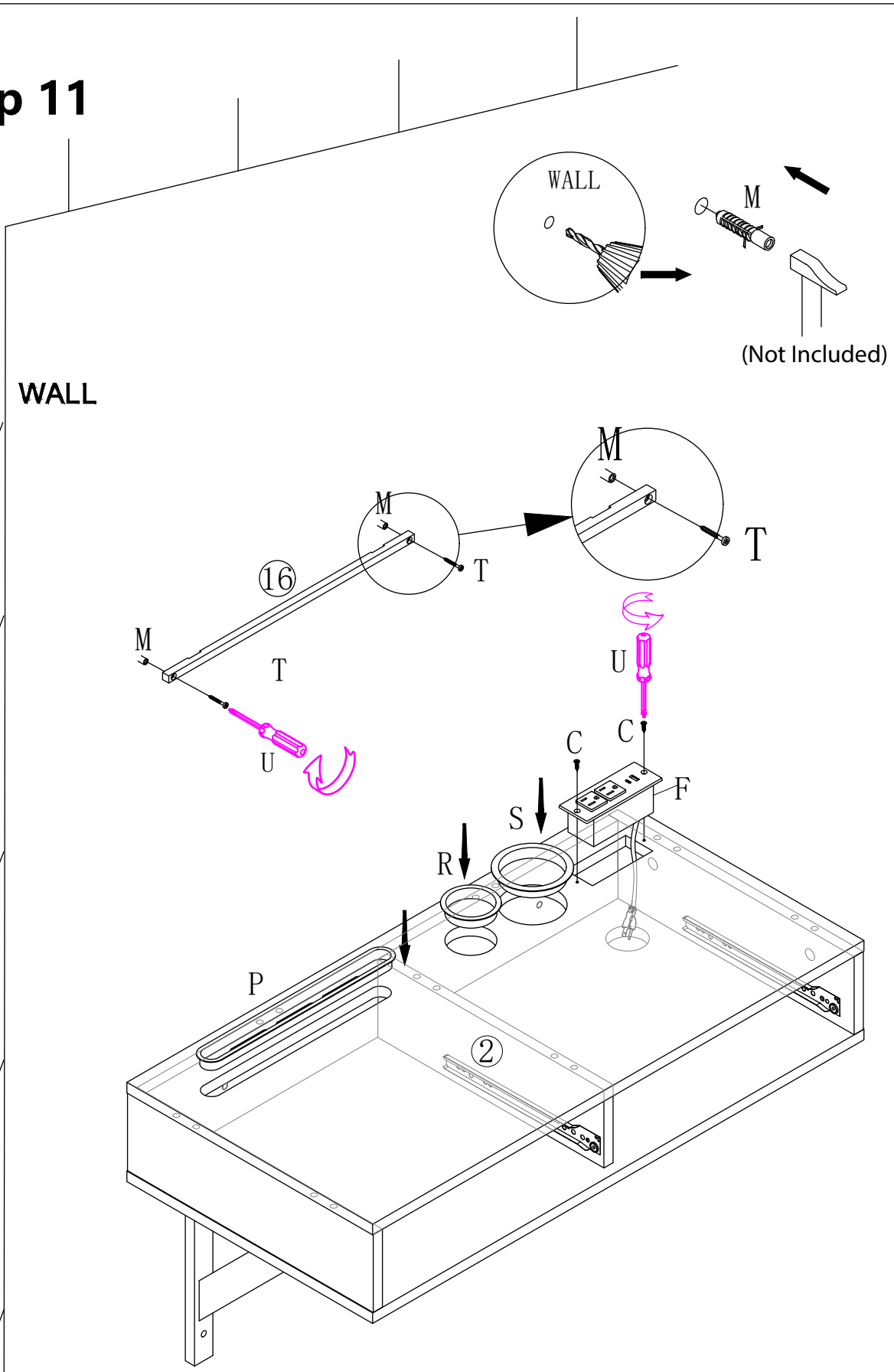

C	F	P	R	S	M	T
3.5*14mm x2	Socket x1	x1	x1	x1	x2	5*40mm x2

Step 12

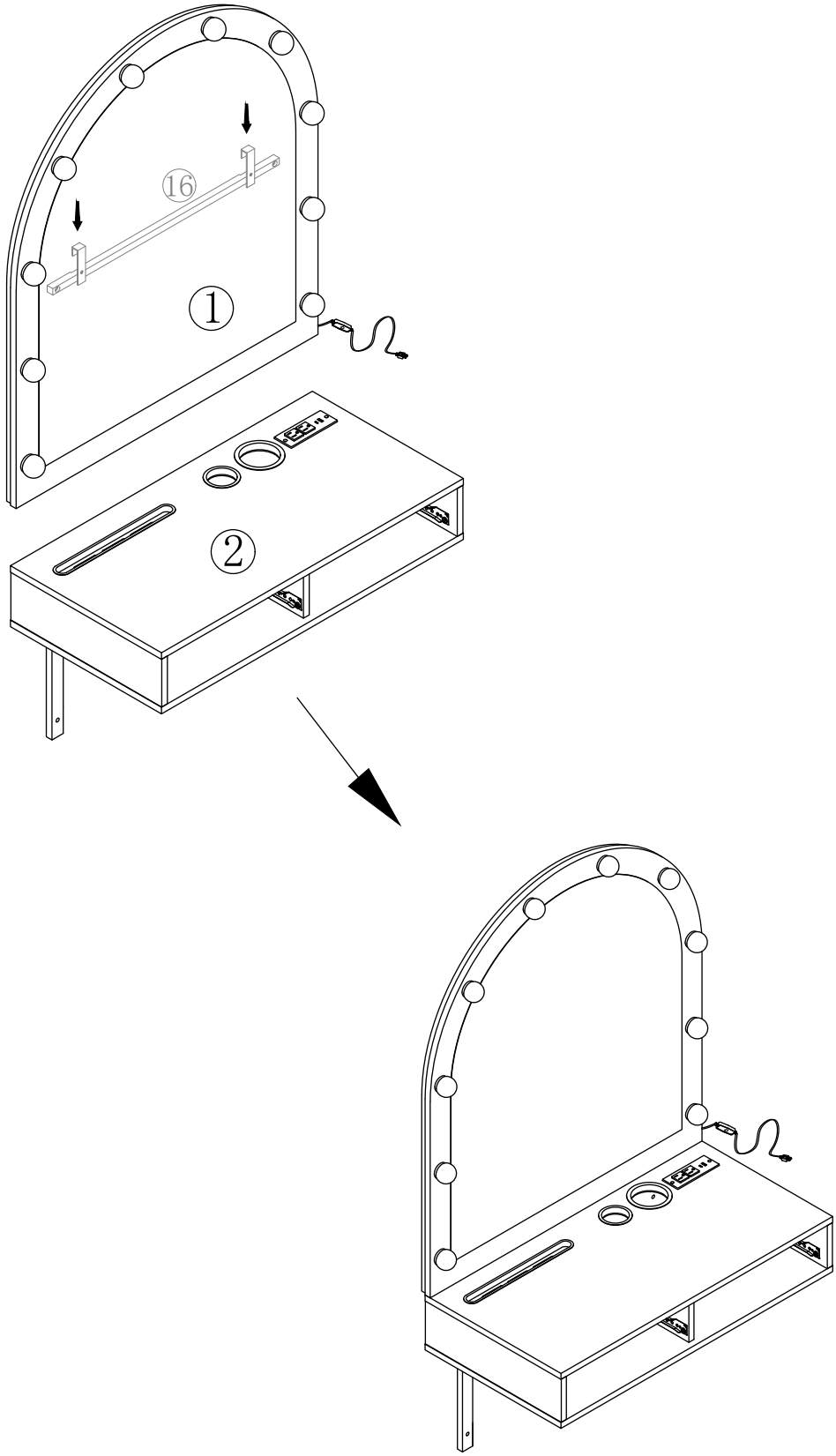

Step 13

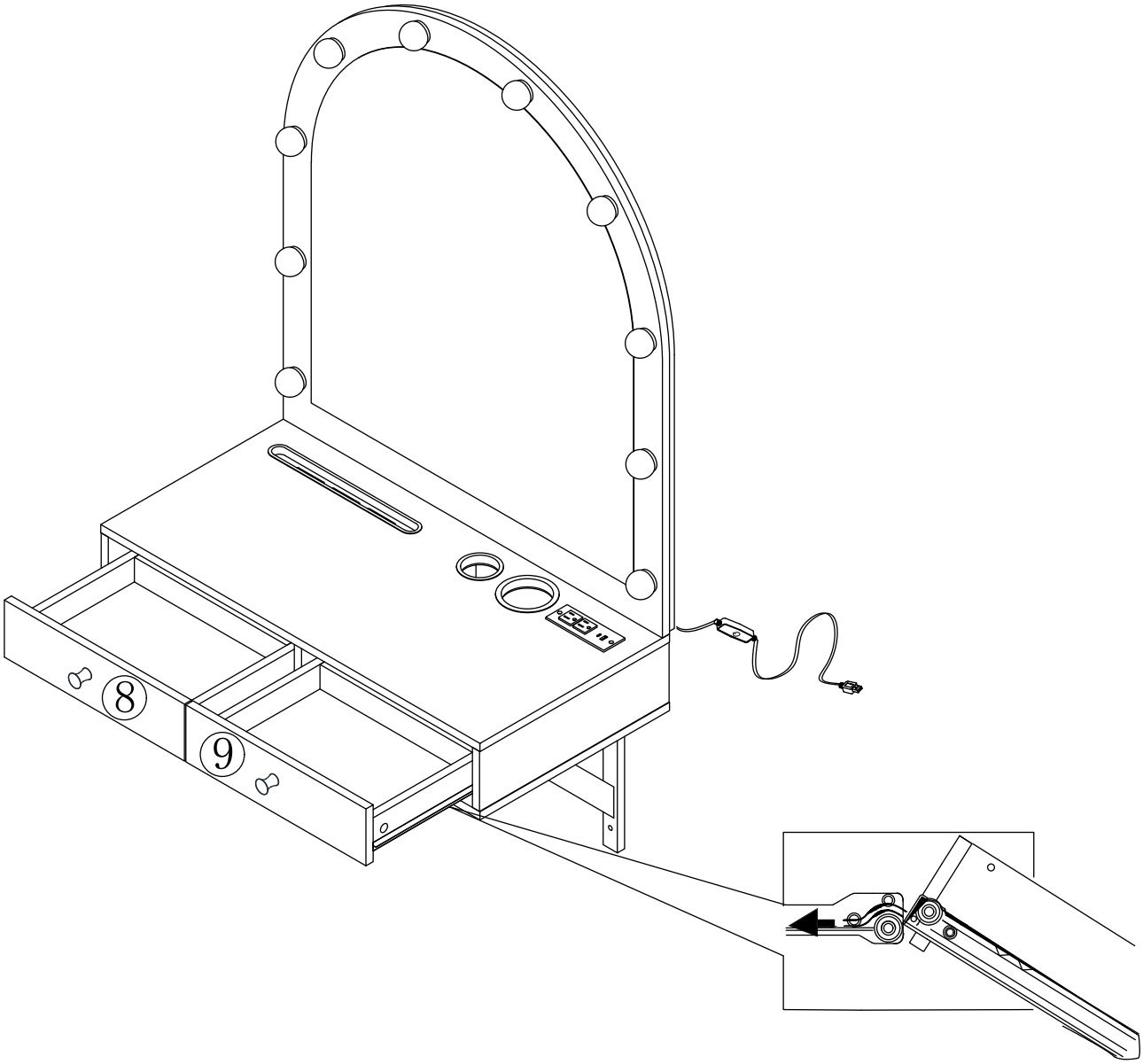
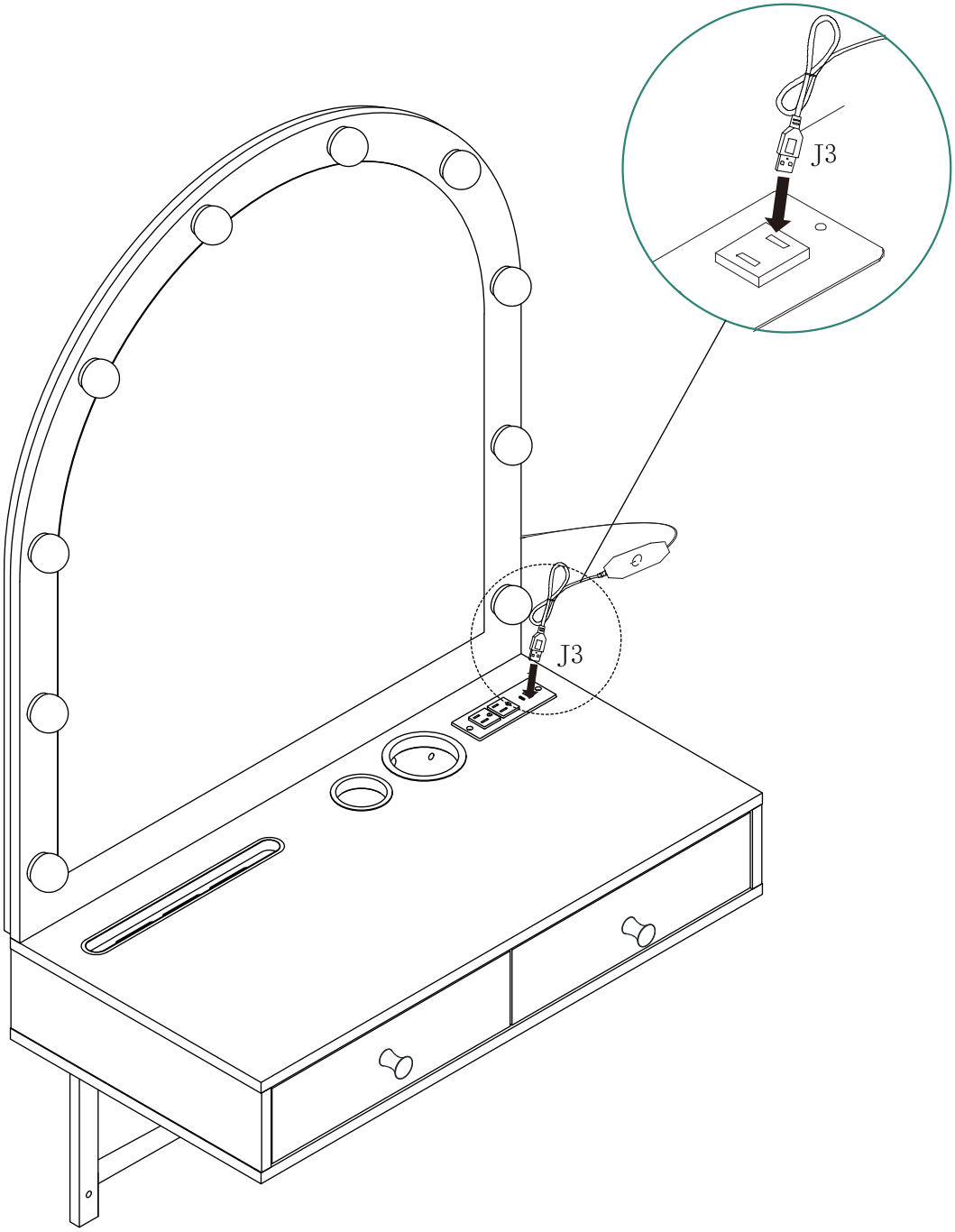
Complete