ASSEMBLY INSTRUCTIONS
BATH VANITY-CABINET

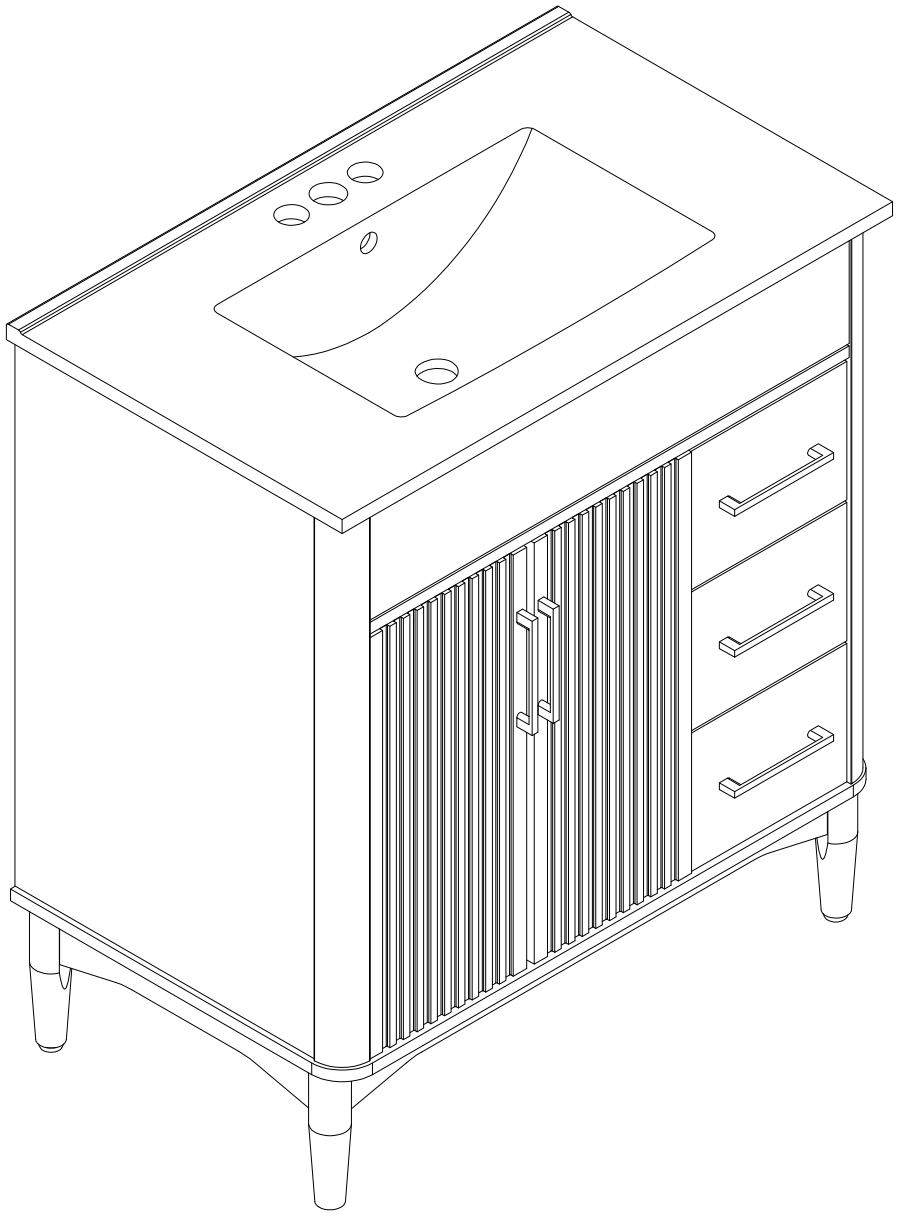

Thank you for purchasing this quality product. Be sure to check all packing material carefully for small parts which may have come loose inside the carton during shipment. Separate, identify and count all parts and hardware.
Compare with the parts list to be sure all parts are present.
DO NOT TIGHTEN SCREWS UNTIL COMPLETELY ASSEMBLED

* Use of power tool to assemble this product will invalidate any claim and damage this product making unsafe !!!
* Please assemble on a clean soft surface to avoid damage.



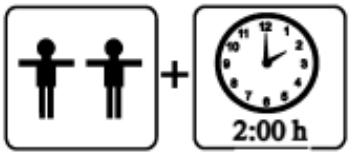

Tools Required


(Not included)


(Not included)

IMPORTANT:

PLEASE READ INSTRUCTION BEFORE STARTING THE ASSEMBLY

PLEASE DO NOT RETURN TO STORE



Please do not return this product to the retailer!!
We are able to assist you in ANY way

If you find that you have any trouble with assembly or missing or damaged parts please contact the seller.

Before Installation

Important – Please read these instructions fully before starting assembly

Thank you for purchasing this quality product. Be sure to check all packing materials carefully for small parts, which may have come loose inside the carton during shipment. Identify and count all items according to the PARTS LIST and/or HARDWARE LIST shown below. Check you have all the components and tools listed on the following pages.

- We recommend that you assemble this product with the assistance of another person; this will make the assembly easier, and will help eliminate damage to the product or injury to persons during assembly.
- Please do not over tighten screws or bolts until the assembly is completed.
- Keep children and animal away from the work area, small parts could choke if swallowed.
- Please put all parts on a non-abrasive floor before assembly,and follow the assembly steps to assemble your newly purchased product correctly and efficently.

Cam Lock Assembly Instructions

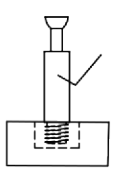

Diagram A

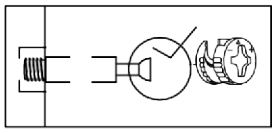

Insert Cam Bolt into hole as shown in diagram A.

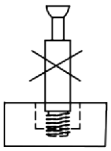

Diagram B

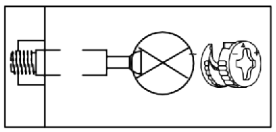

Make sure not to insert the Cam Bolt:
Too deep as shown in figure B as this will cause the Cam Lock to be misaligned and unable to interlock properly.

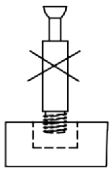

Diagram C

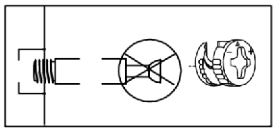

Also avoid inserting the Cam Bolt too close to the surface of the hole as shown in figure C, as this will cause the Cam Lock to be too loose, and not interlock properly.

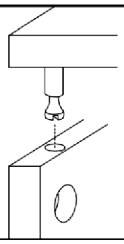

Connect the panels together.

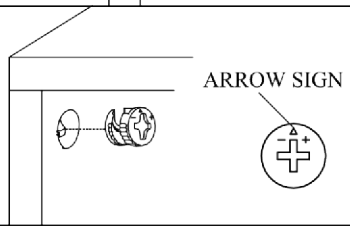

Insert the Cam Lock so the side opening fits over the head of the Cam Bolt.

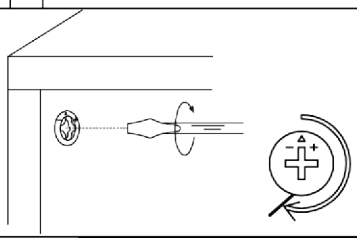

To tighten the Cam Lock, turn it clockwise on half a turn with a flat screwdriver.
**Do not use an automatic screwdriver as it may bend or break if too much power is imposed.*

Detail View

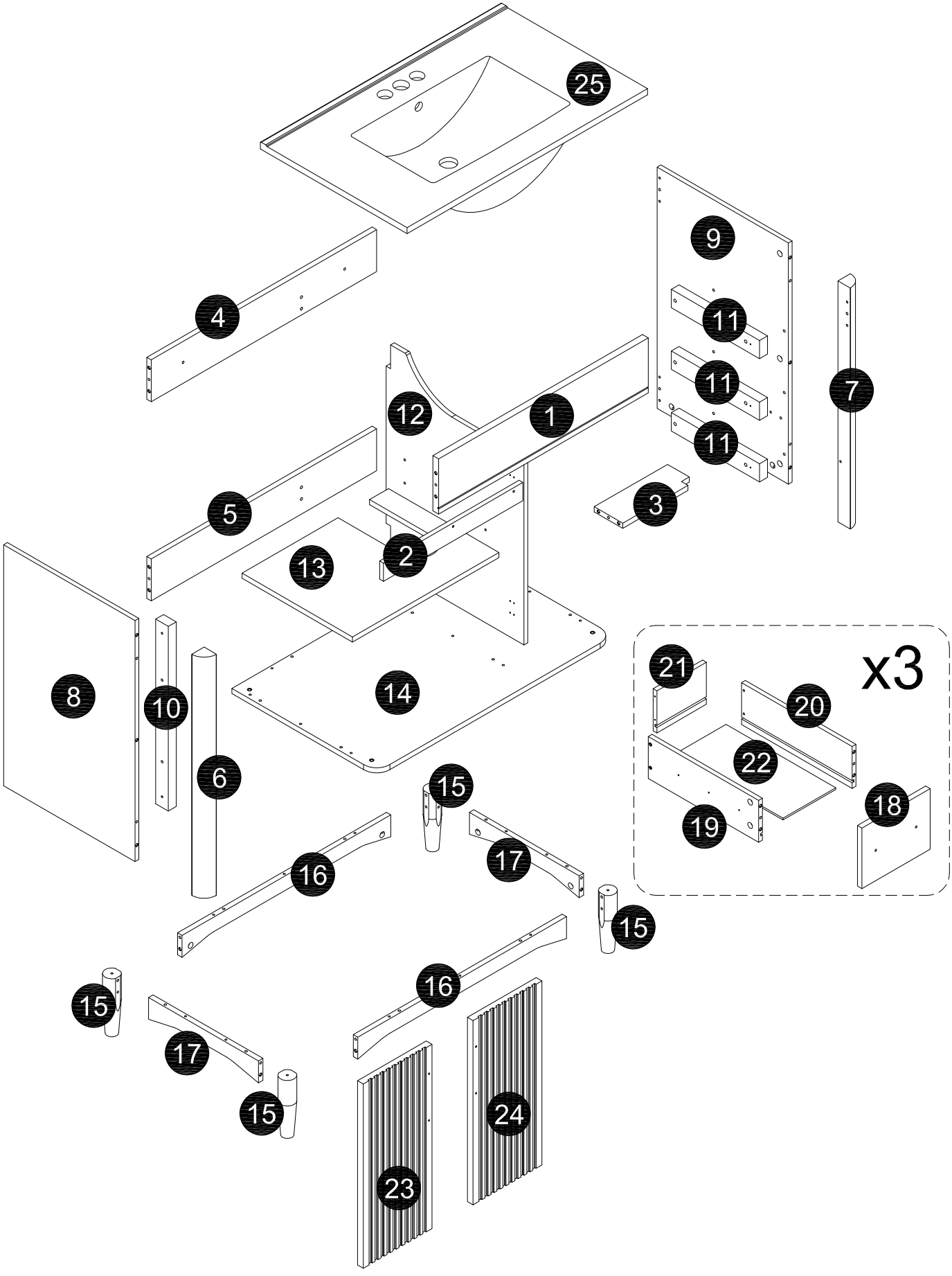

Note:Don't tighten all screws during installation.

Part Lists

1 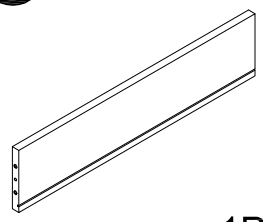 1PC	2 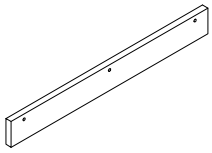 1PC	3 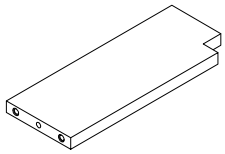 1PC	4 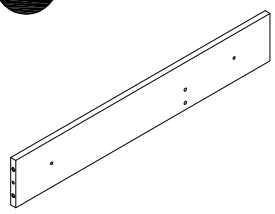 1PC
5 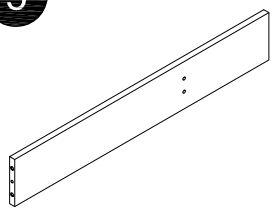 1PC	6  1PC	7  1PC	8 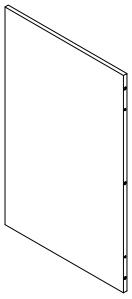 1PC
9 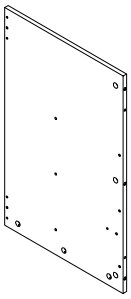 1PC	10  1PC	11 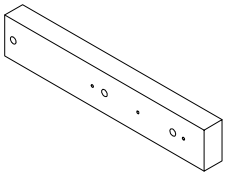 3PCS	12 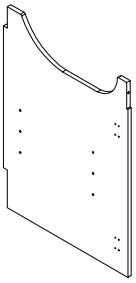 1PC
13 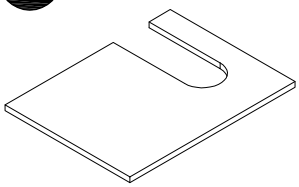 1PC	14 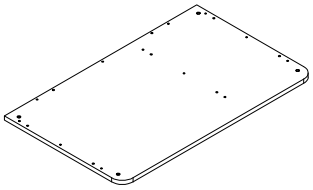 1PC	15 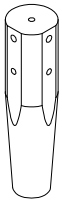 4PCS	16 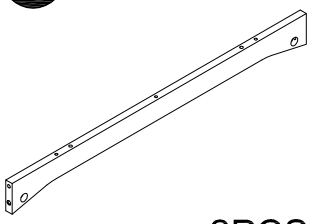 2PCS
17 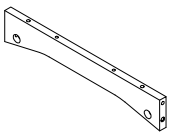 2PCS	18 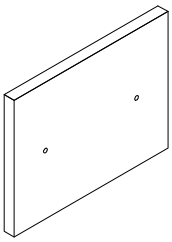 3PCS	19 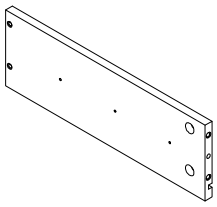 3PCS	20 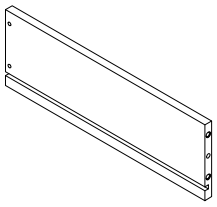 3PCS
21 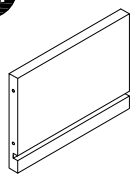 3PCS	22 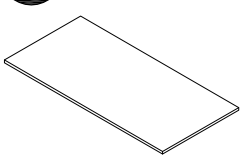 3PCS	23 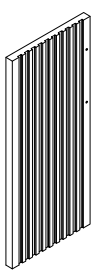 1PC	24 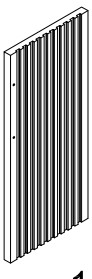 1PC	25 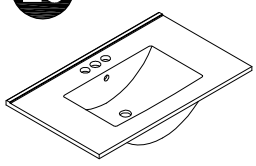 1PC

Hardware Lists

A	X54+2
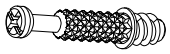	
Ø6x34mm	

B	X54+2
	
Ø15x9.5mm	

C	X51+2
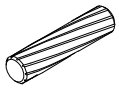	
Ø6x30mm	

D	X4
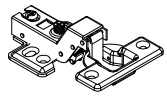	
Ø35mm	

E	X24+1
	
Ø8x12mm	

F	X8
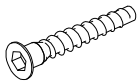	
Ø5x50mm	

G	X1
	
25*15*15*1mm	

H	X5
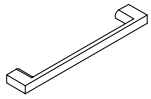	

I	X10
	
5/32" x18mm	

J	X4
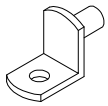	

K	X40+1
	
Ø4x10mm	

L	X22+1
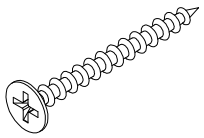	
Ø8*35mm	

M	X15
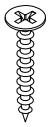	
Ø8*25mm	

N	X4
	
Ø1/4"*15mm	

O	X2
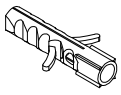	
Ø8*40mm	

P	X2
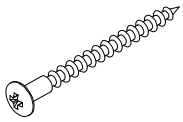	
Ø5x55mm	

Q	X1
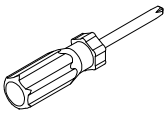	

R	X1
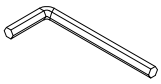	

S	X 3SET
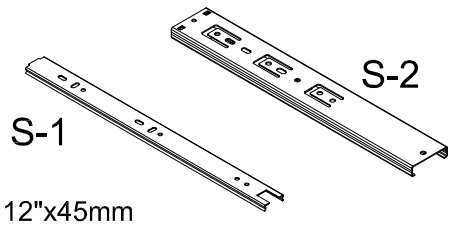	
Accessories	

Step 1

INSTALLATION STEPS

Press the plastic part in the indicated direction to separate drawer runner S-1 and S-2 before assembling.

REMARK:
Please grip the S-1 part while sliding the S-2 part

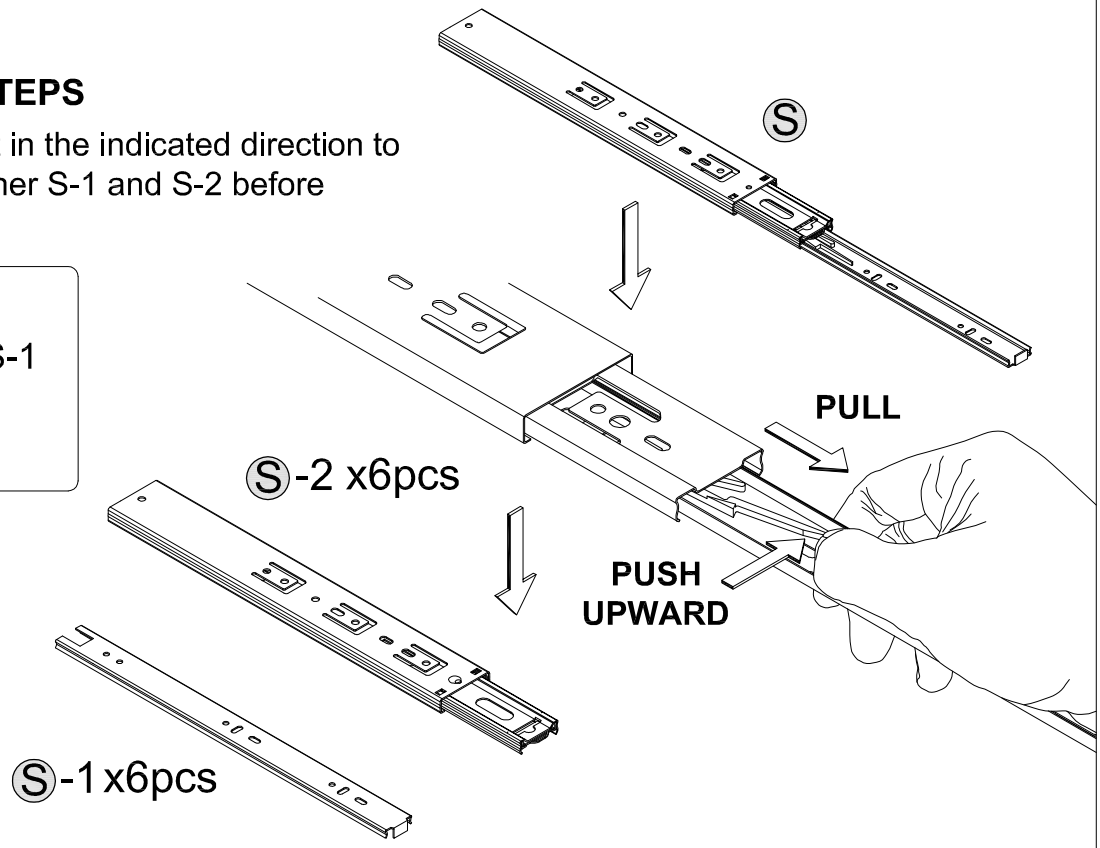

Step 2

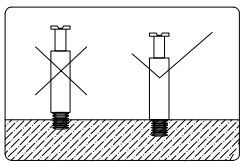

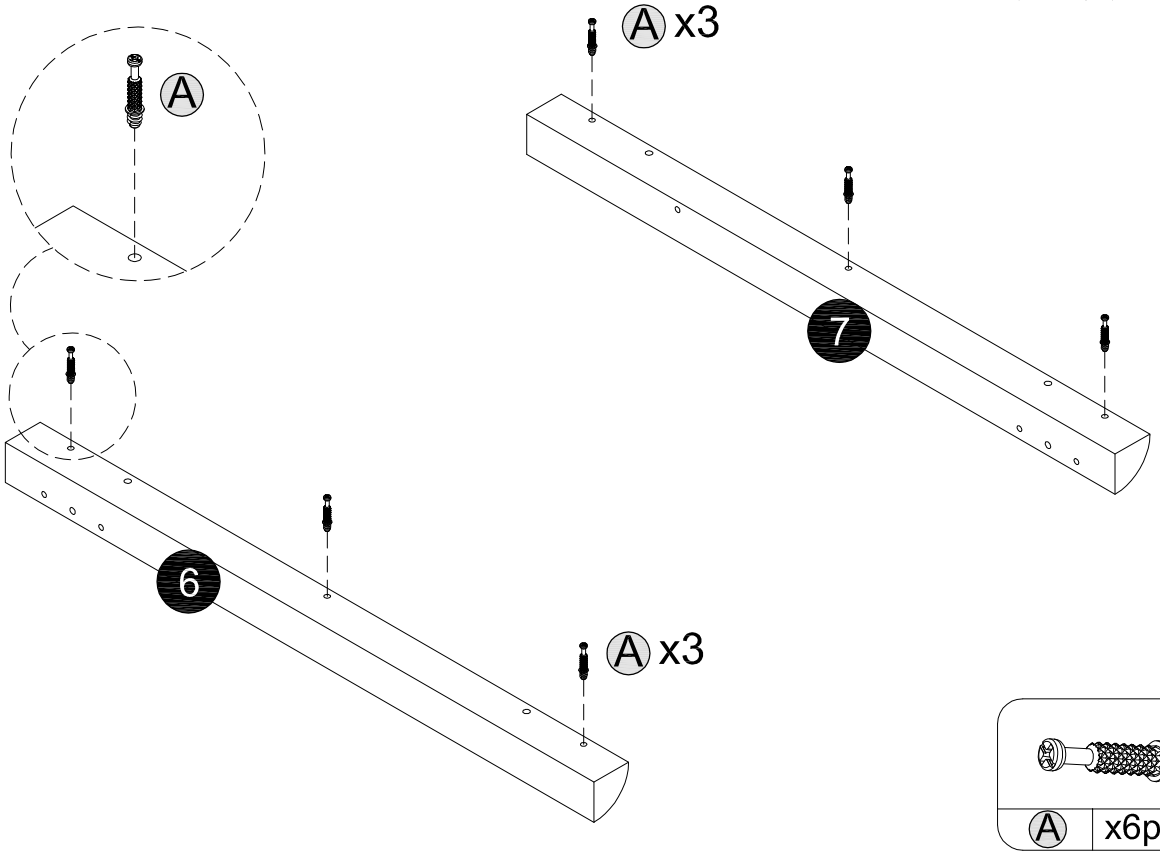

Step 3

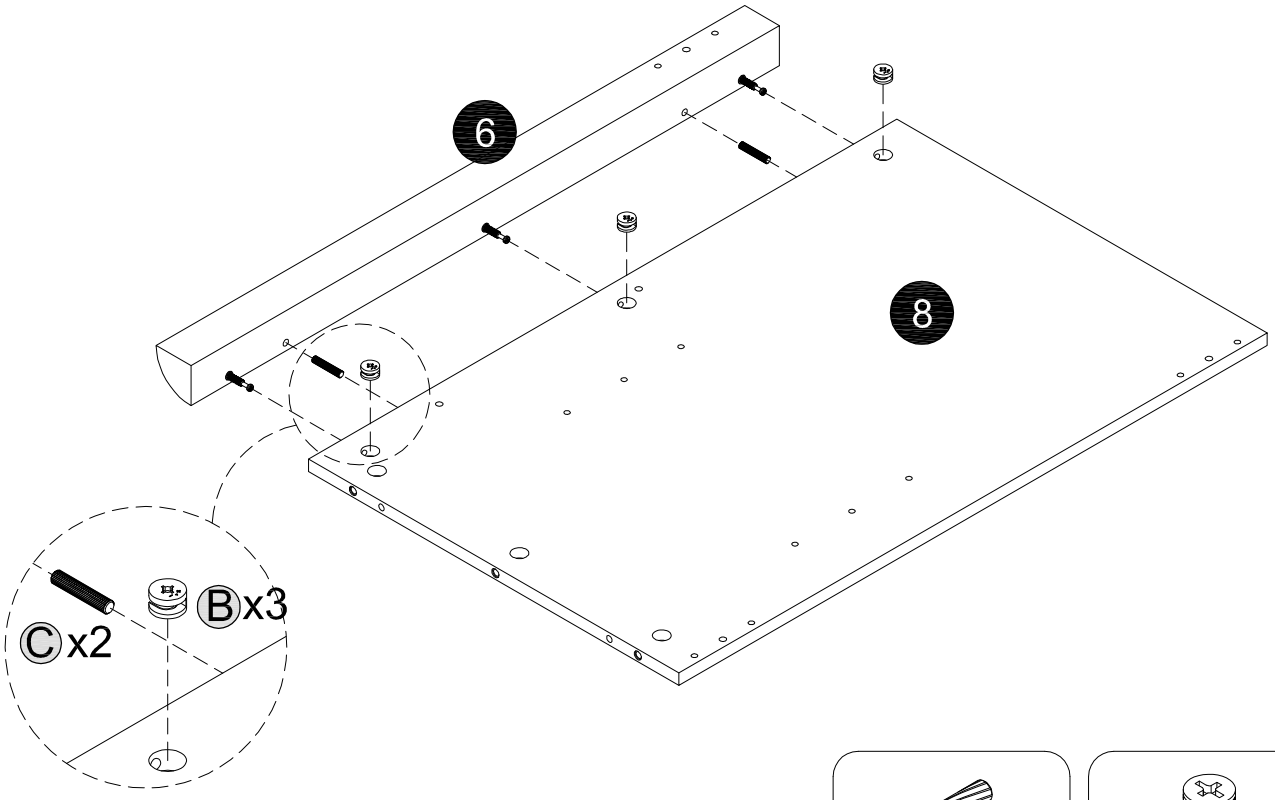

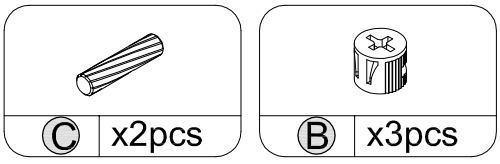

Step 4

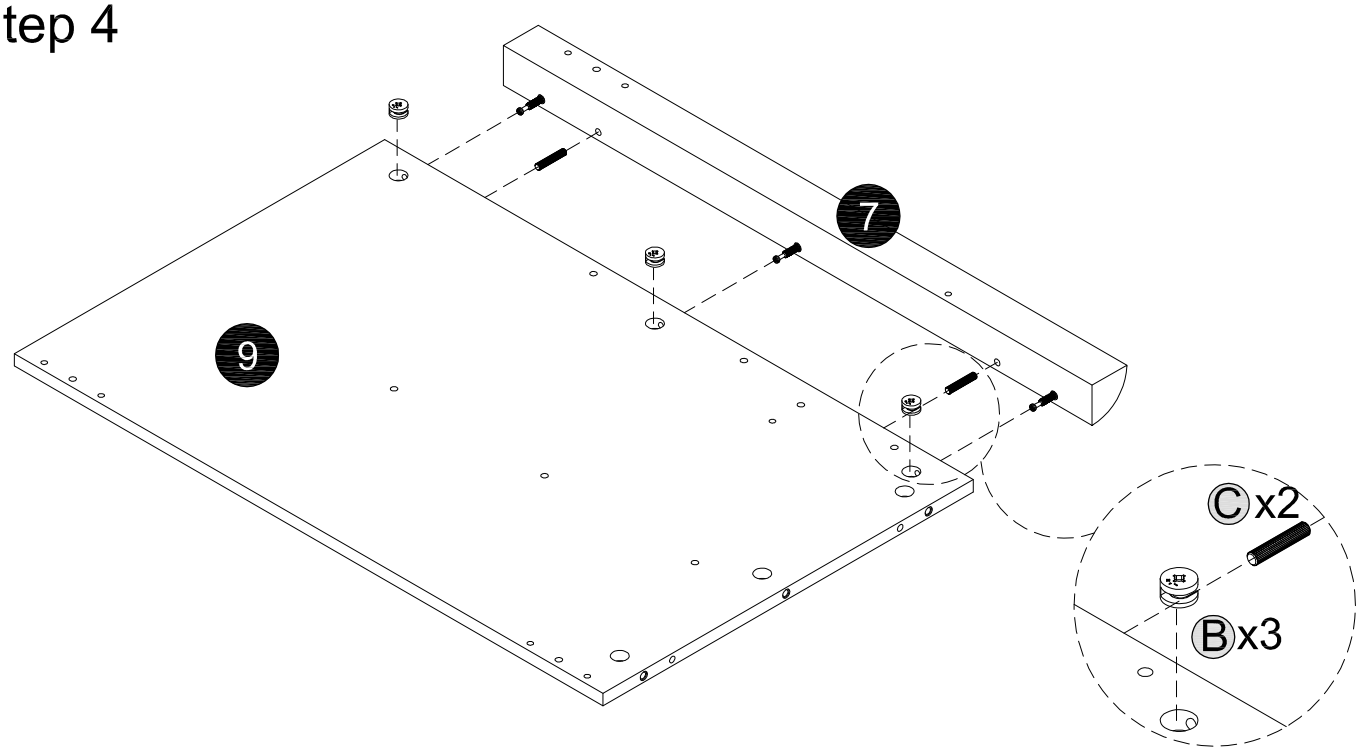

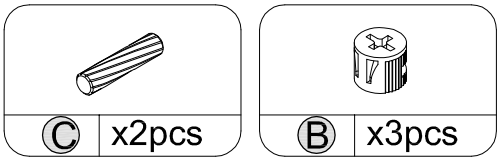

Step 5

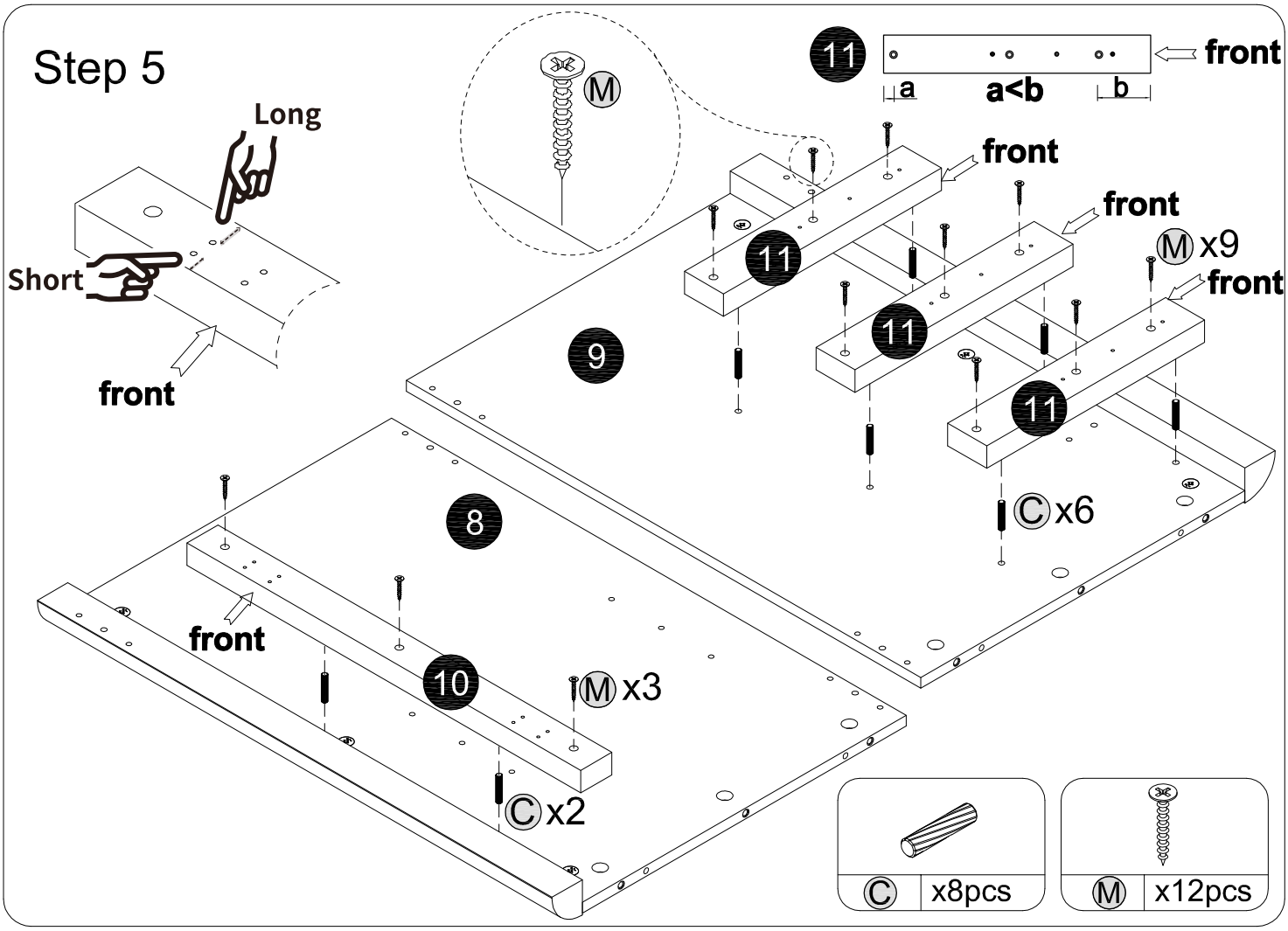

C	x8pcs
M	x12pcs

Step 6

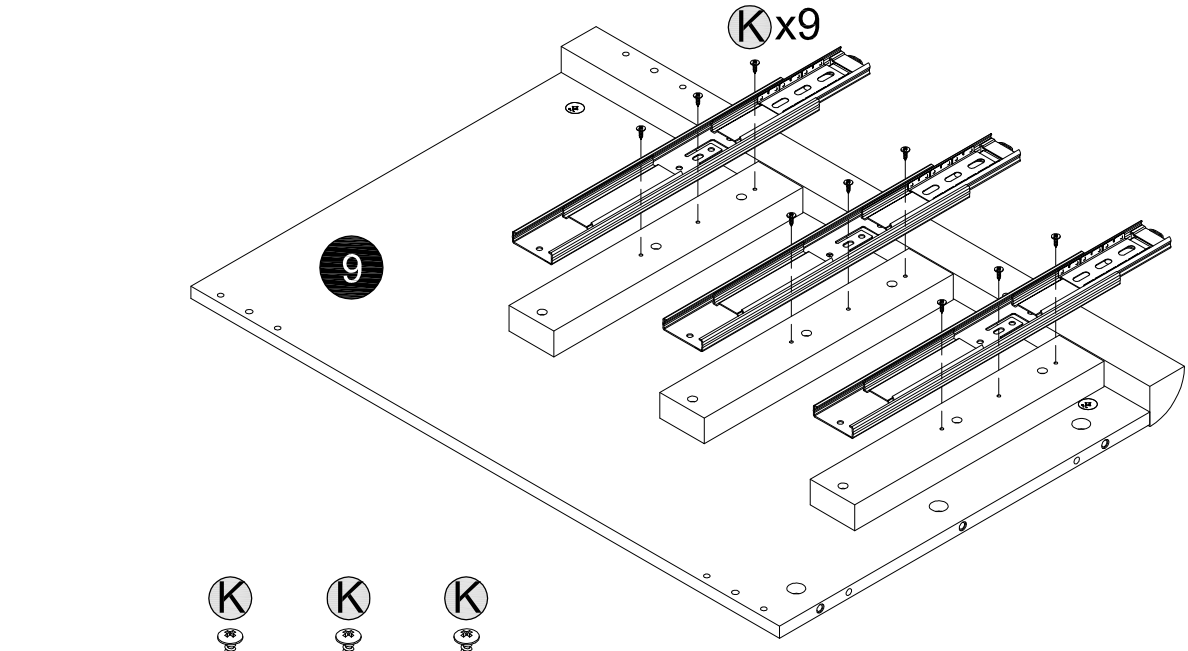

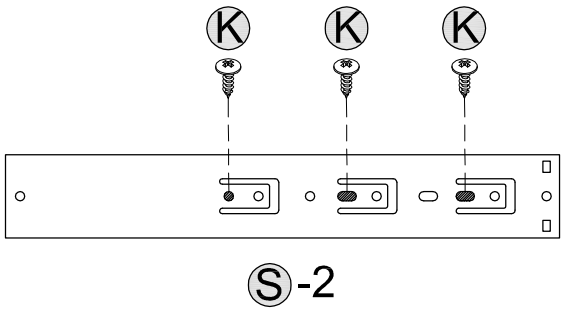

S -2	x3pcs
K	x9pcs

Step 7

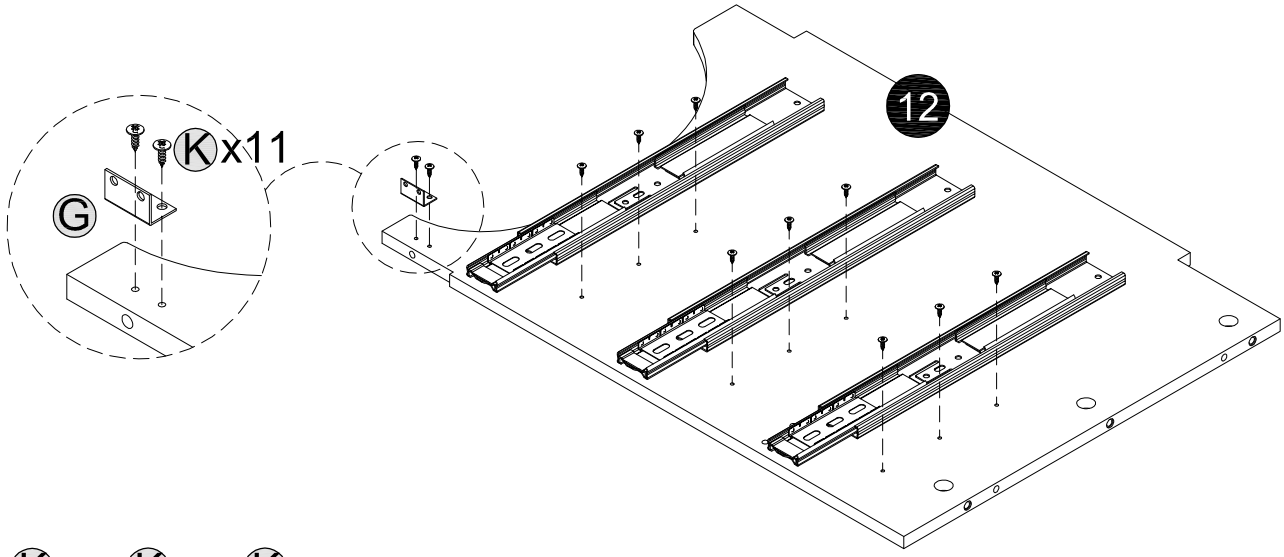

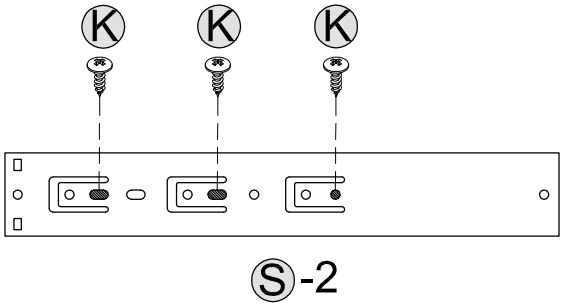

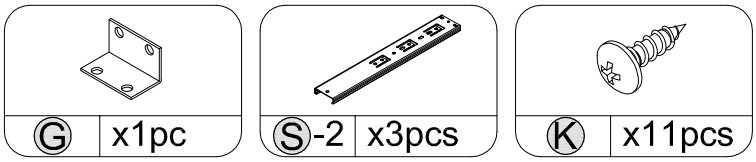

Step 8

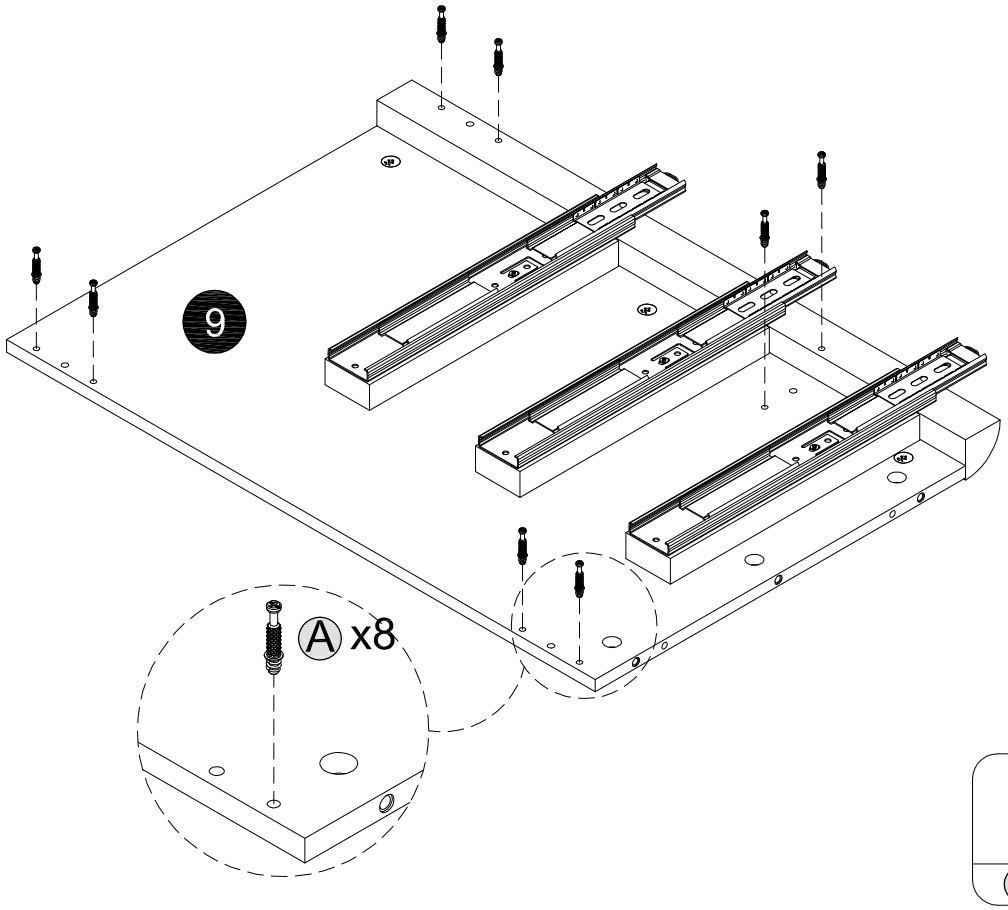

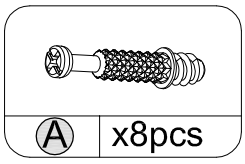

Step 9

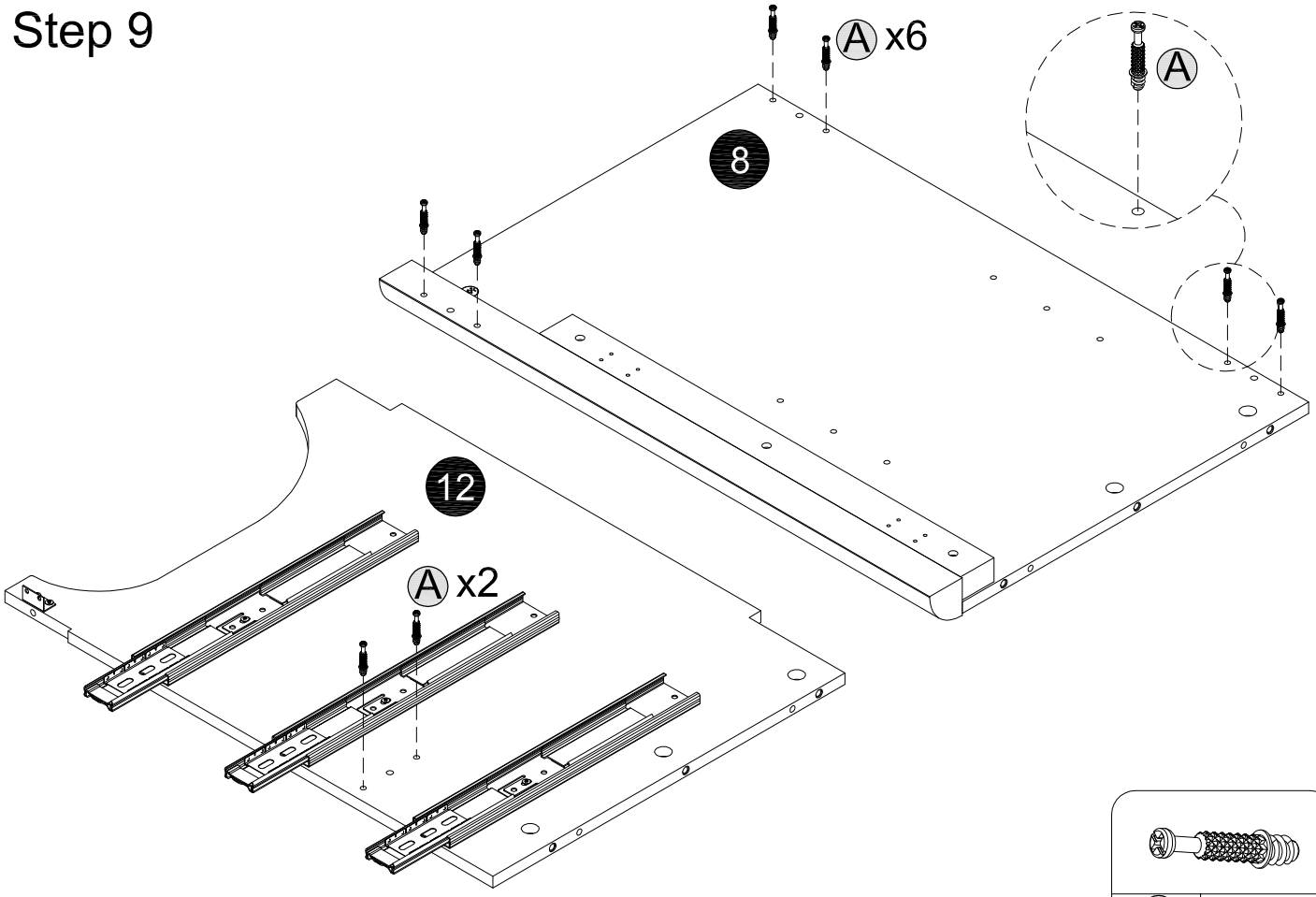

Step 10

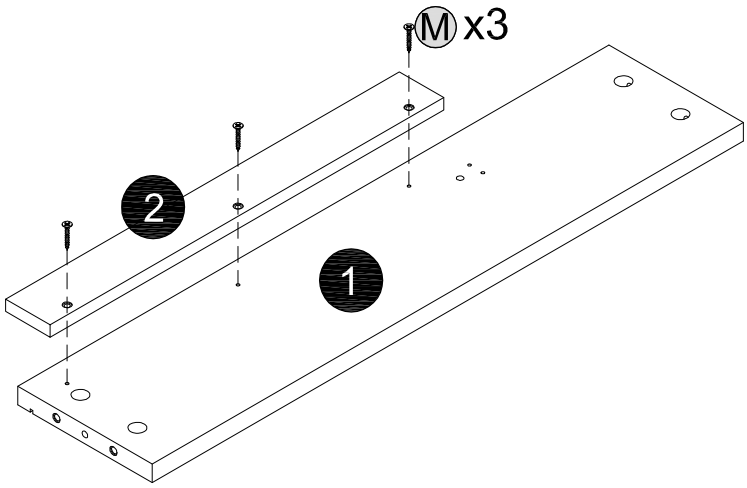

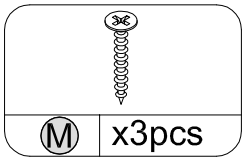

Step 11

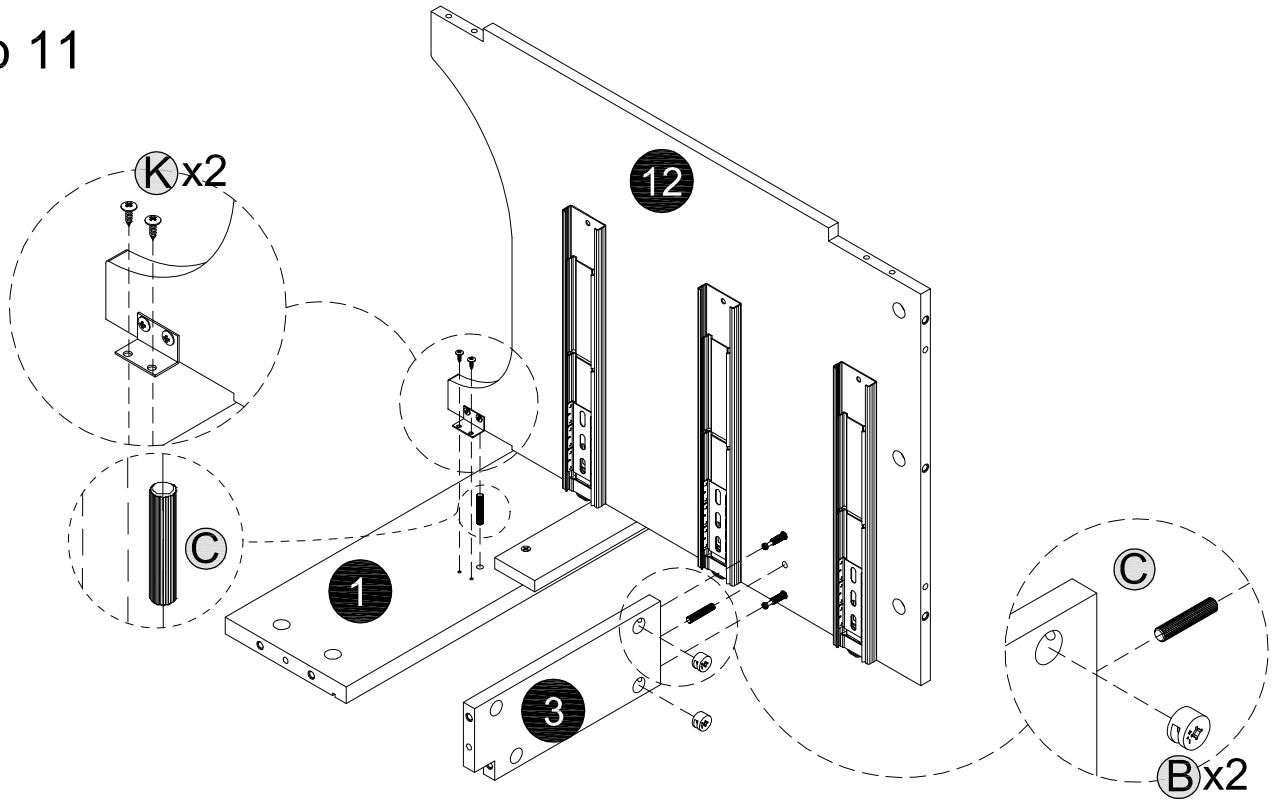

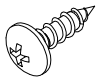 K	x2pcs
 C	x2pcs
 B	x2pcs

Step 12

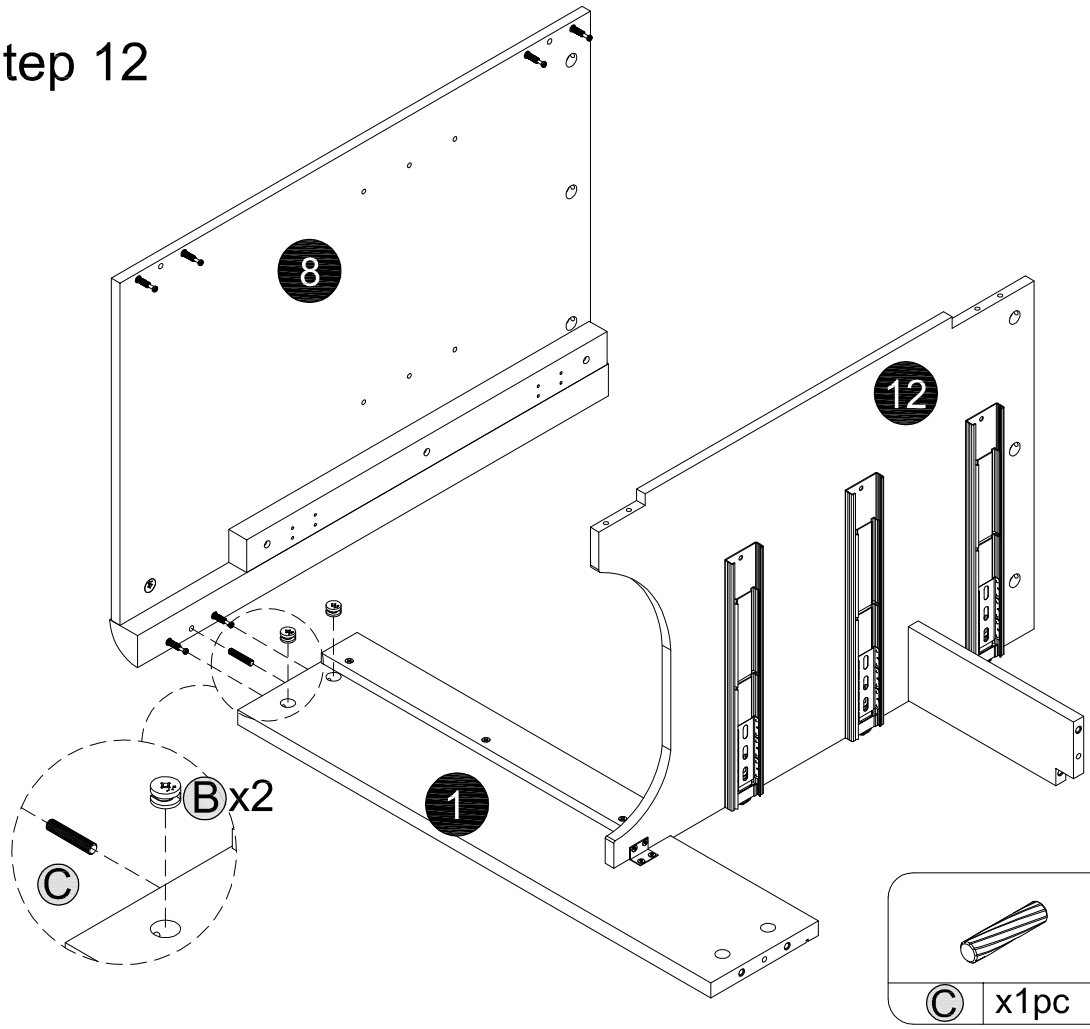

C	x1pc
 B	x2pcs

Step 13

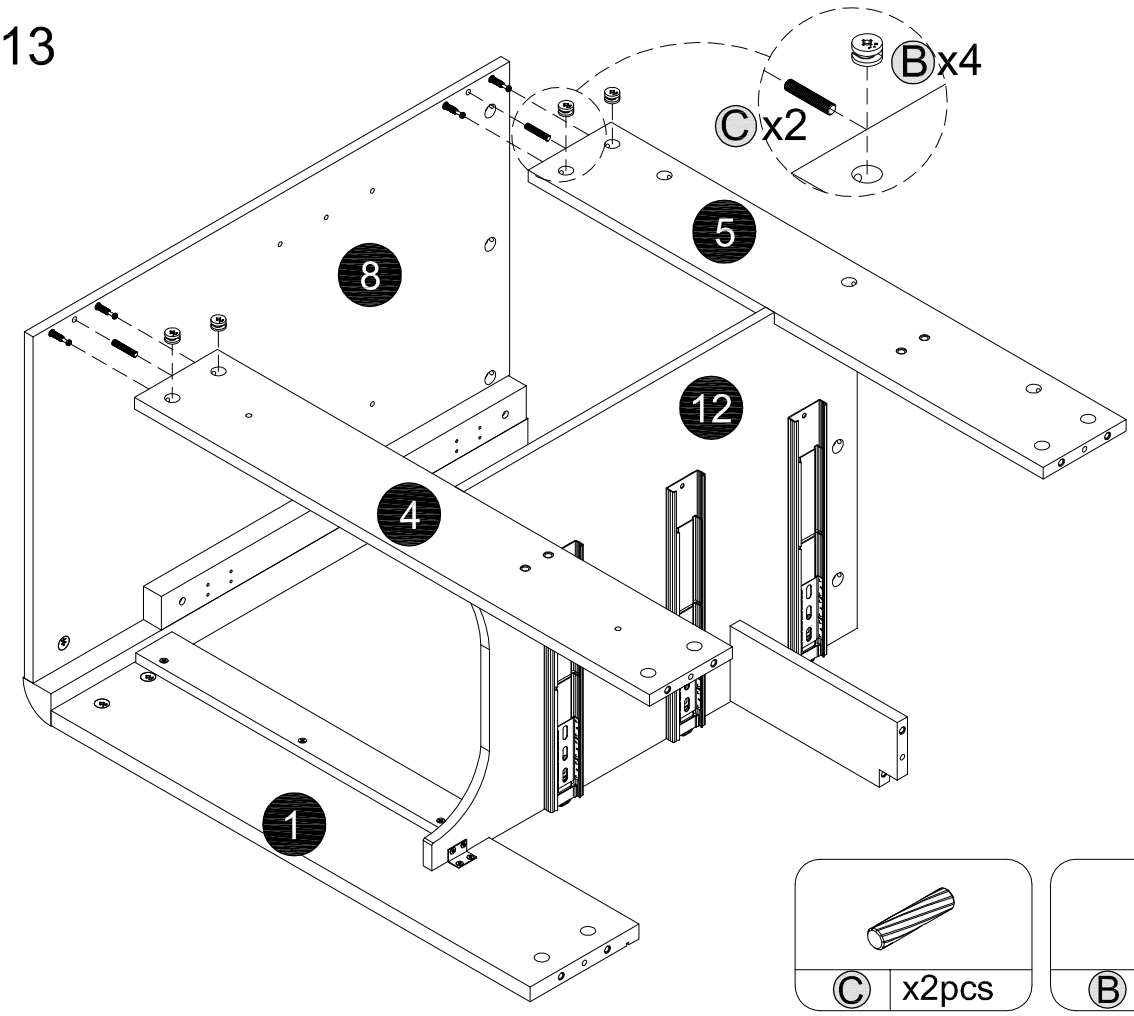

C	x2pcs
B	x4pcs

Step 14

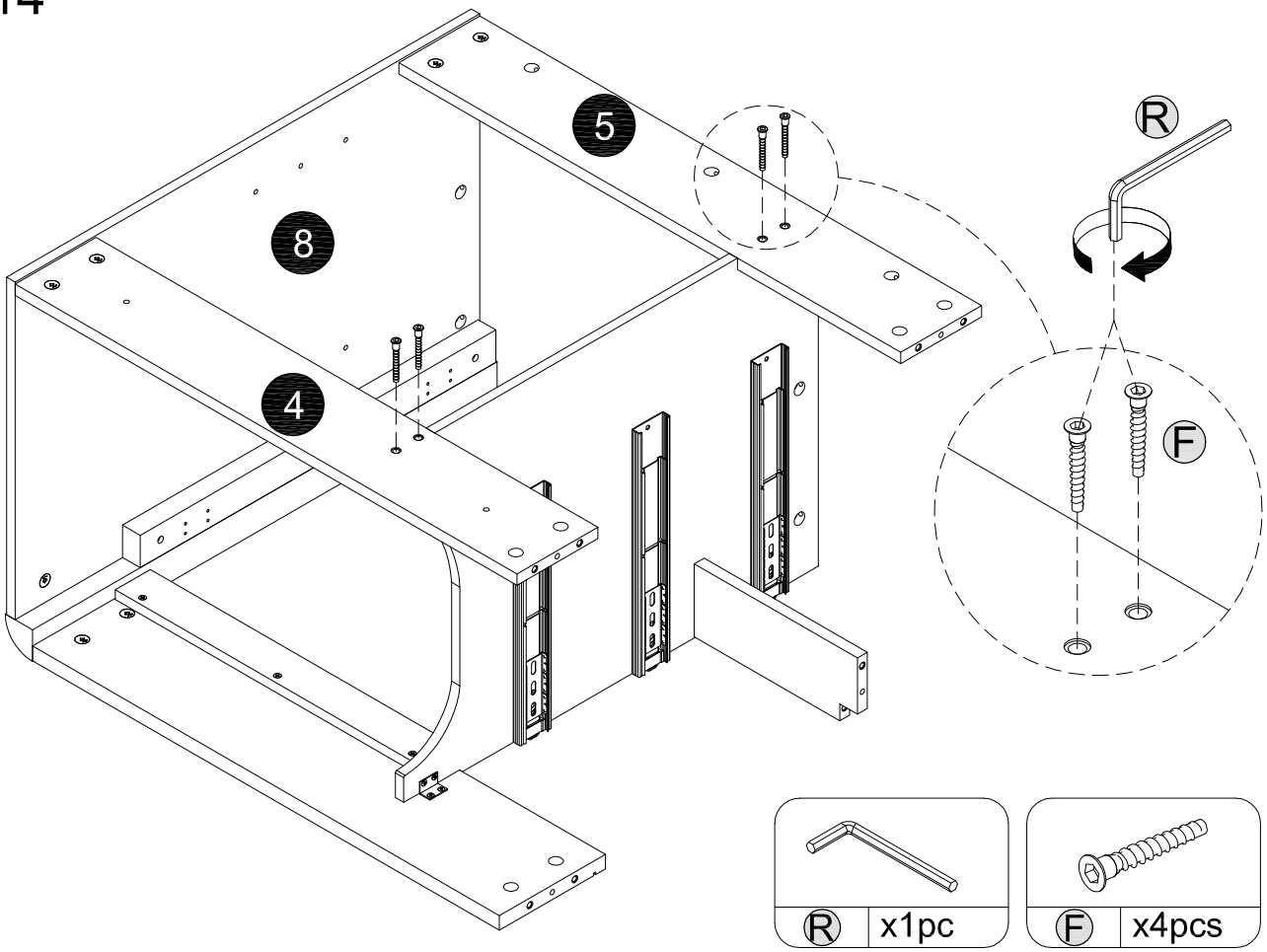

R	x1pc
F	x4pcs

Step 15

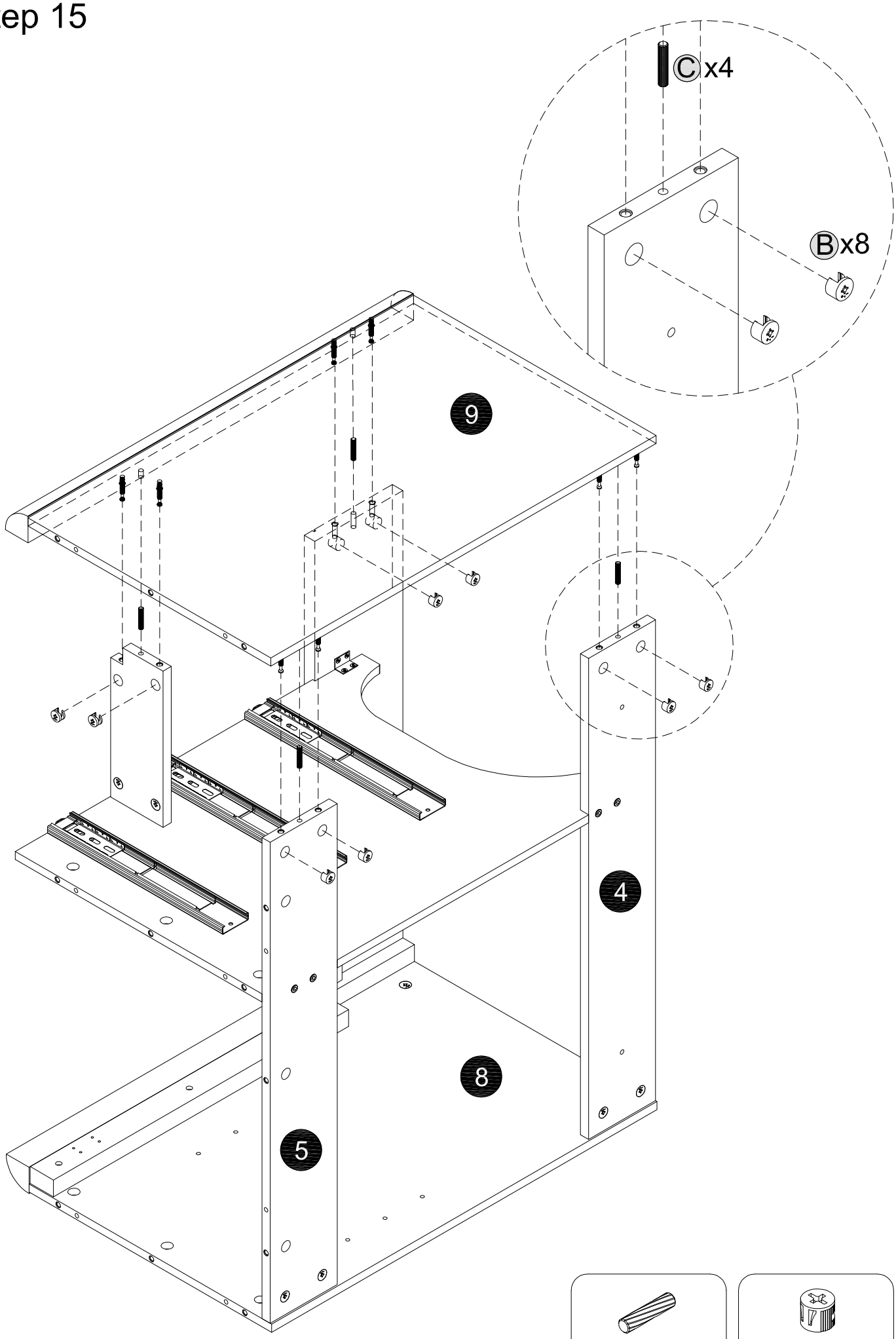

C	x4pcs
B	x8pcs

Step 16

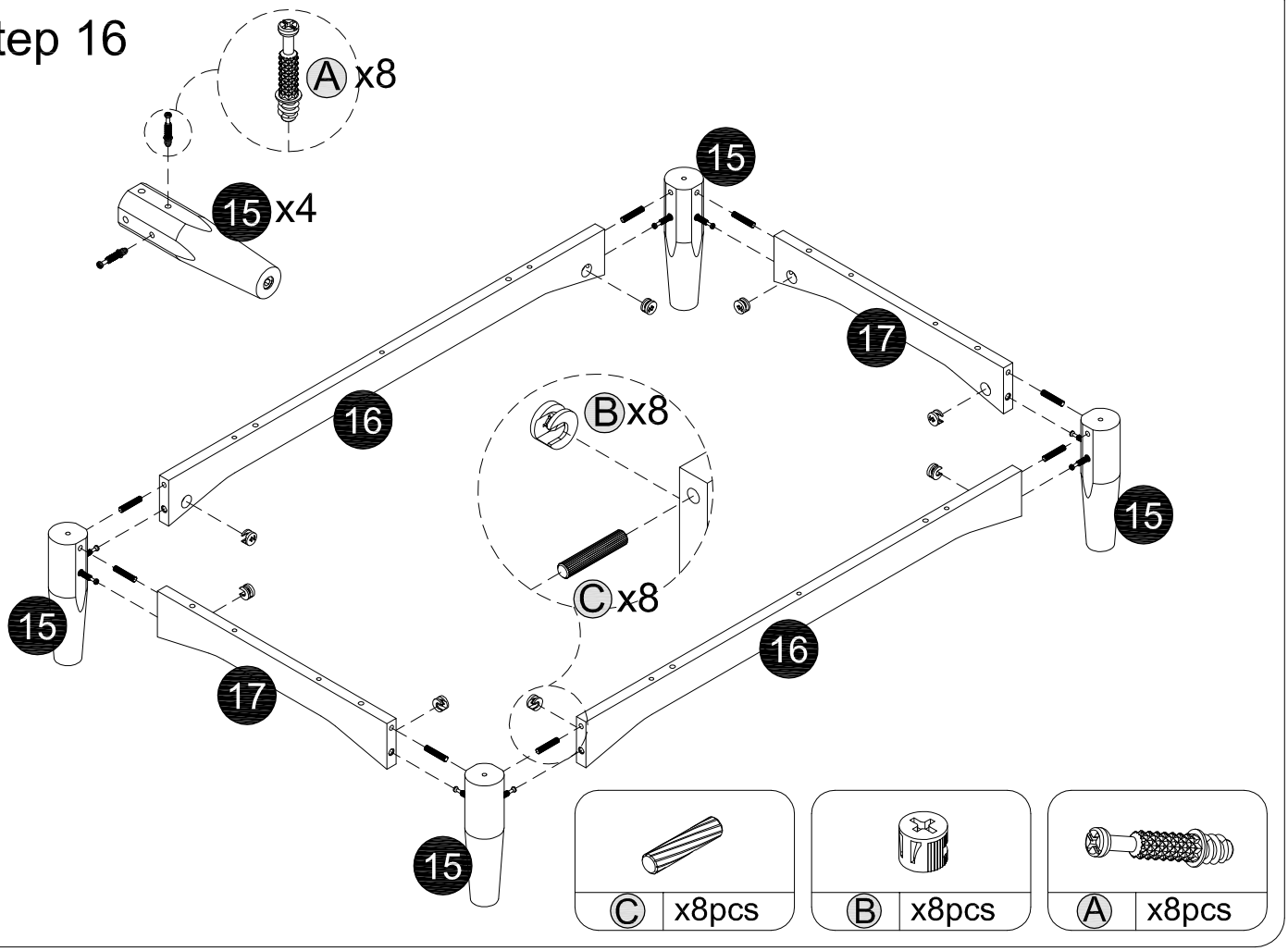

Step 17

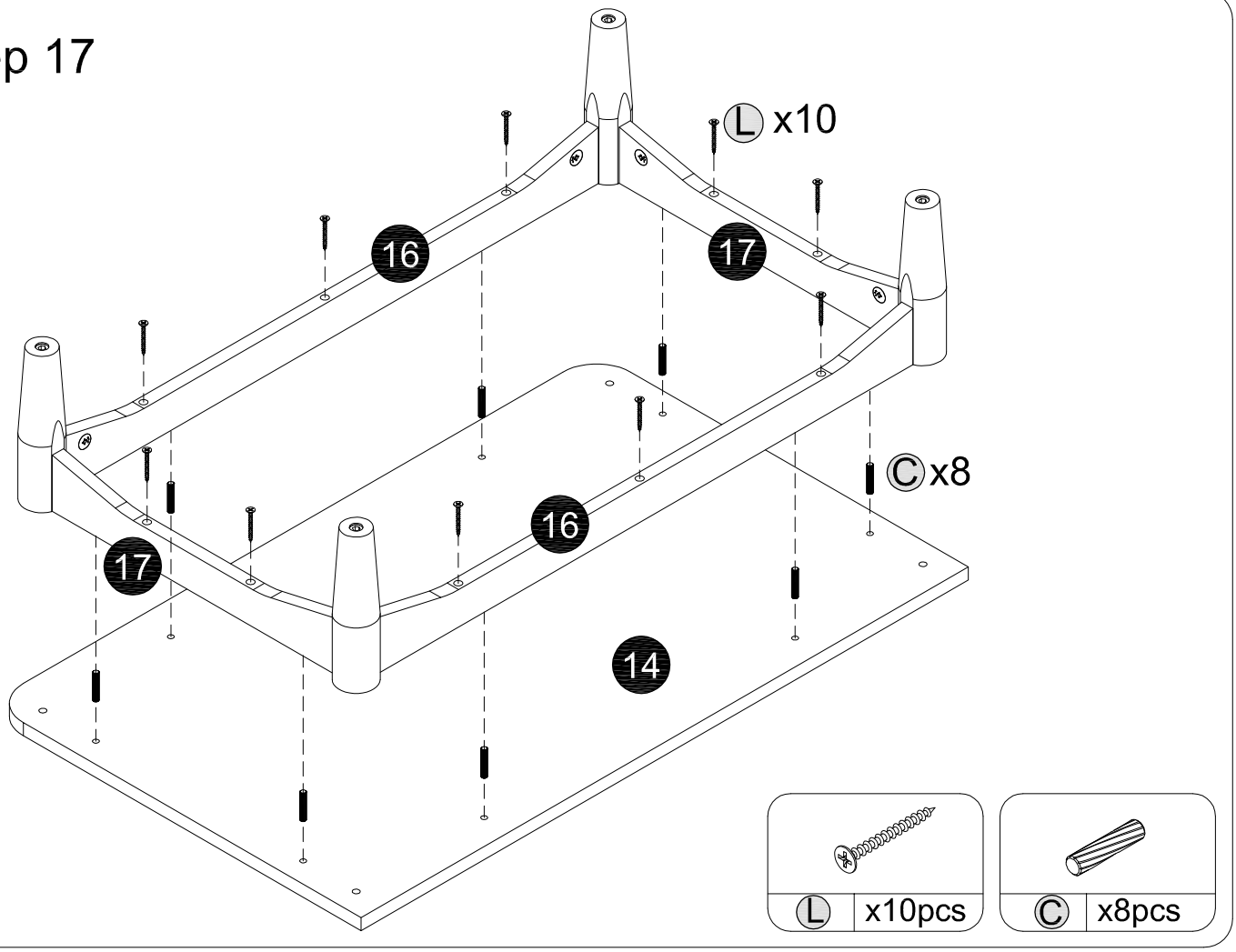

Step 18

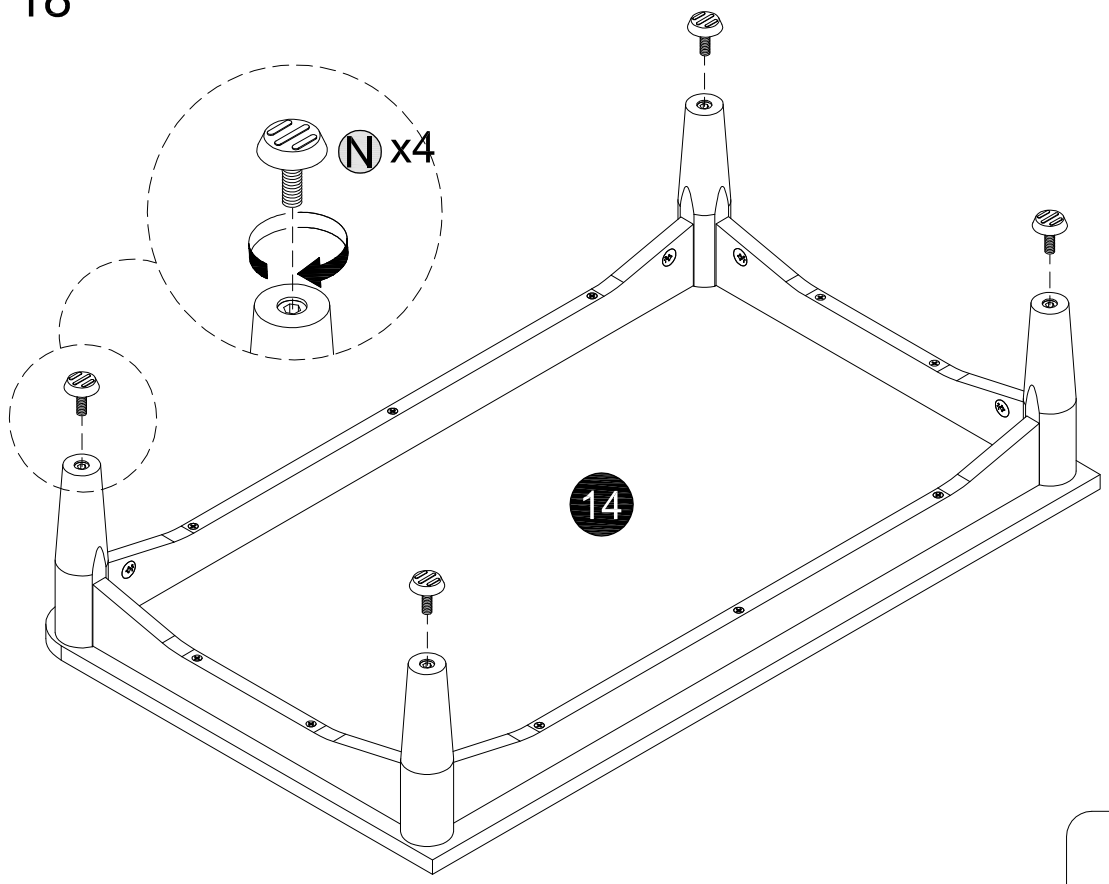

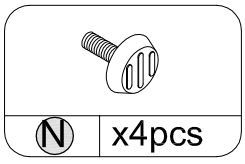

Step 19

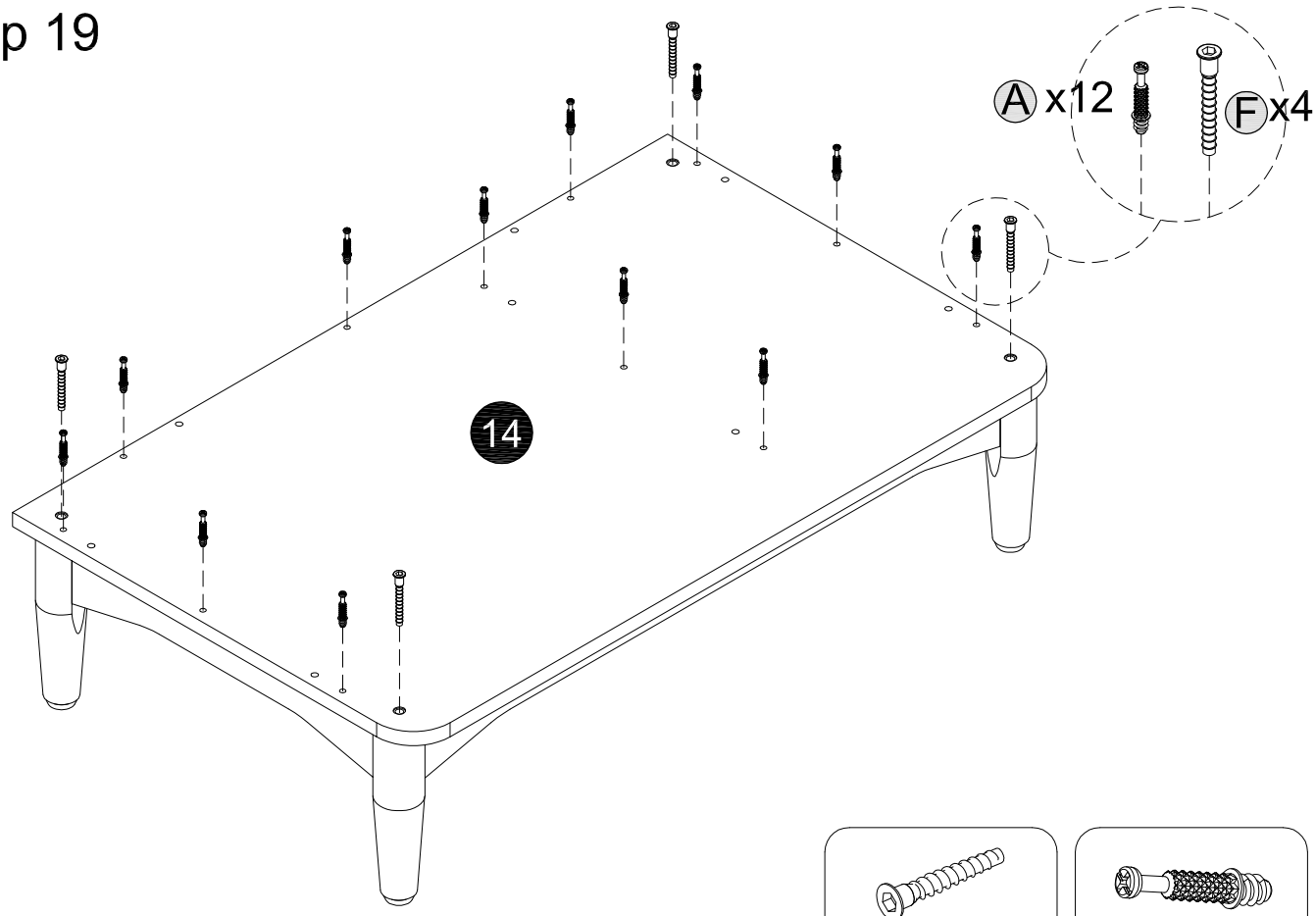

Step 20

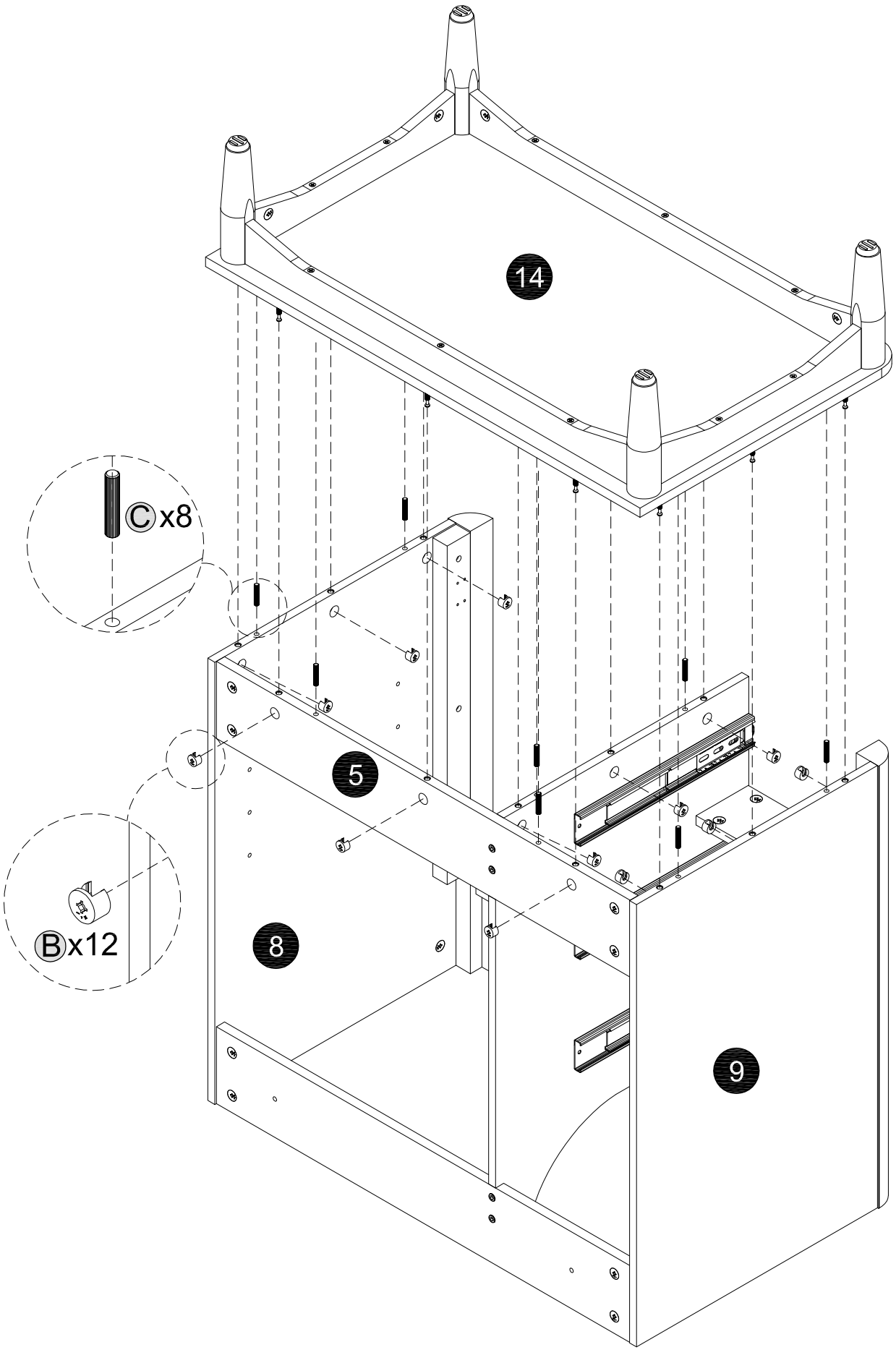

C	x8pcs
B	x12pcs

Step 21

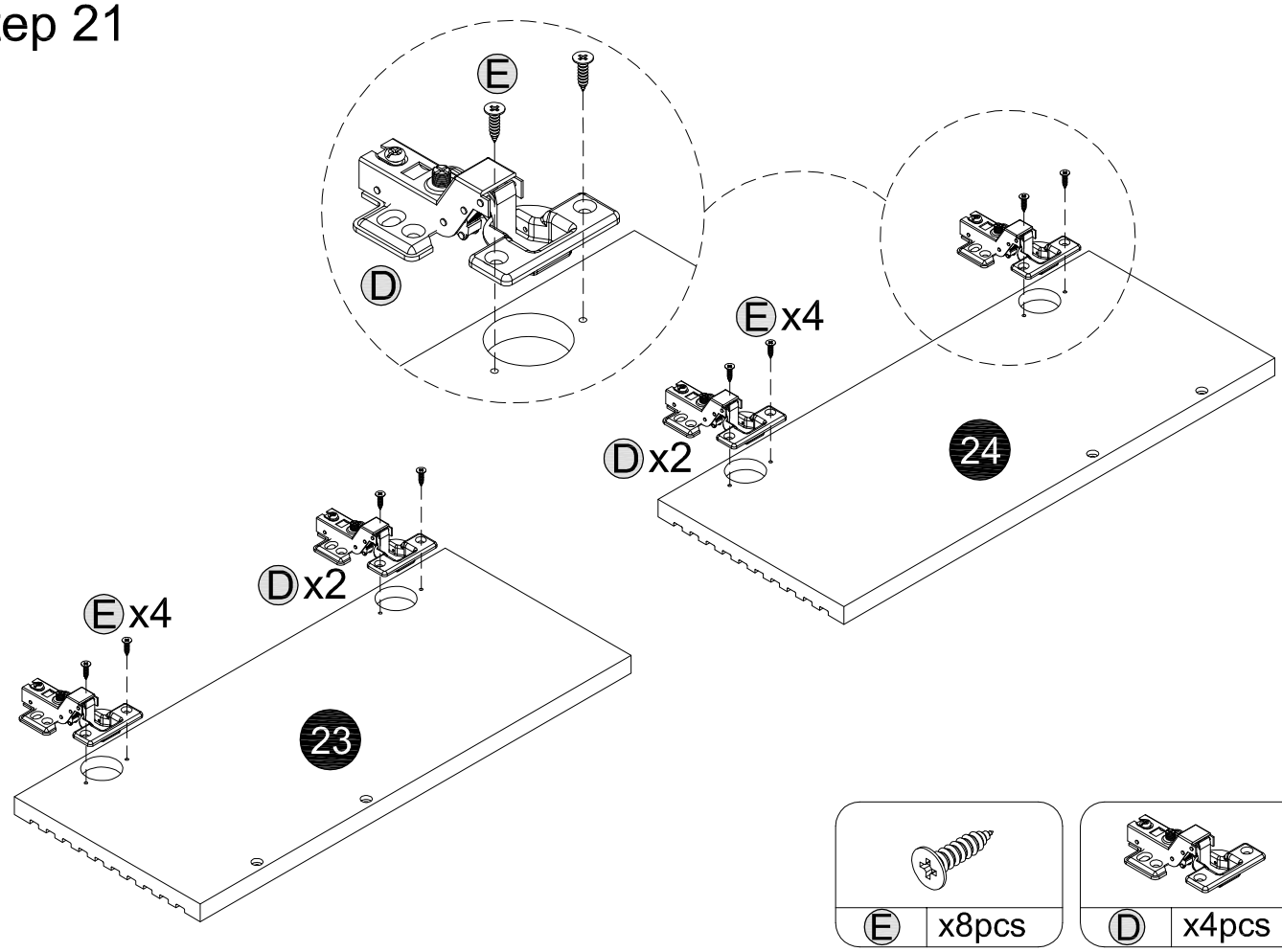

Step 22

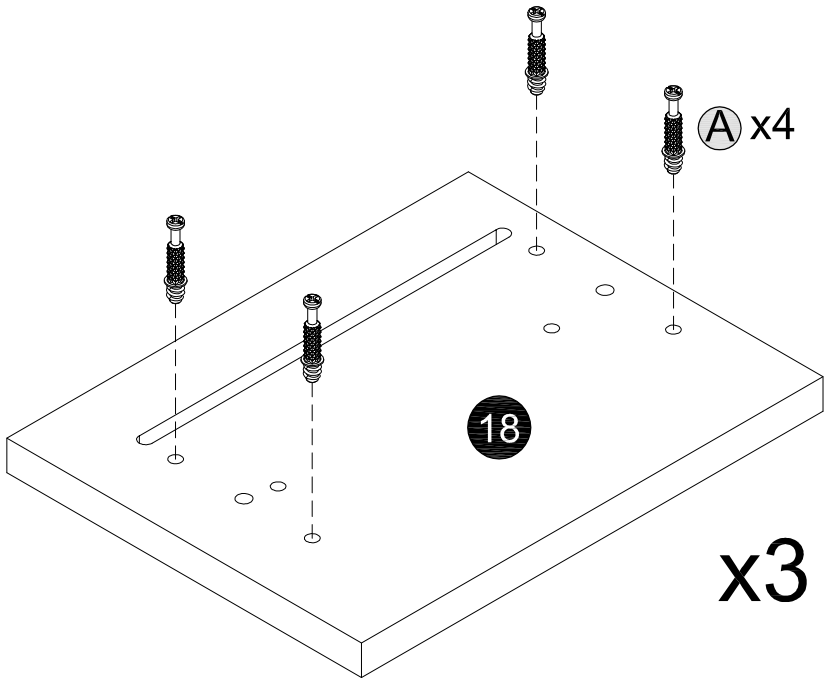

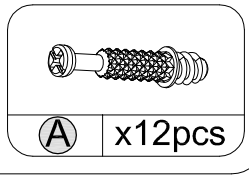

Step 23

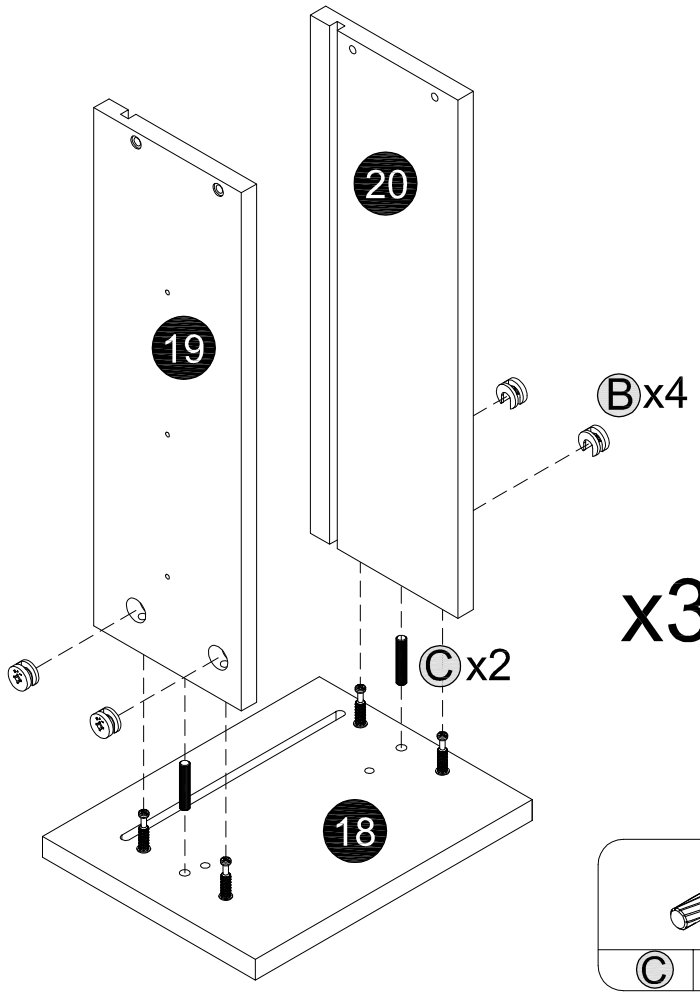

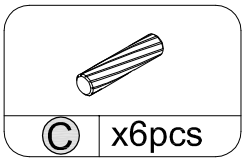

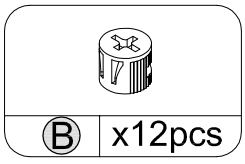

Step 24

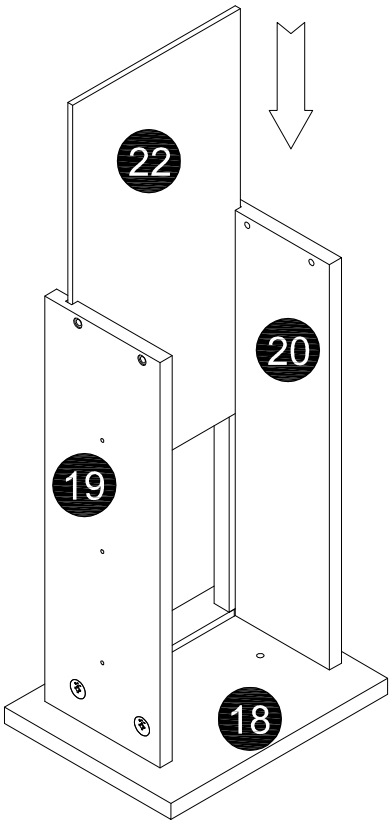

x3

Step 25

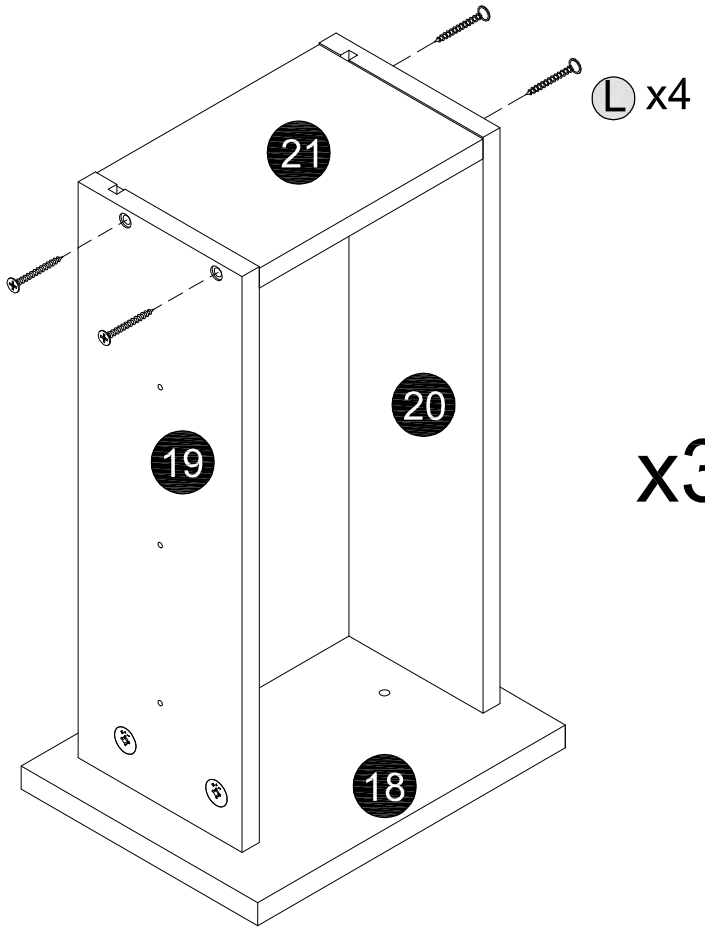

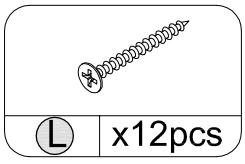

Step 26

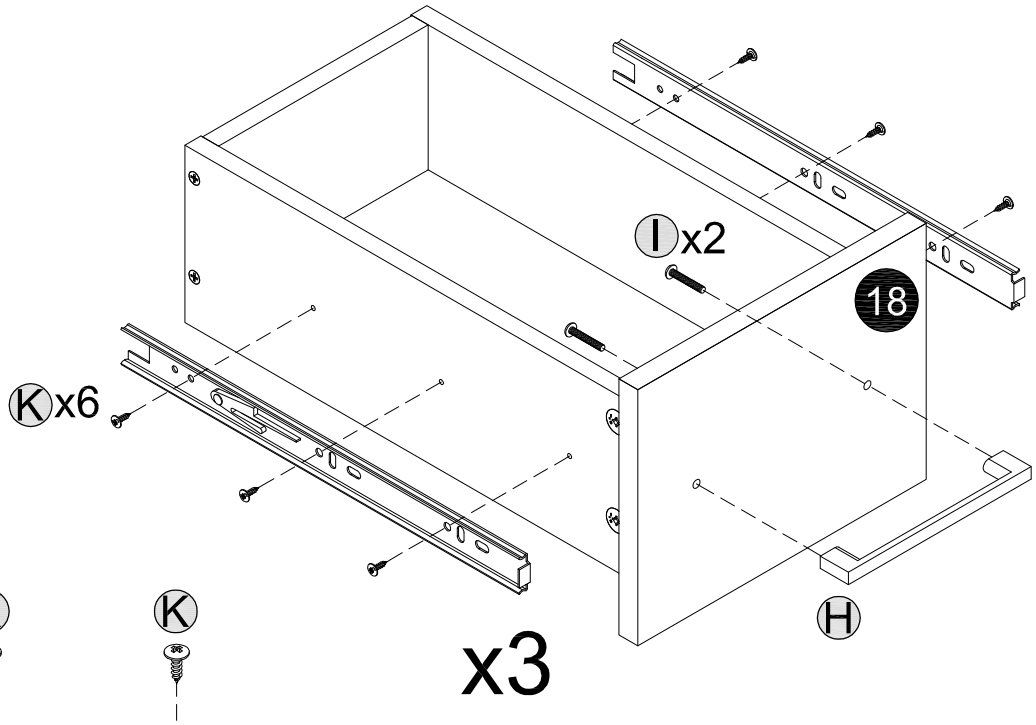

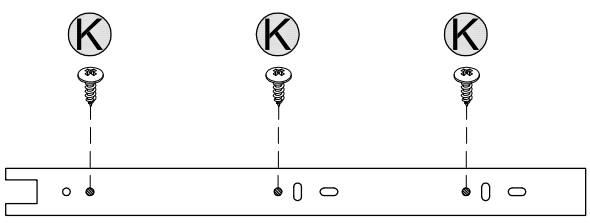

S-1

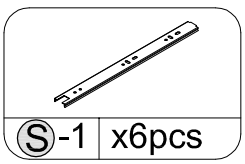

Step 27

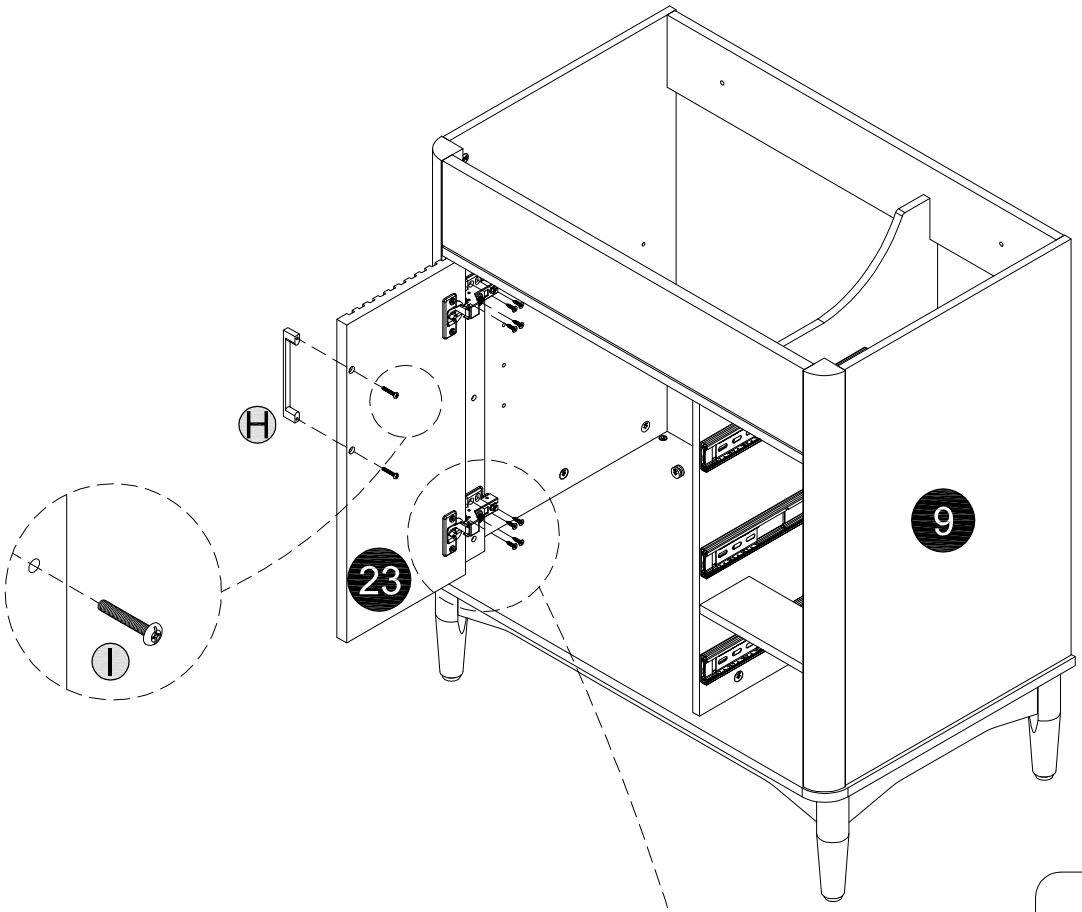

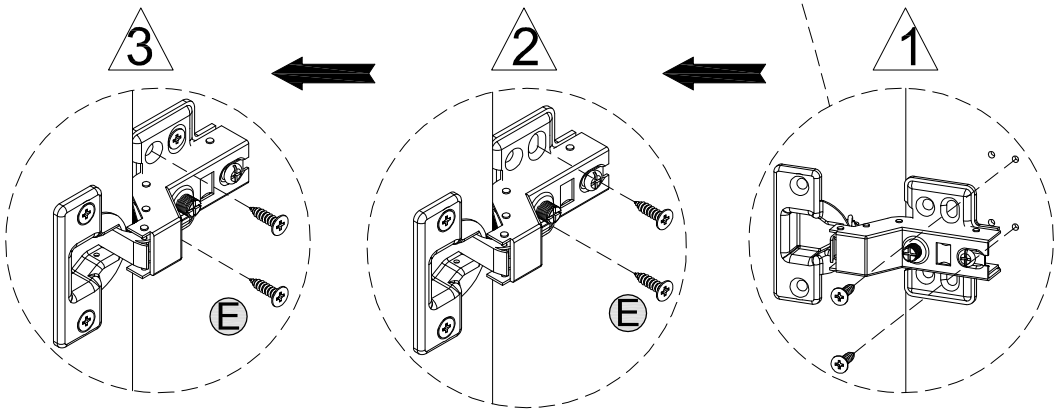

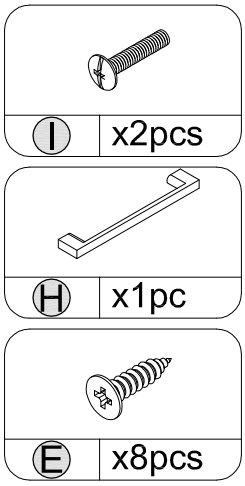

When the hinges are installed, you can refer to the pictures to adjust crevice of the doors till it's perfect

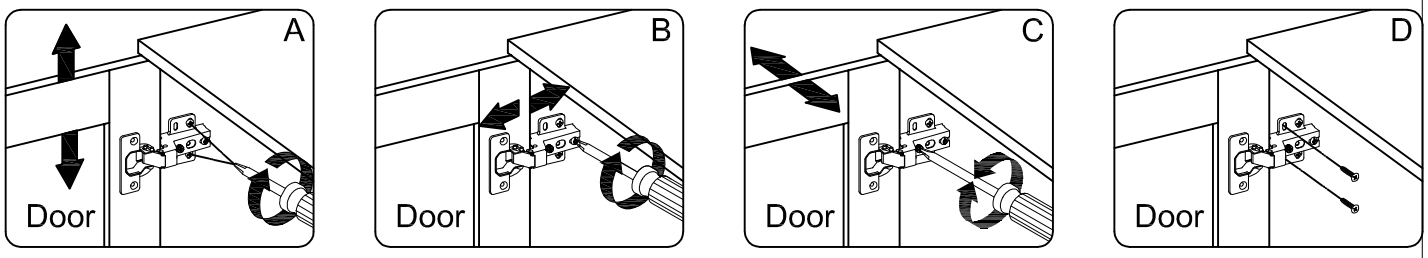

1. To adjust the doors up and down, please refer to step (A)
2. To adjust the distance between the doors and side panels, please refer to (B)
3. To adjust the gap between two doors, please refer to step (C)
4. After the adjustment finished, please tight the screws, refer to step (D)

Step 28

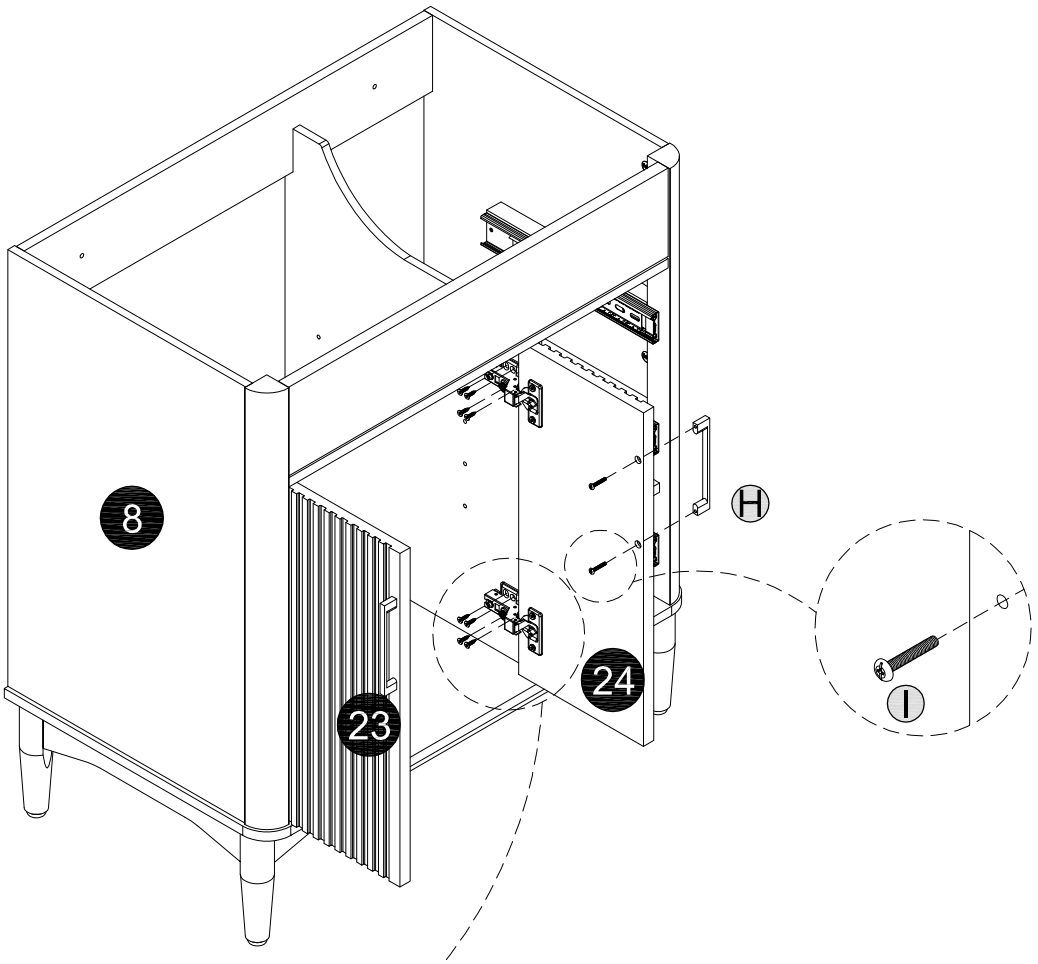

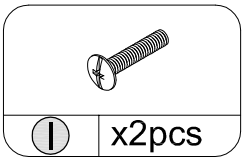

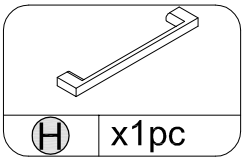

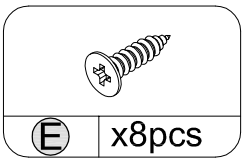

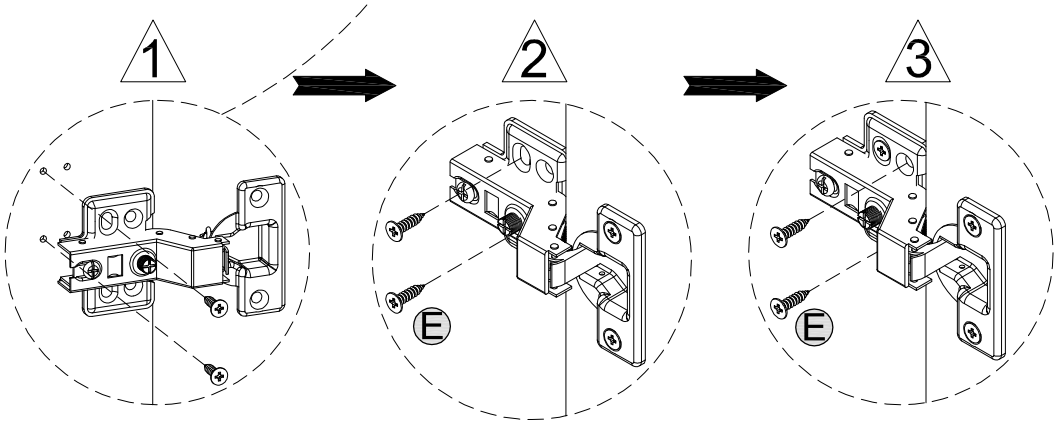

When the hinges are installed, you can refer to the pictures to adjust crevice of the doors till it's perfect

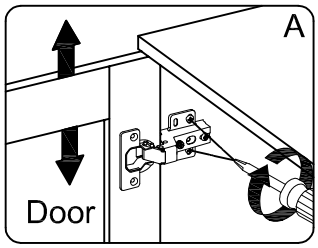

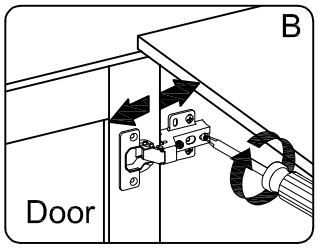

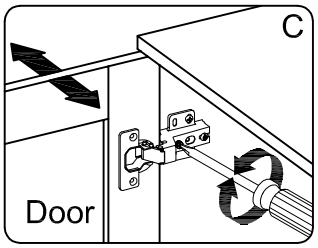

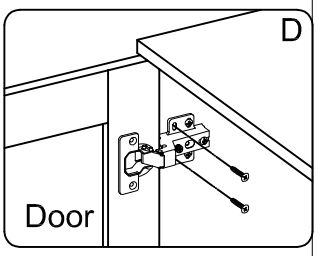

1. To adjust the doors up and down, please refer to step (A)
2. To adjust the distance between the doors and side panels, please refer to (B)
3. To adjust the gap between two doors, please refer to step (C)
4. After the adjustment finished, please tight the screws, refer to step (D)

Step 29

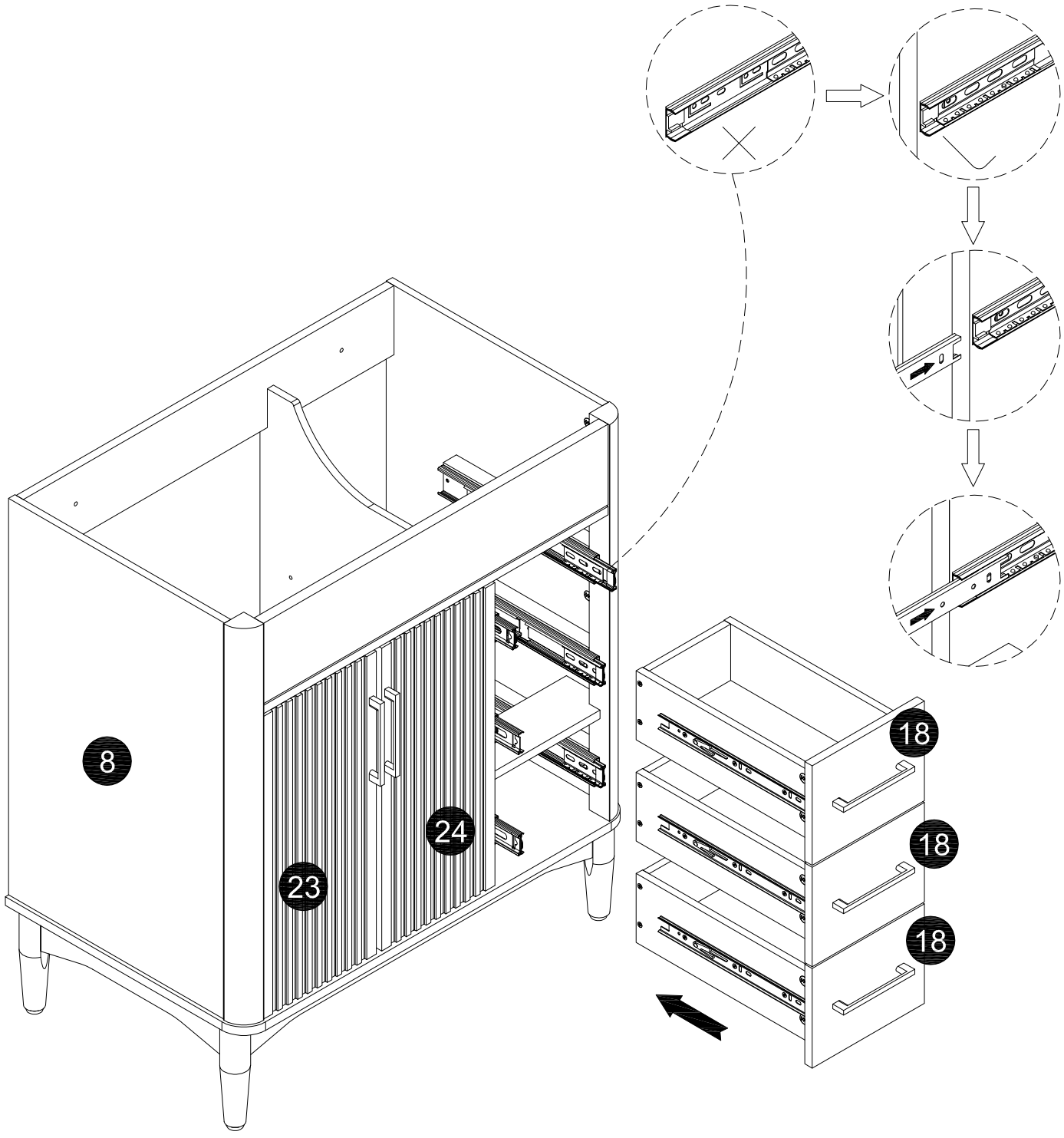

Step 30

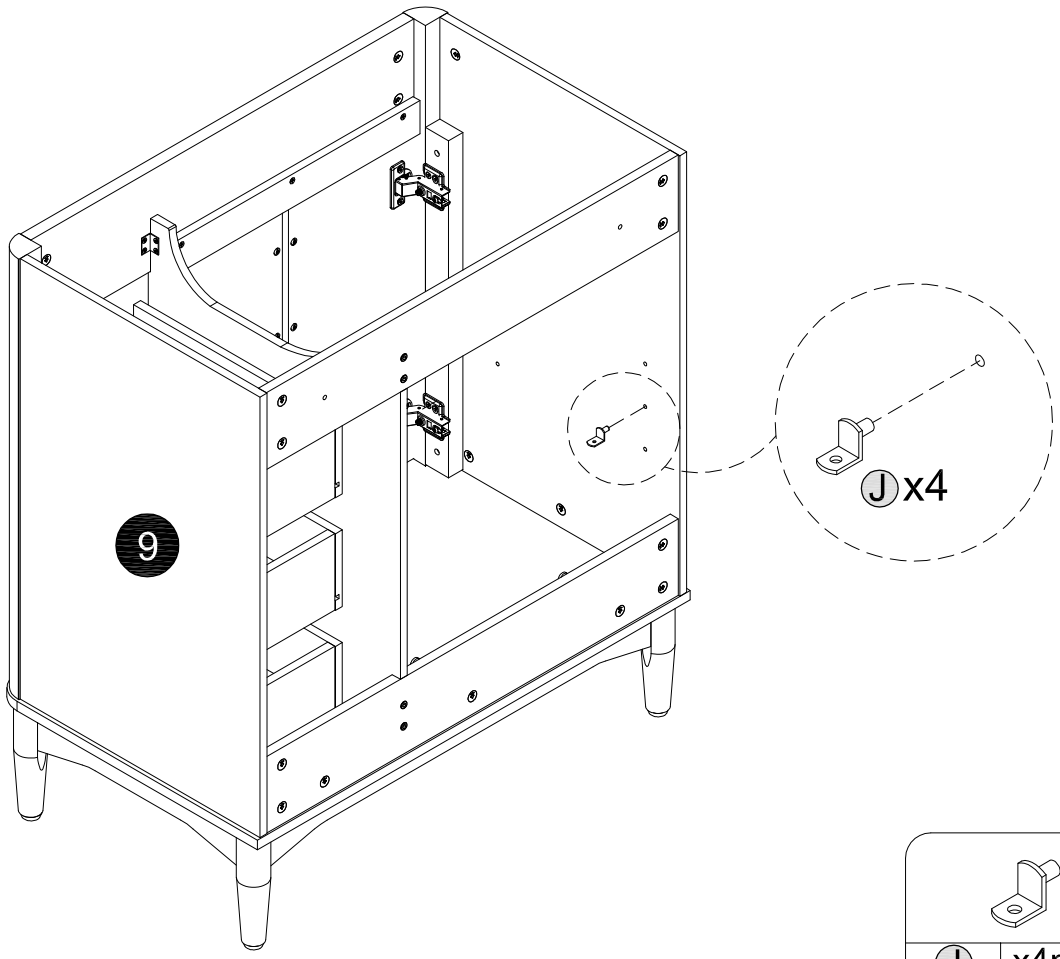

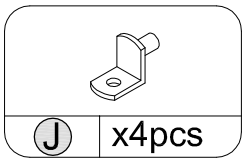

Step 31

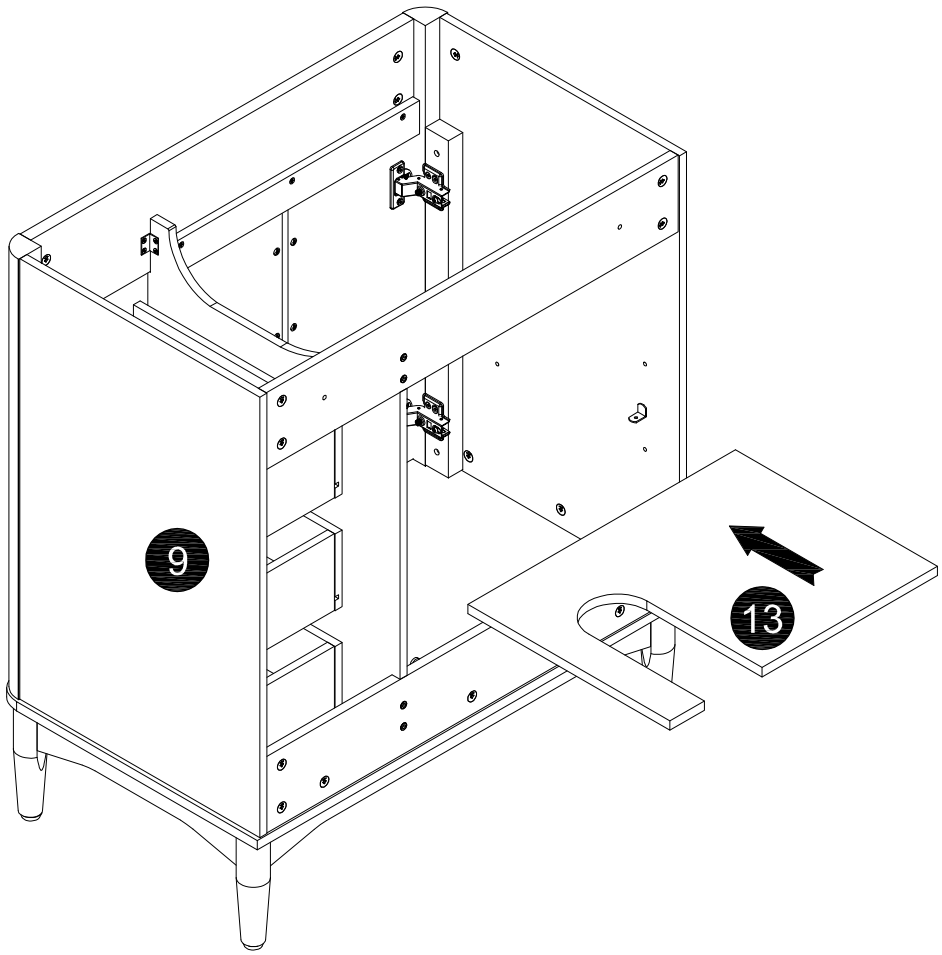

Step 32

***Note:** Clean area where the vanity will be permanently located prior to beginning installation, ensuring the vanity will not interfere with any water supply and drain lines once mounted.

* With the help of another adult, carefully place vanity against the wall in its final location. From inside vanity, drill hole through vanity mounting area and into wall studs.
Using mounting hardware (**O**) appropriate for your installation site, secure vanity to wall stud

* **WARNING**
Vanity **MUST** be secured to wall

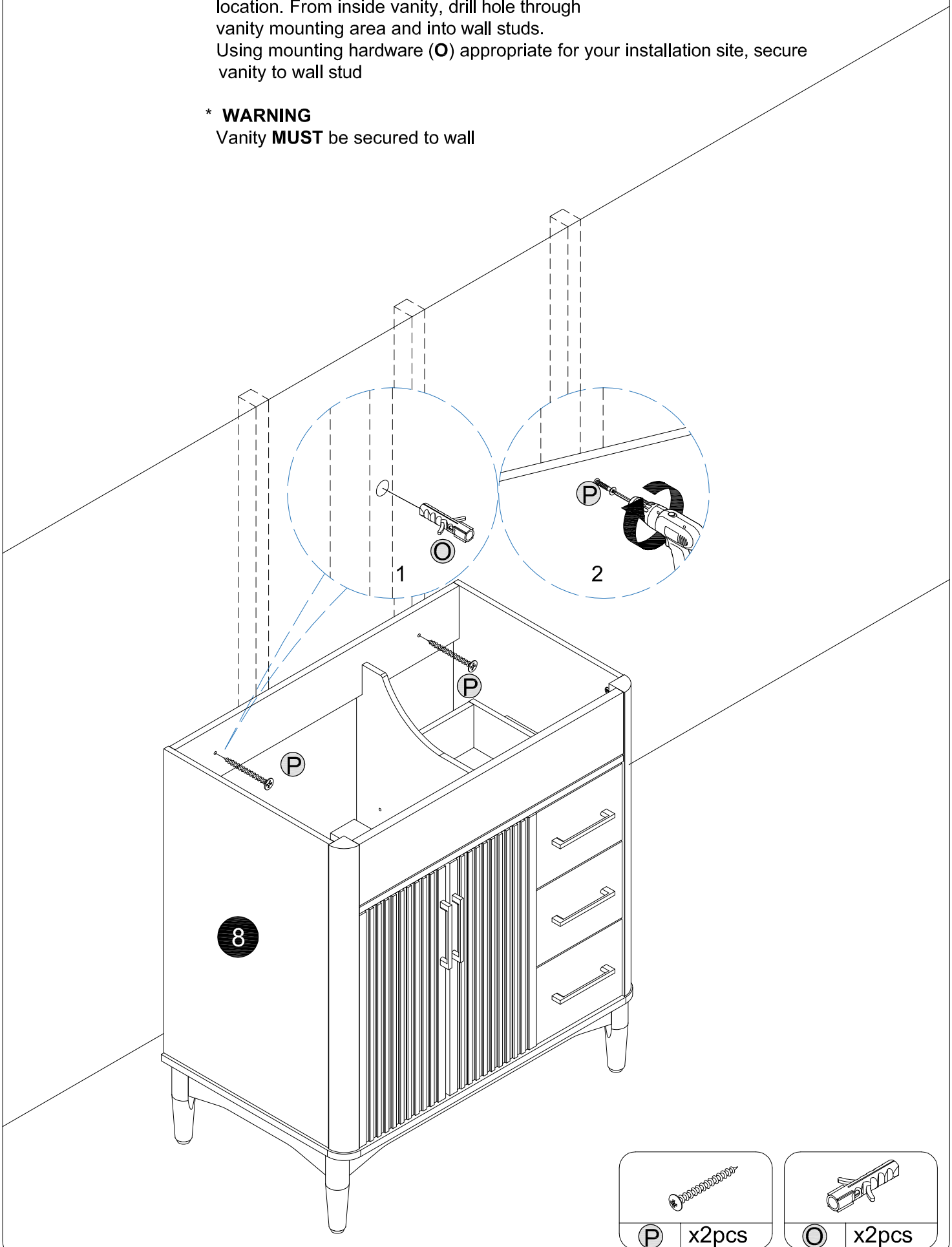

Step 33

Note: At this stage it may be easier to install the faucet and drain kit (not included) to top (25) per the manufacturer's instructions.

* Apply stain free silicone or latex silicone caulk (not included) to the top edge of vanity. With the help of another adult, gently lower top (25) onto the vanity. Wipe away any excess caulk with a soft cloth, and wait approximately 24 hours for it to dry.

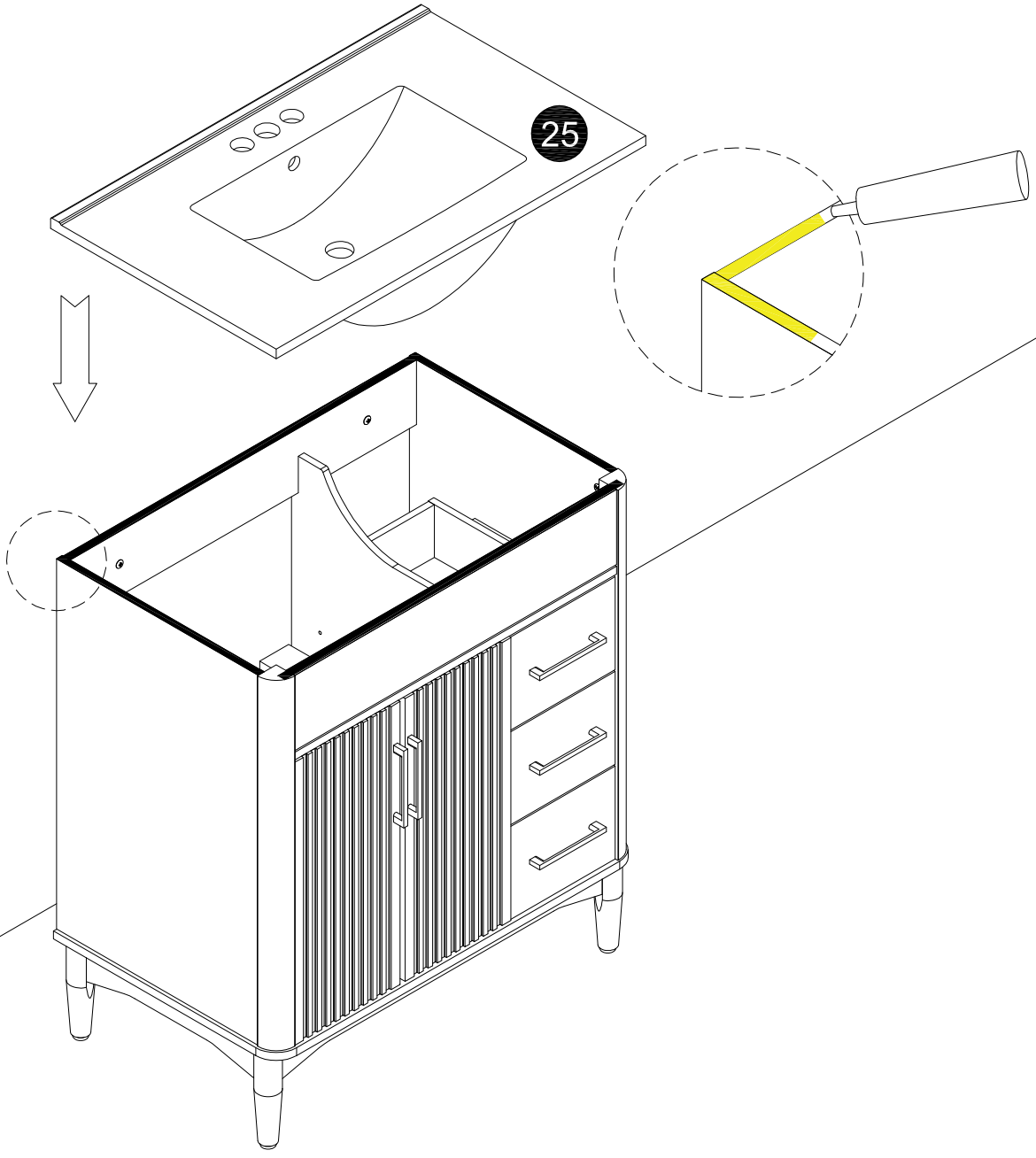

Step 34

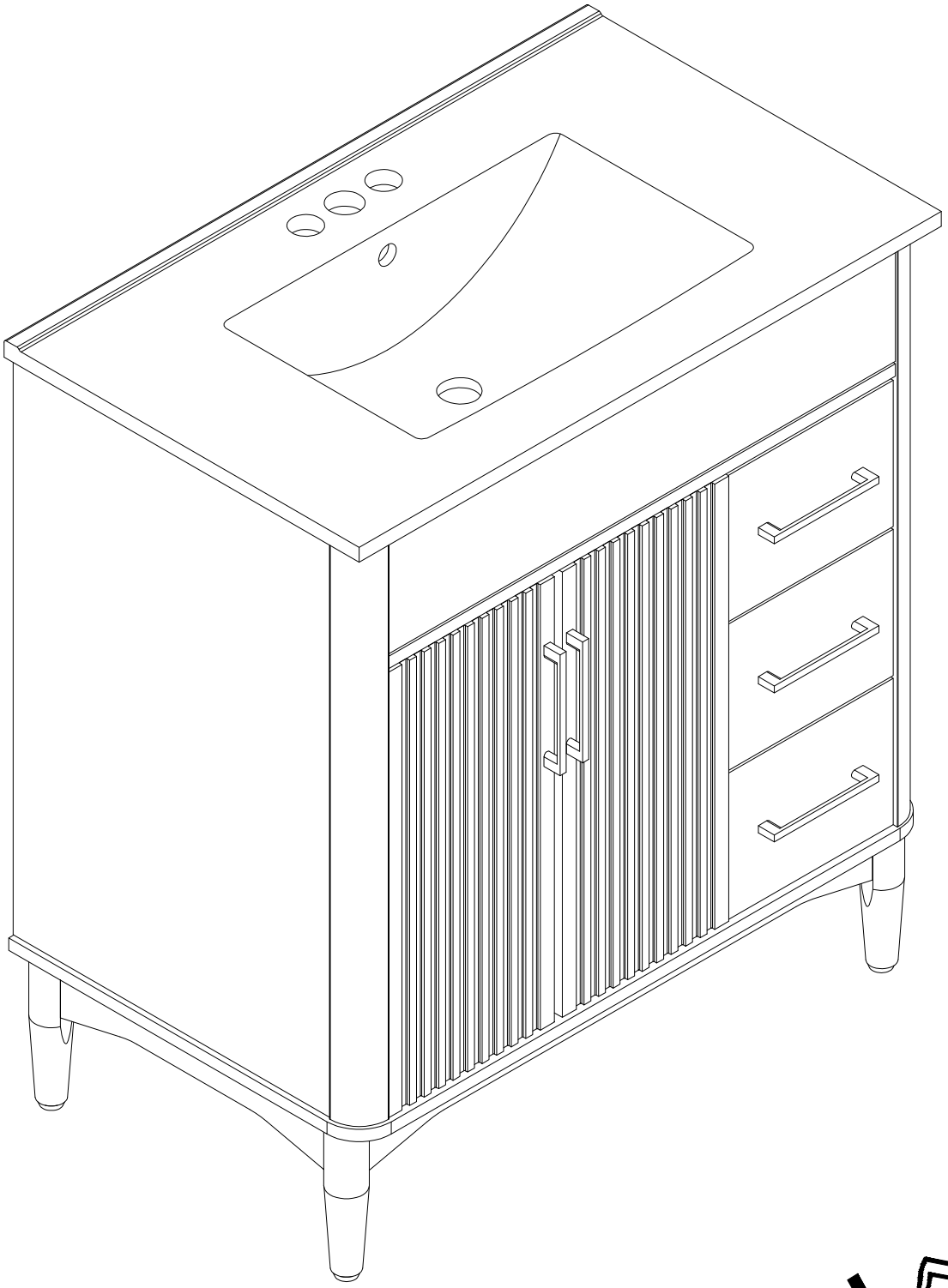

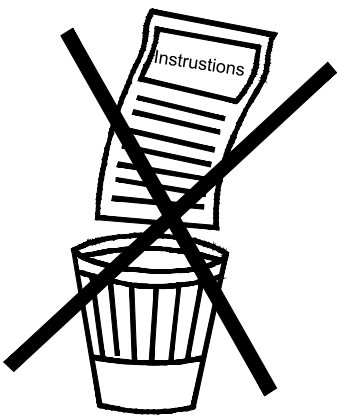

HINGE ADJUSTMENTS

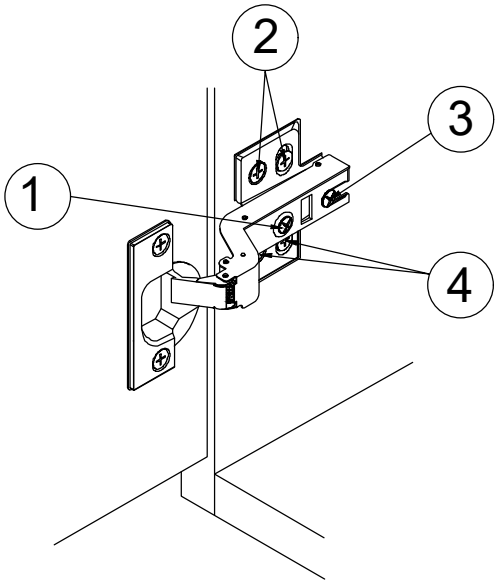

1 Sideways / Tilt adjustment

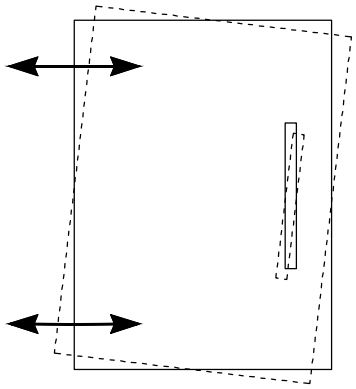

Turn the screw
clockwise to move the door further away from the side of the cabinet
anticlockwise to move the door closer to the side of the cabinet

2 4 Height adjustment

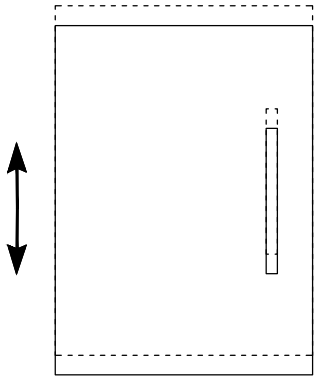

While supporting the weight of the door, turn the screws
clockwise to move the door up
anticlockwise to move the door down

3 Forward and back adjustment

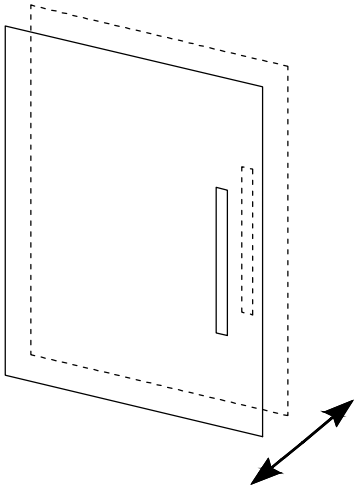

If the gap between the back of the door and the cabinet is too small, and the door may not close fully. Turn the screw
clockwise to decrease the gap between the door and the cabinet
anticlockwise to increase the gap between the door and the cabinet