ASSEMBLY INSTRUCTION

SKU CODE (RH00104)

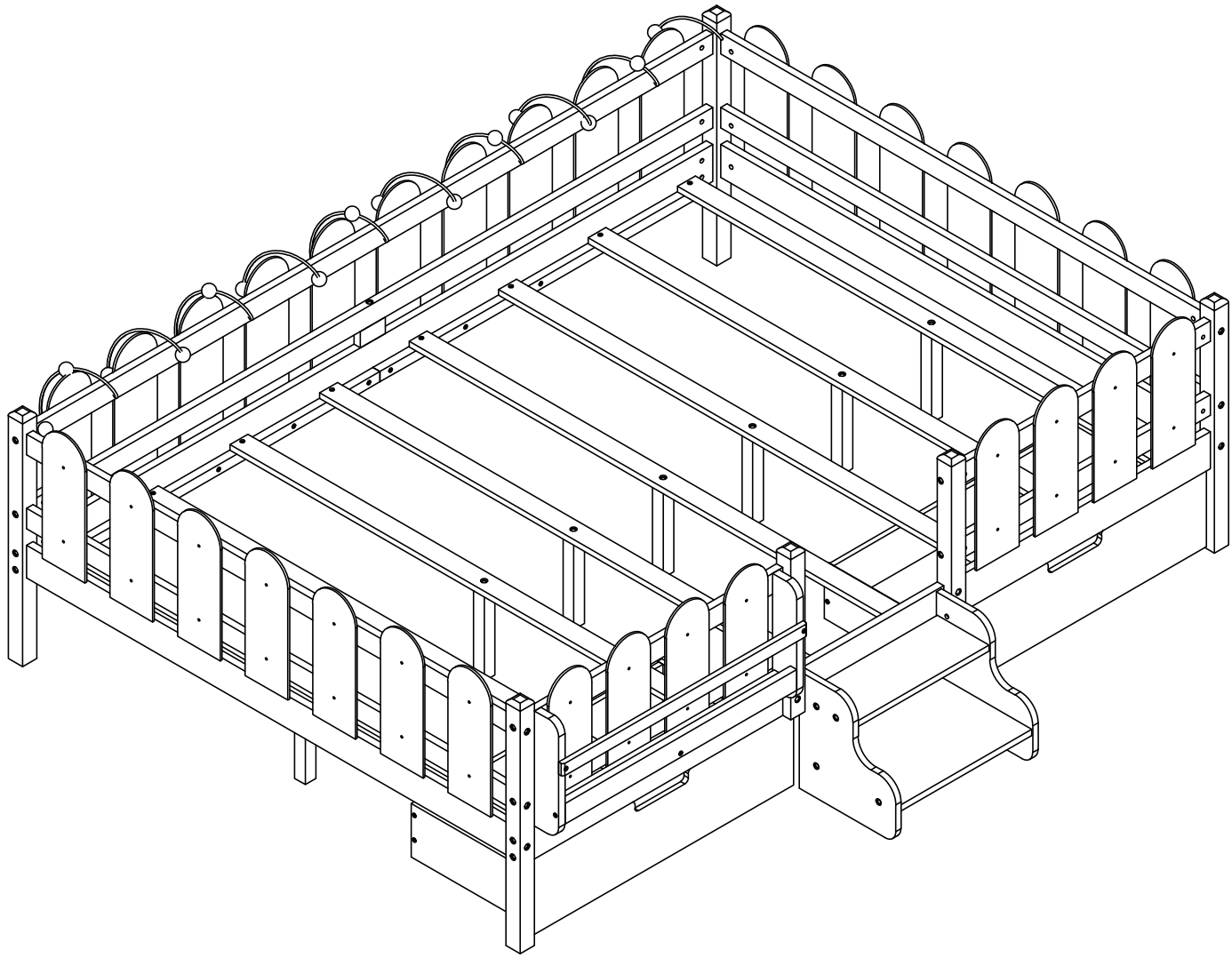

Bed type	Length	Width	Thickness
Full Standard	75"	54"	6" max

Detail View

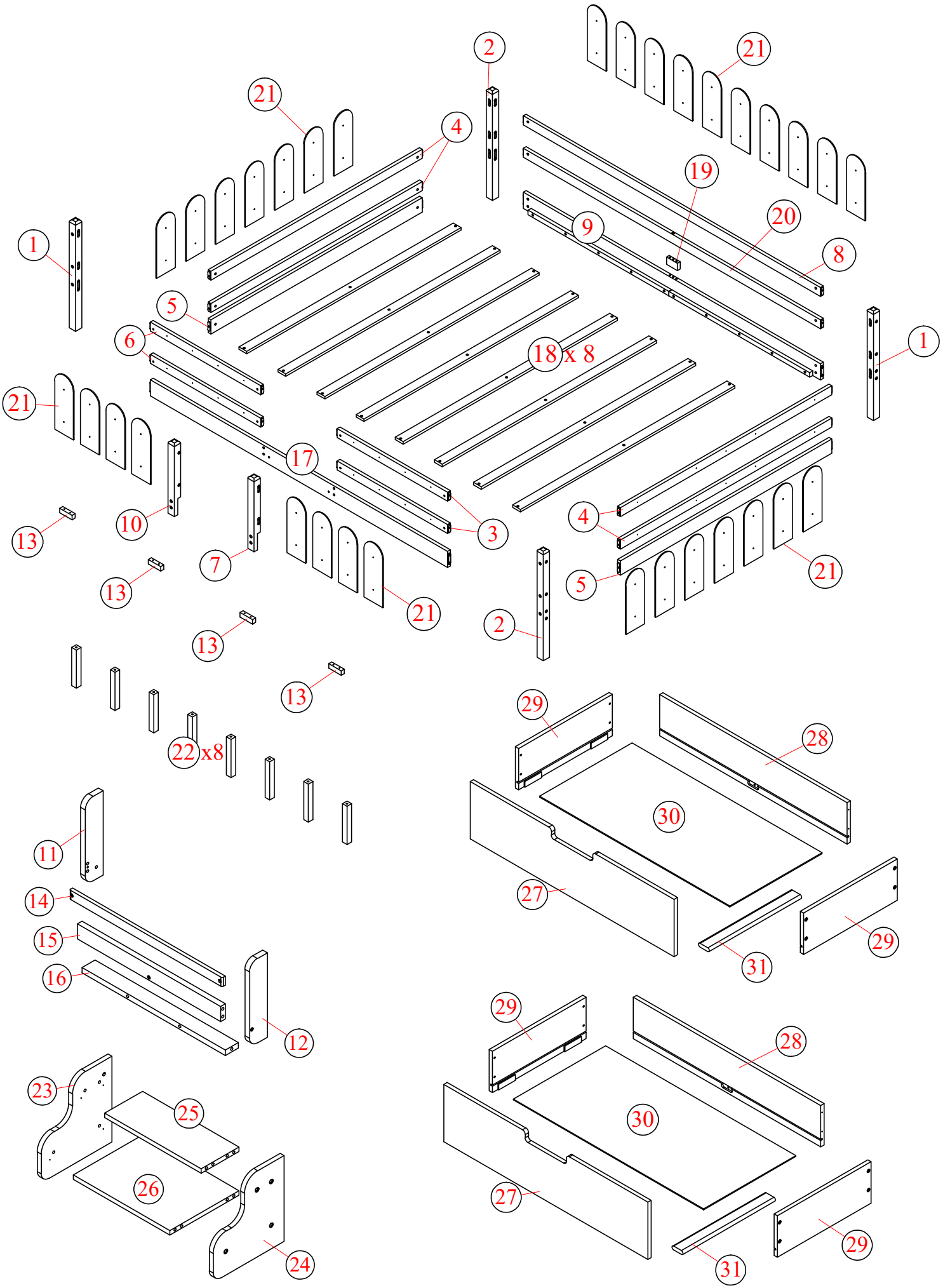
1
2
3
4
5
6
7
8
9
10
11
12
13
14
15
16
17
18 x 8
19
20
21
22 x8
23
24
25
26
27
28
29
30
31

Part List (RH00104)

1  Leg : 2pcs	2  Leg : 2pcs	3 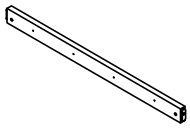 WoodBar : 2pcs
4 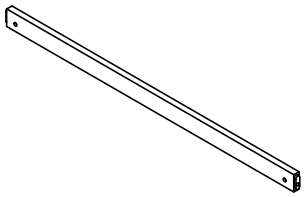 WoodBar : 4pcs	5 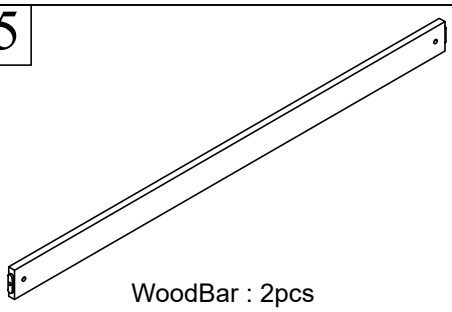 WoodBar : 2pcs	6 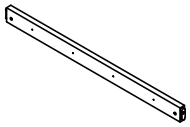 WoodBar : 2pcs
7 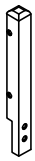 WoodBar : 1pc	8 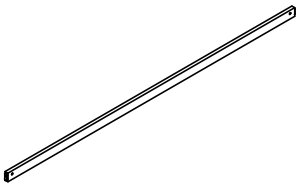 WoodBar : 1pc	9 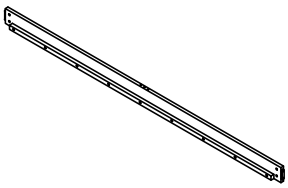 Side Rail : 1pc
10  WoodBar : 1pc	11  WoodBar : 1pc	12  WoodBar : 1pc
13 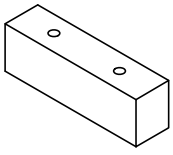 WoodBar : 4pcs	14 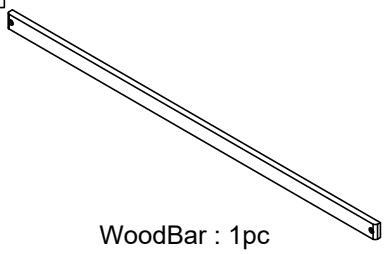 WoodBar : 1pc	15 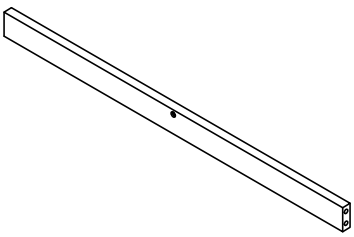 WoodBar : 1pc
16 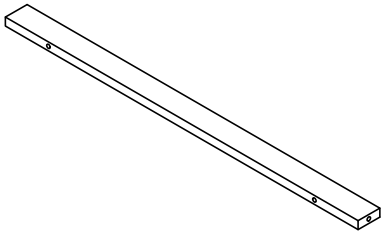 WoodBar : 1pc	17 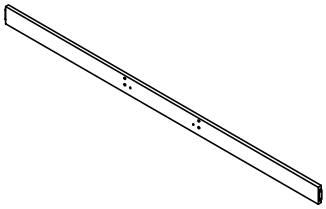 Side Rail : 1pc	18 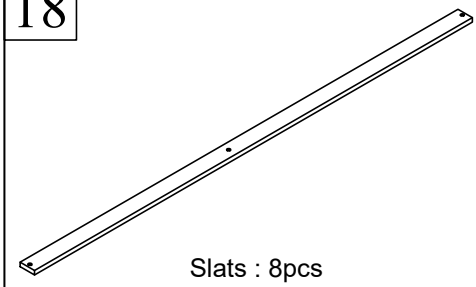 Slats : 8pcs

Part List (RH00104)

19 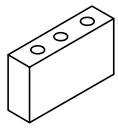 WoodBar : 1pc	20 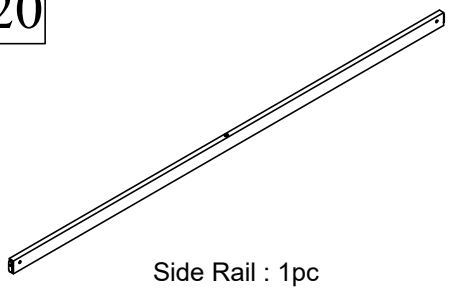 Side Rail : 1pc	21  Panel : 32pcs
22  Leg : 8pcs	23 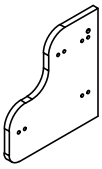 Panel : 1pc	24 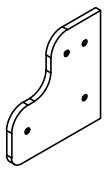 Panel : 1pc
25 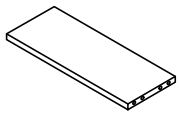 Panel : 1pc	26 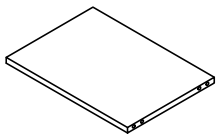 Panel : 1pc	27 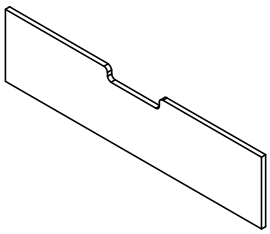 Panel : 2pcs
28 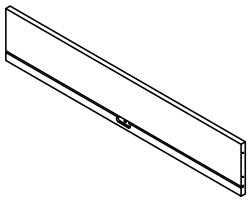 Panel : 2pcs	29 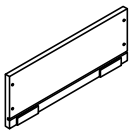 Panel : 4pcs	30 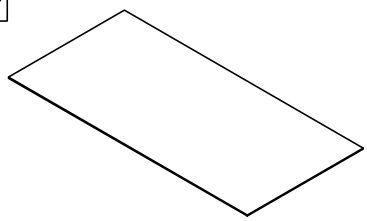 Panel : 2pcs
31 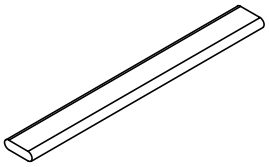 WoodBar : 2pcs		

Hardware List (RH00104)

A 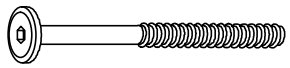 Ø1/4" x 80mm Hex-head bolt (32pcs)	B  Ø8 x 30mm Wood dowel (20pcs)	C  Ø1/4" x 9.5 x 13mm Horizontal-hole bolt (32pcs)
D 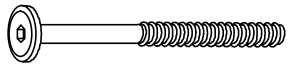 Ø1/4" x 60mm Hex-head bolt (10pcs)	E  Ø1/4" x 30mm Hex-head bolt (16pcs)	F 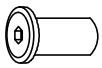 Ø1/4" x 15mm Sleever nuts (4pcs)
G 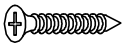 #4 x 30mm Screw (29pcs)	H 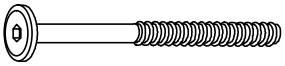 Ø1/4" x 100mm Hex-head bolt (1pc)	I  Ø1/4" x 9.5 x 10mm Horizontal-hole bolt (10pcs)
J 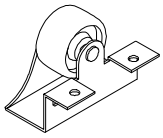 Sliding Wheel (8pcs)	K 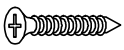 #4 x 25mm Screw (18pcs)	L  Straight bracket (2pcs)
M  #3.5 x 12mm Screw (36pcs)	N  K4mm Allen key (1pc)	O 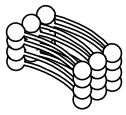 Led lights (1pc)
P 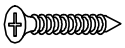 #3.5 x 15mm Screw (64pcs)		

ASSEMBLY TOOLS REQUIRED (NOT INCLUDED)

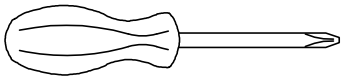

STEP- 1

A	C
12PCS	12PCS

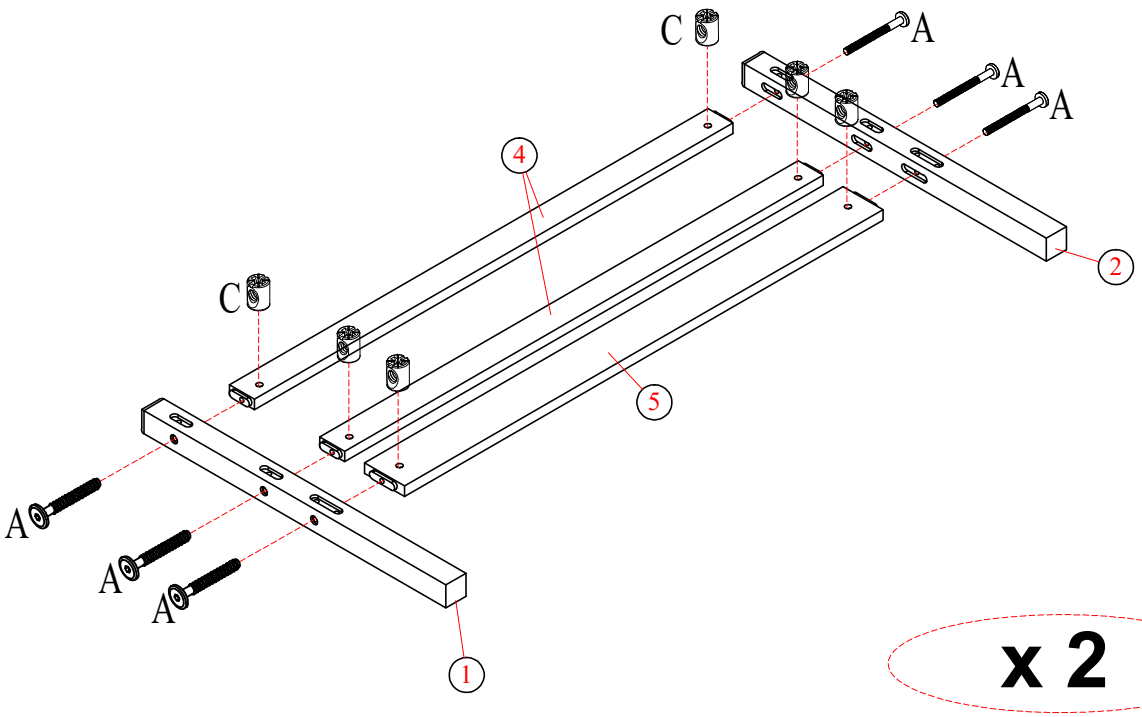

x 2

STEP- 2

G
8PCS

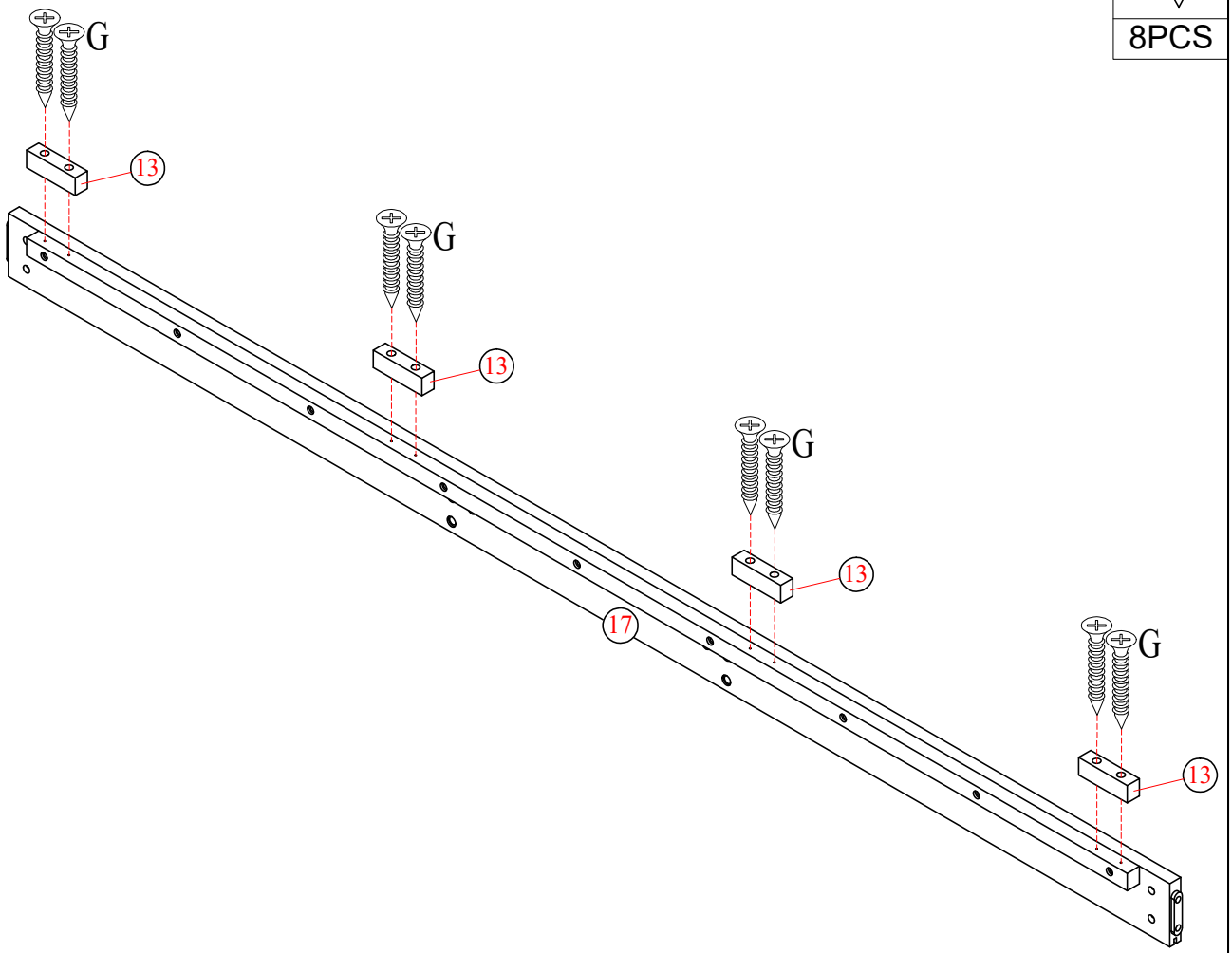

STEP- 3

B	H
4PCS	1PC

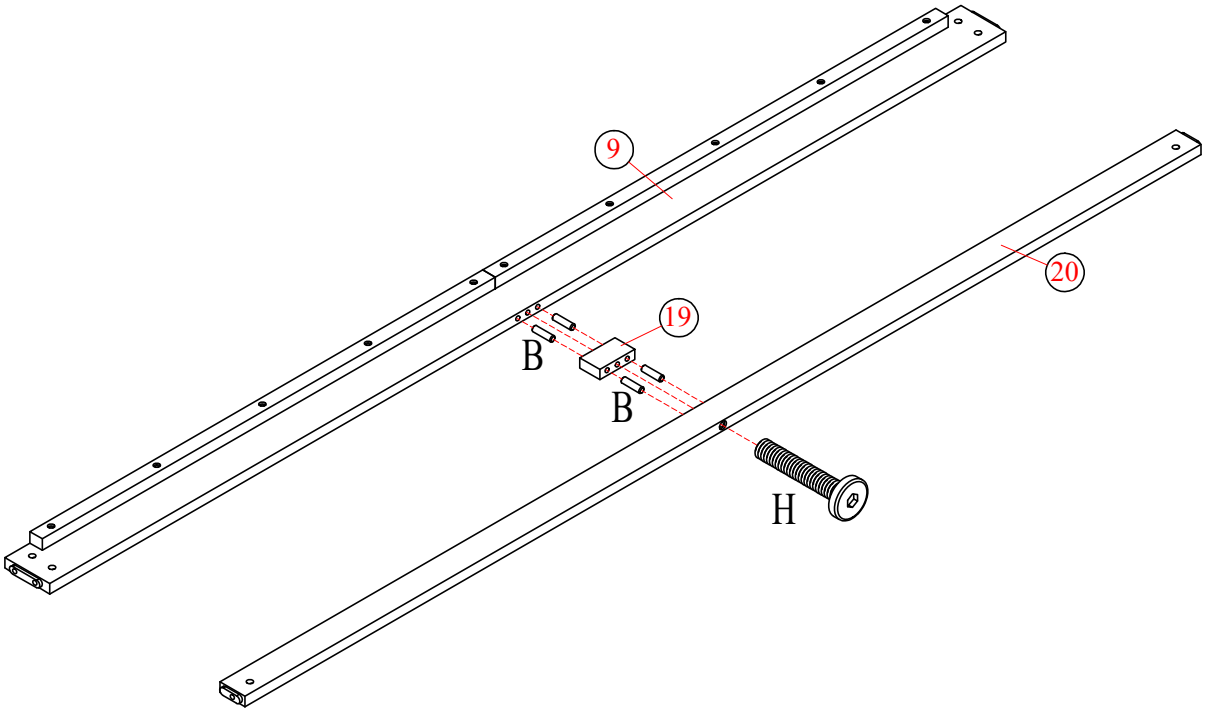

STEP- 4

A	C
12PCS	12PCS

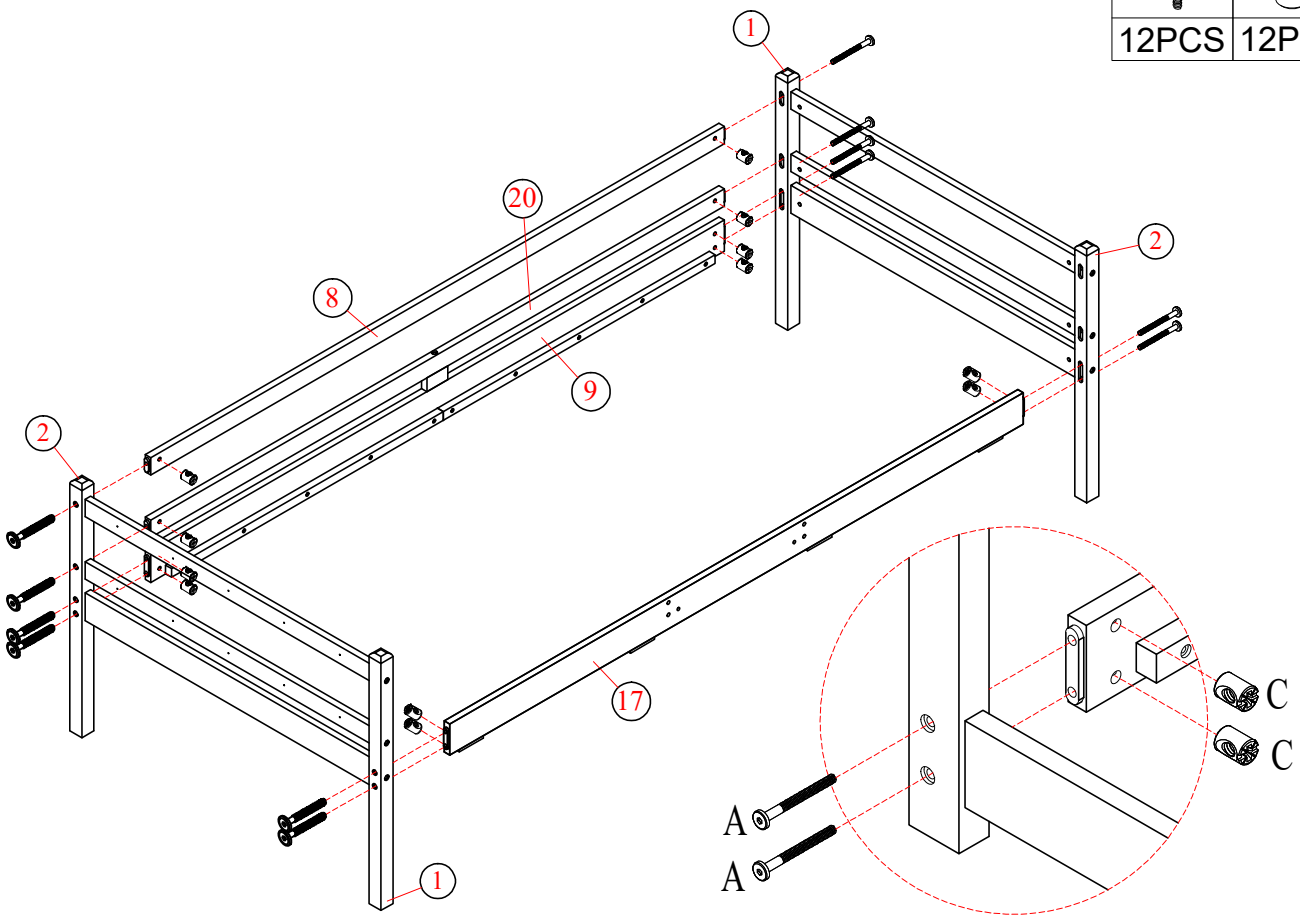

STEP- 5

A	C
4PCS	4PCS

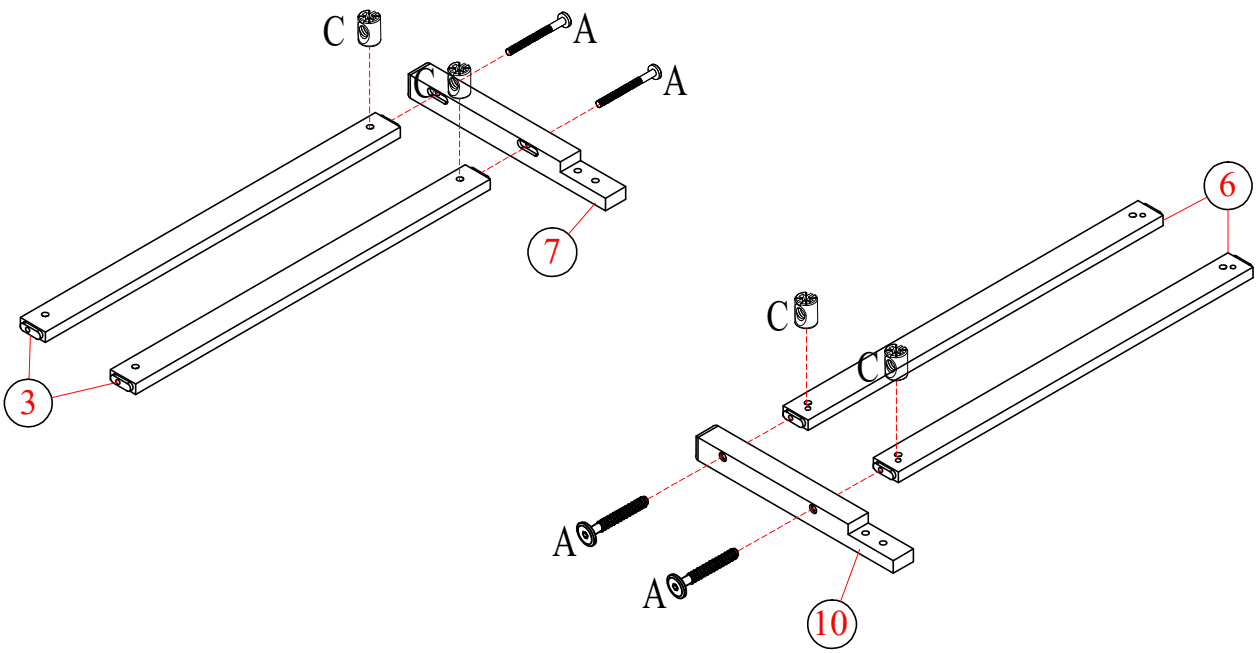

STEP- 6

A	C
4PCS	4PCS

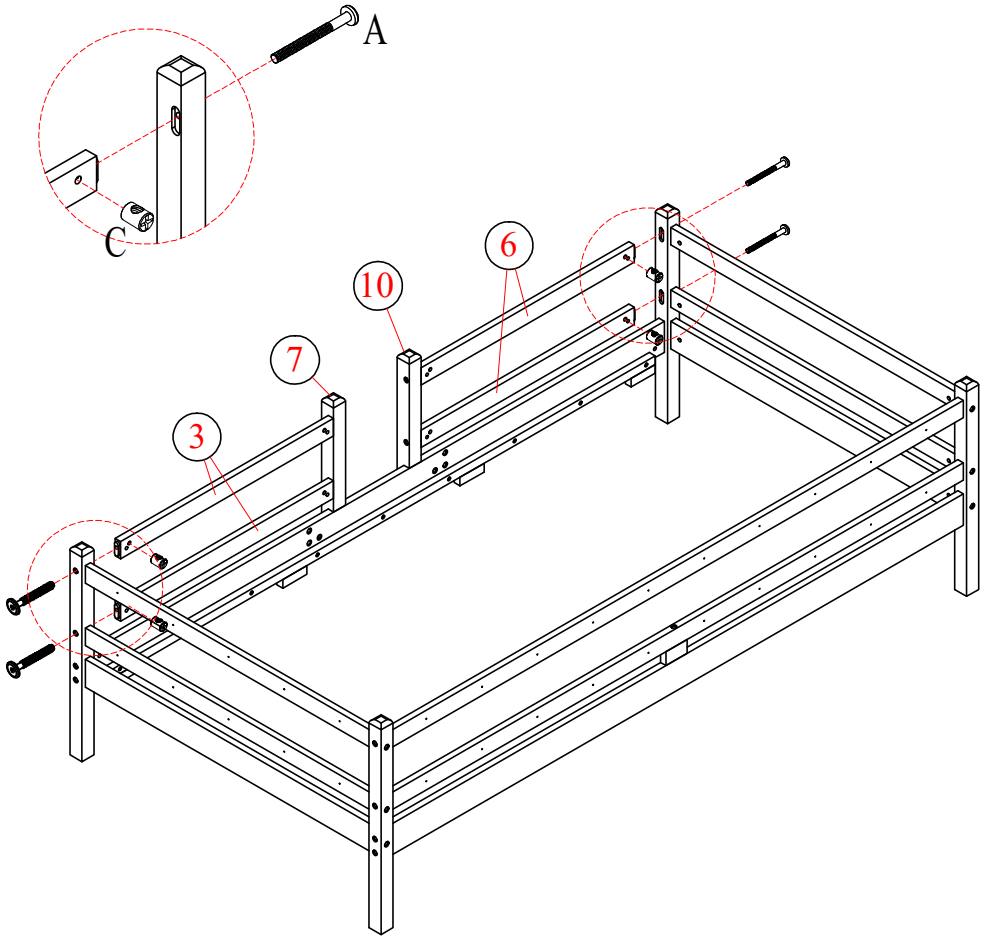

STEP- 7

F	E
4PCS	4PCS

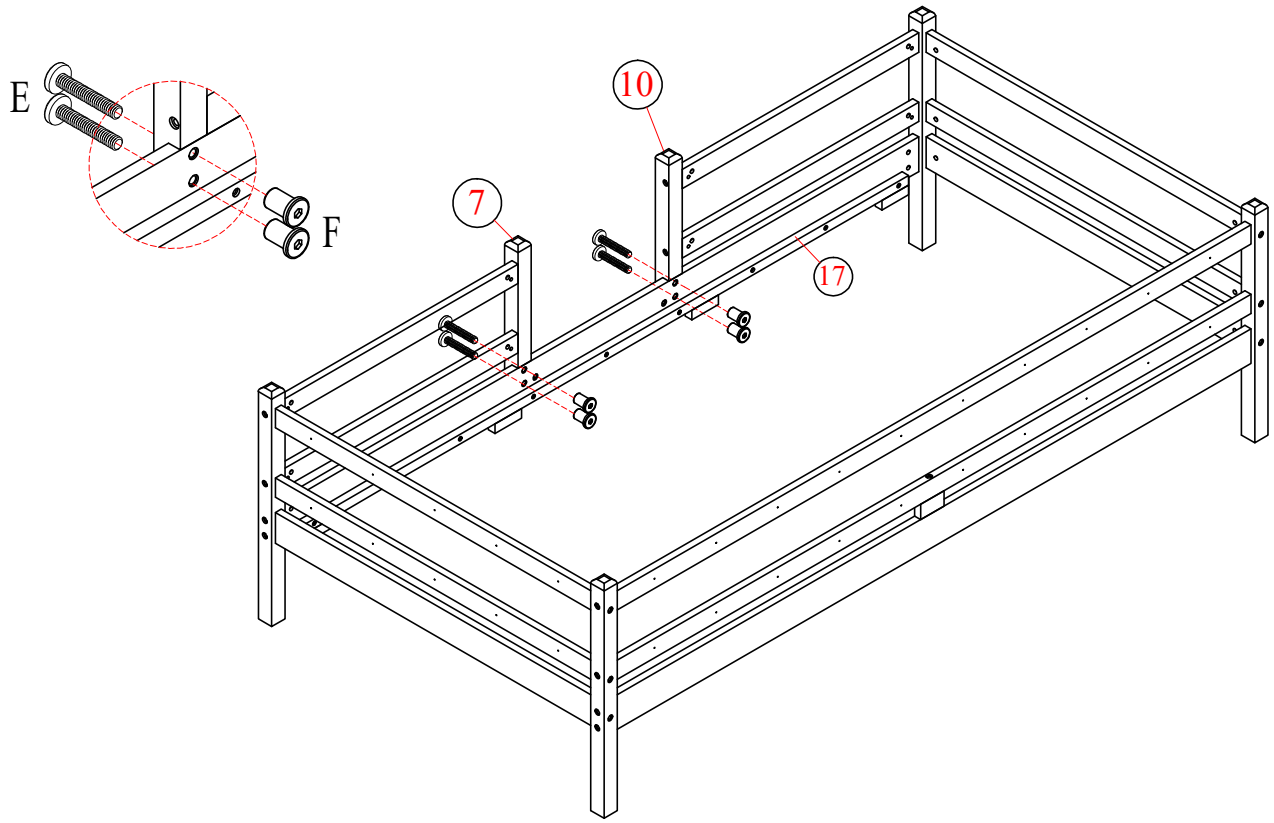

STEP- 8

E	G
8PCS	16PCS

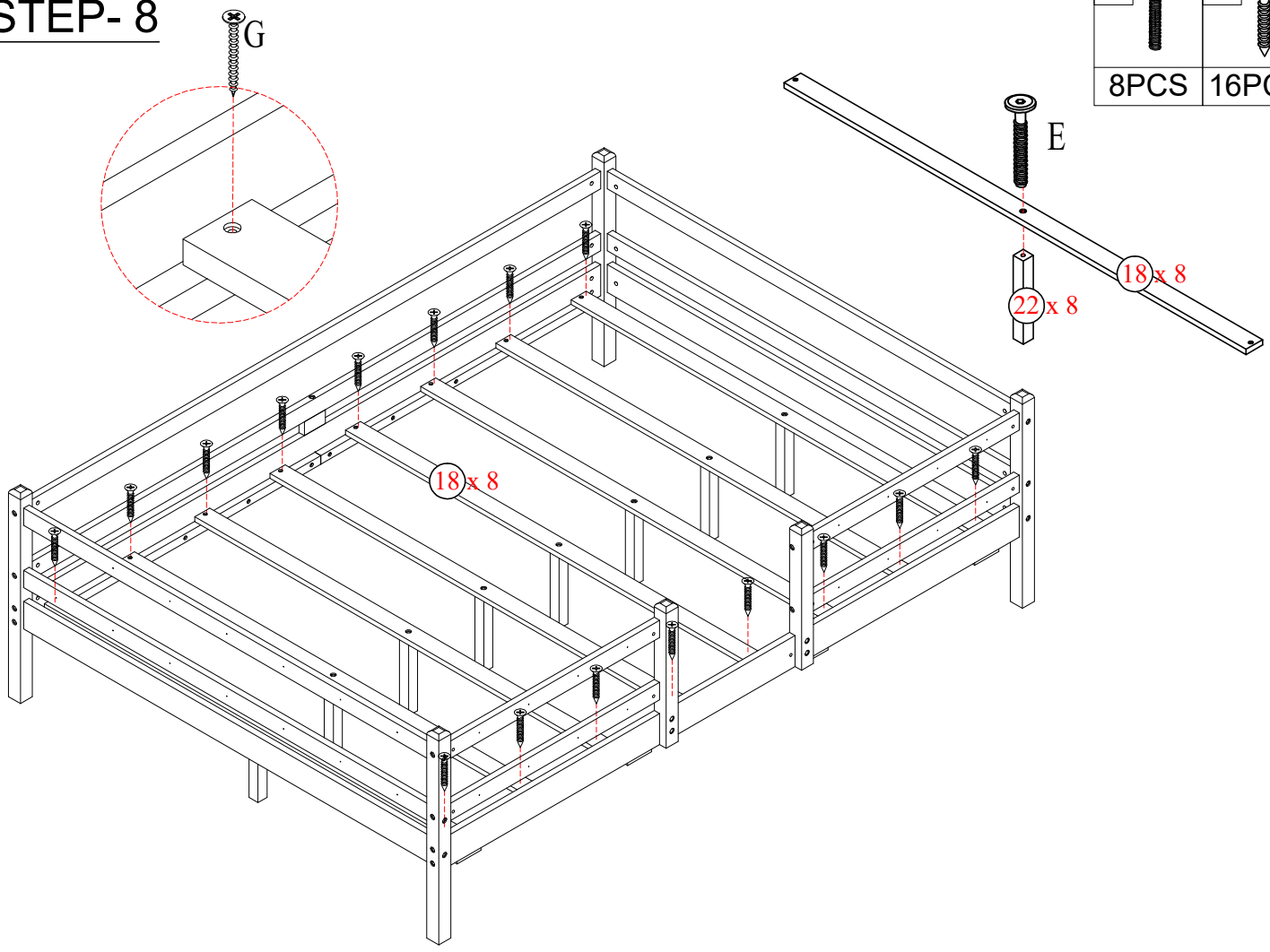

STEP- 9

P

64PCS

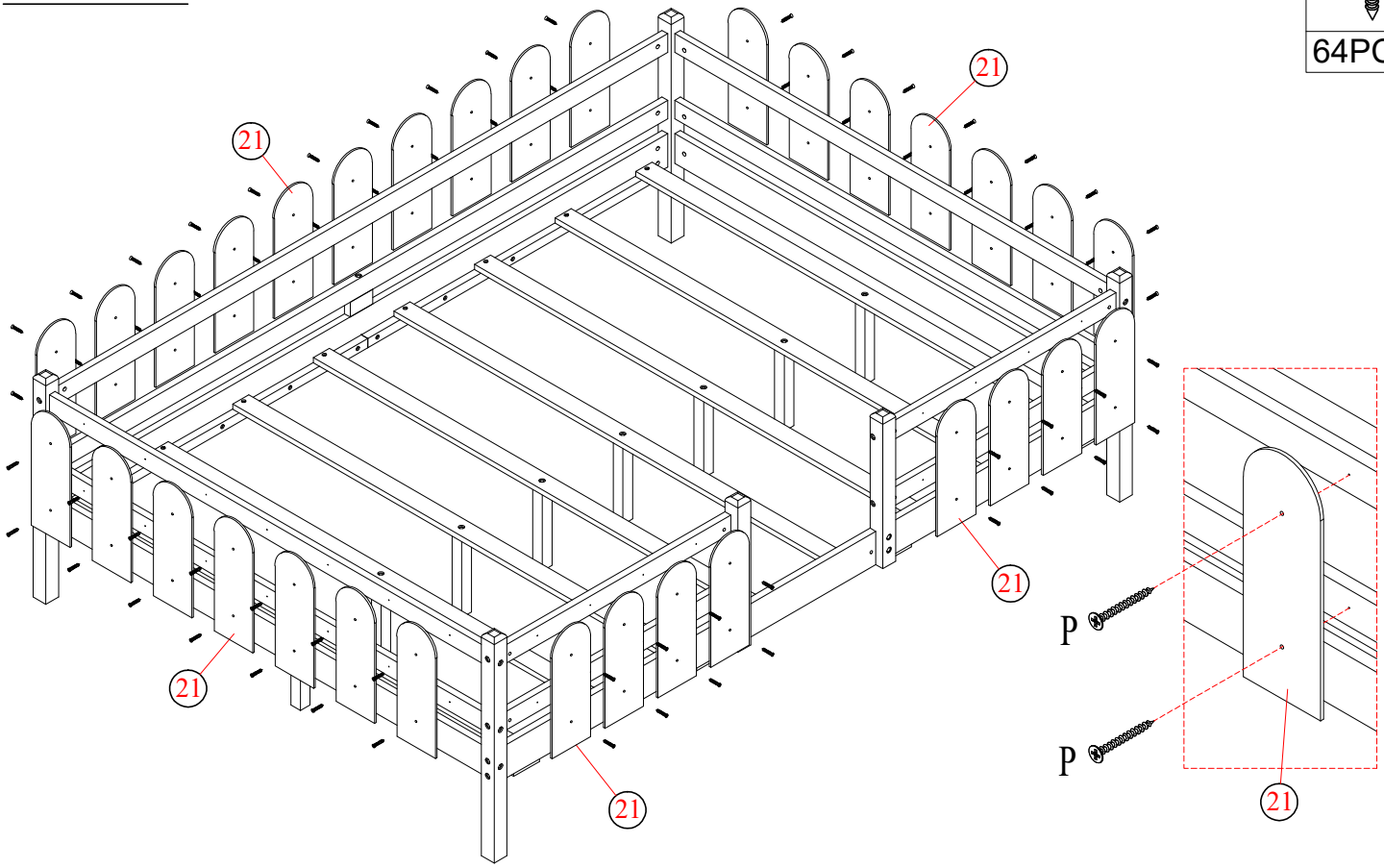

STEP- 10

B

2PCS

G

1PC

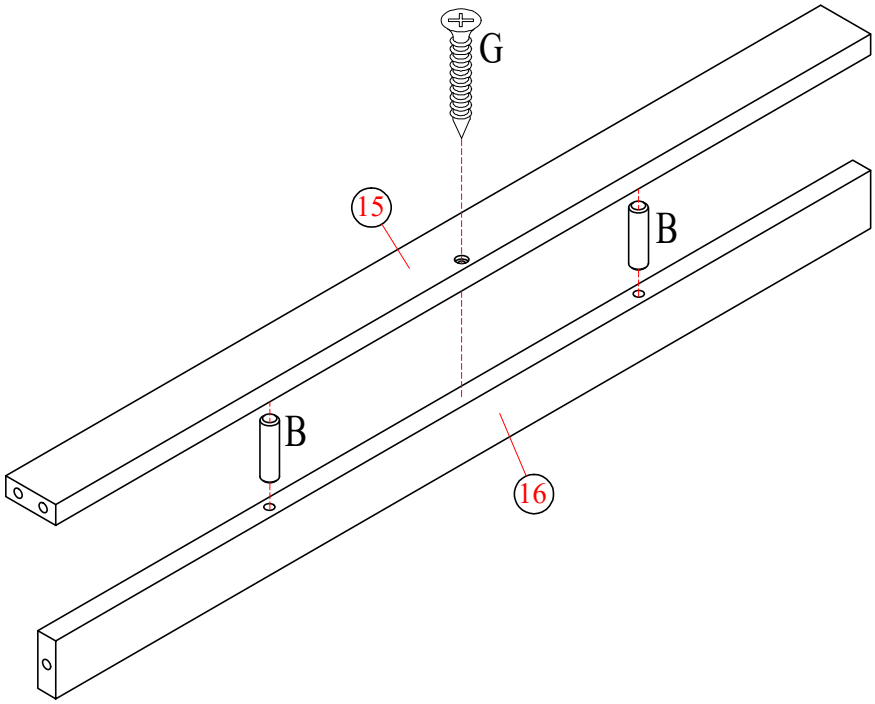

STEP- 11

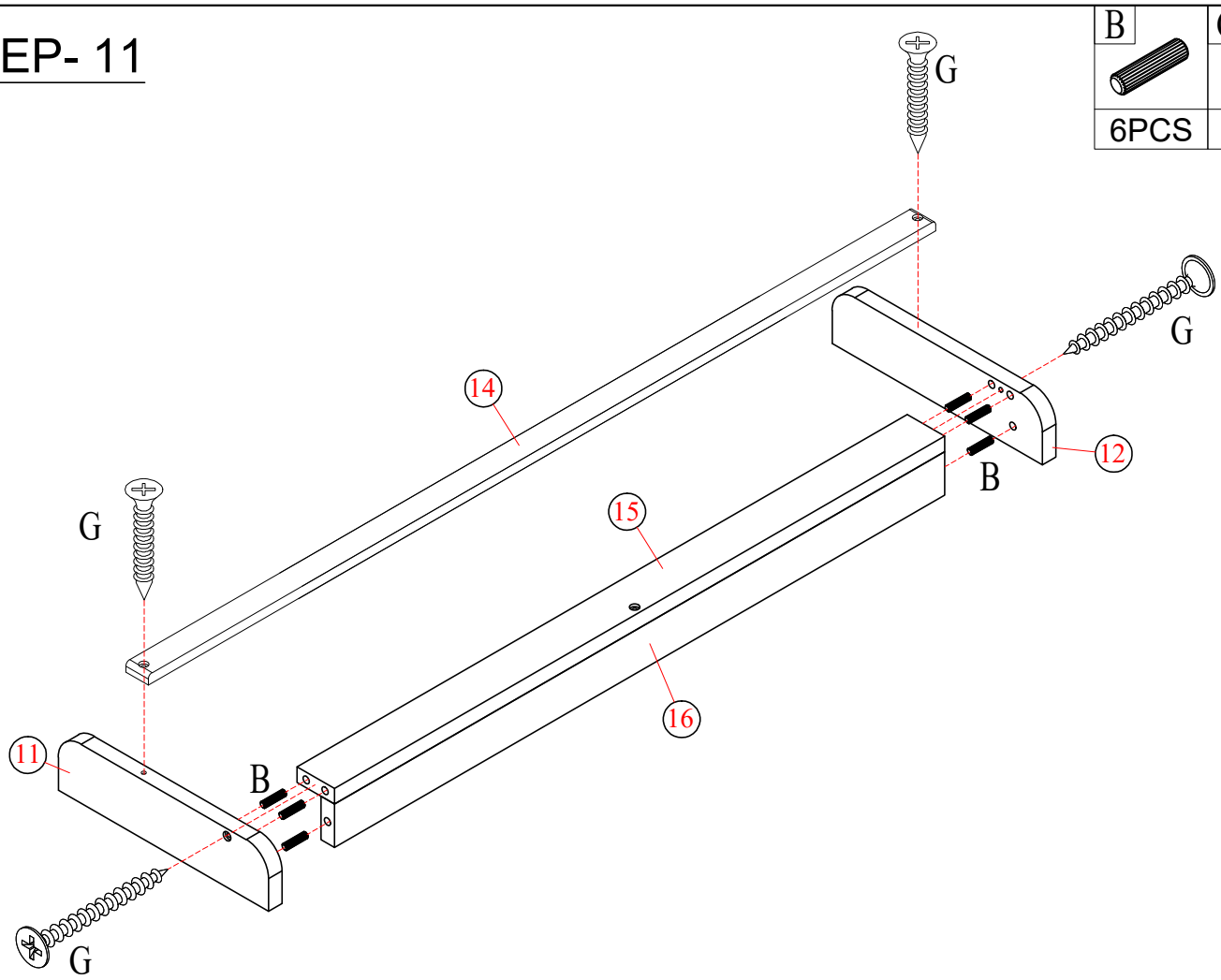

STEP- 12

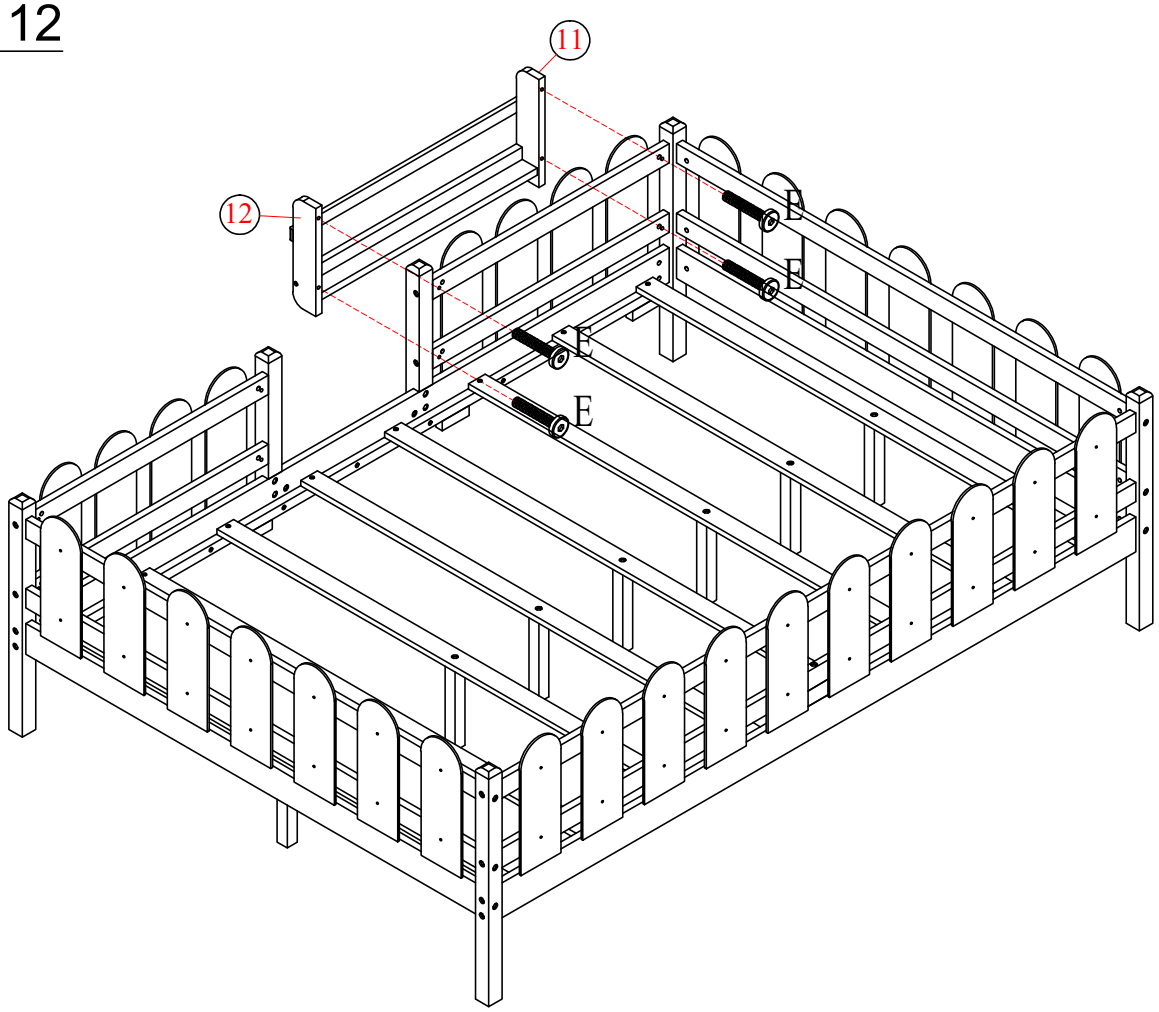

STEP- 13

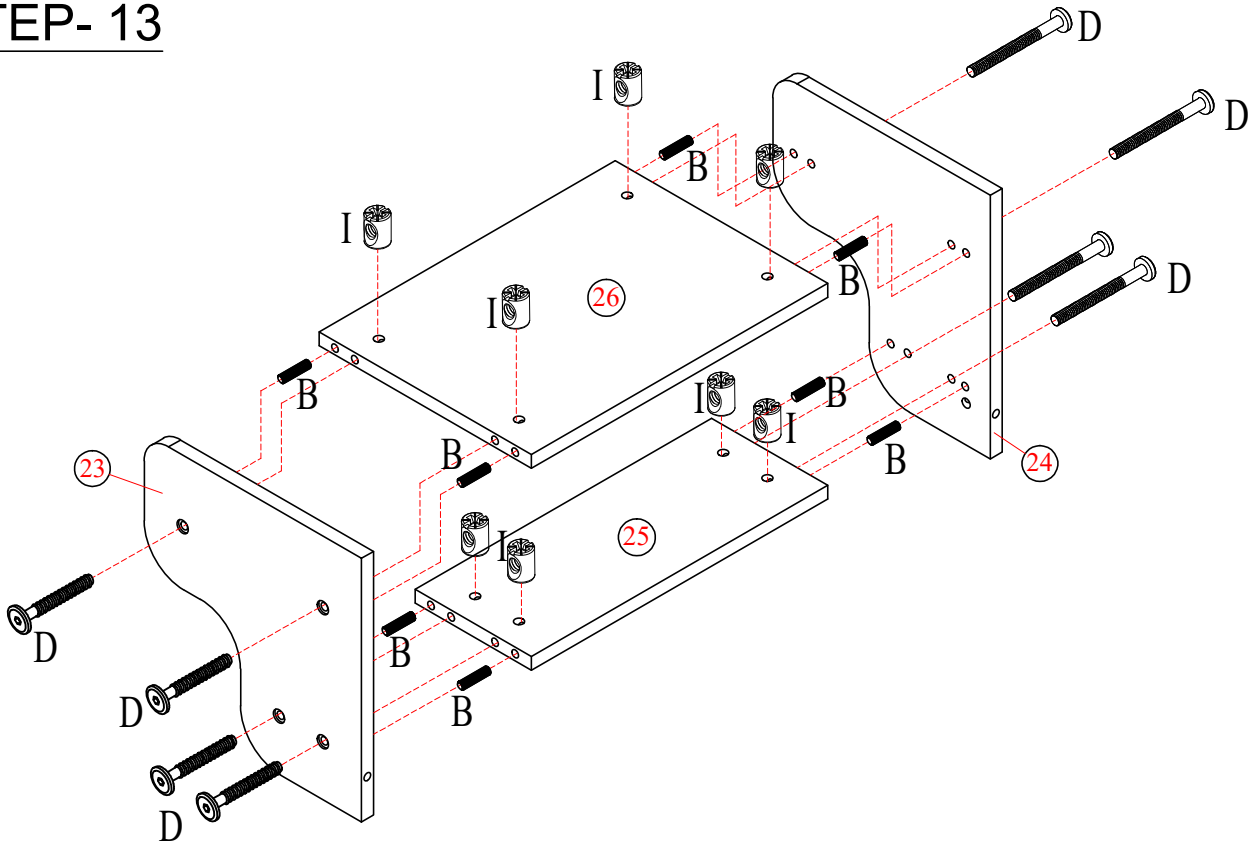

B	D	I
8PCS	8PCS	8PCS

STEP- 14

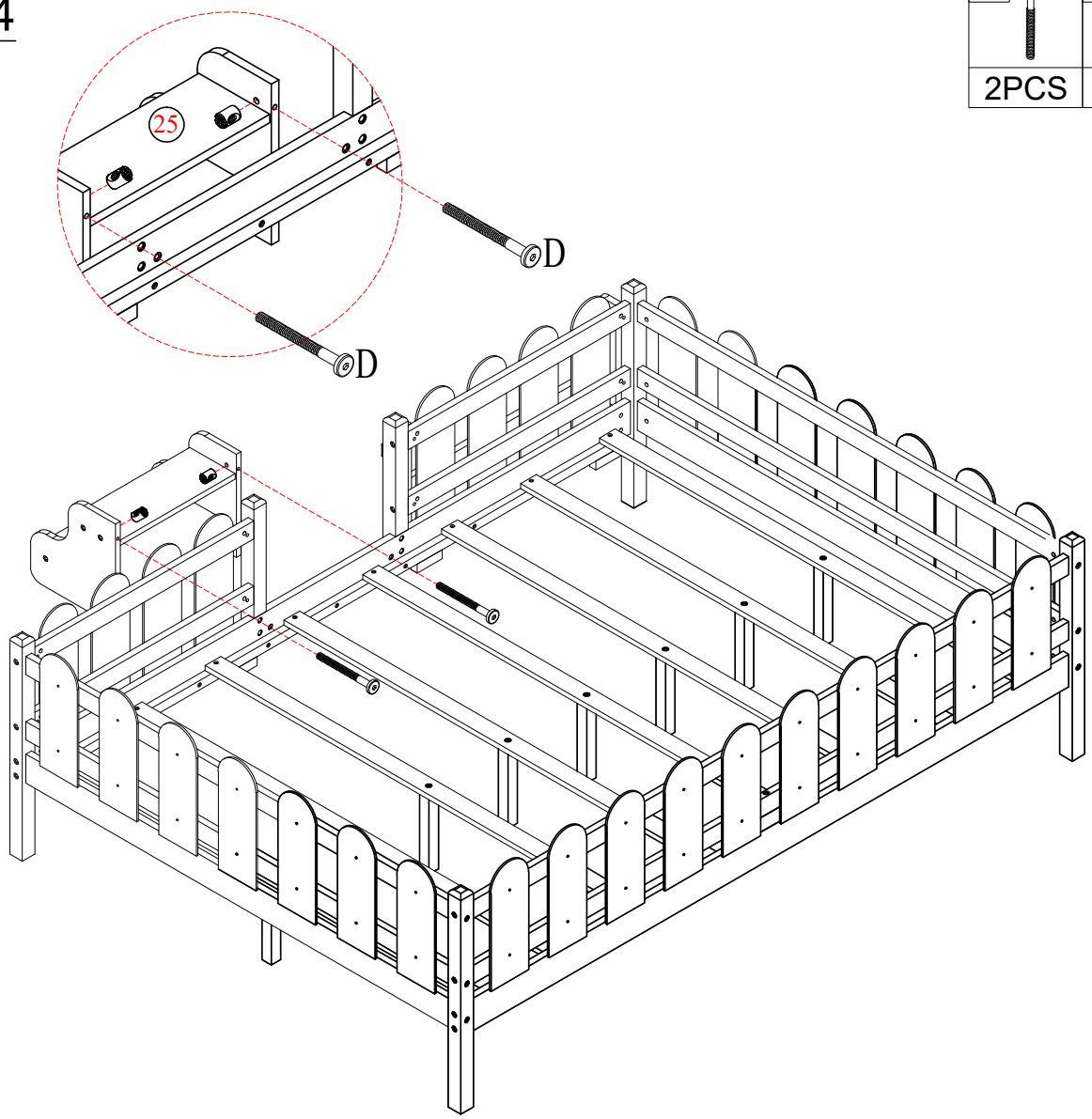

D	I
2PCS	2PCS

STEP- 15

K
16PCS

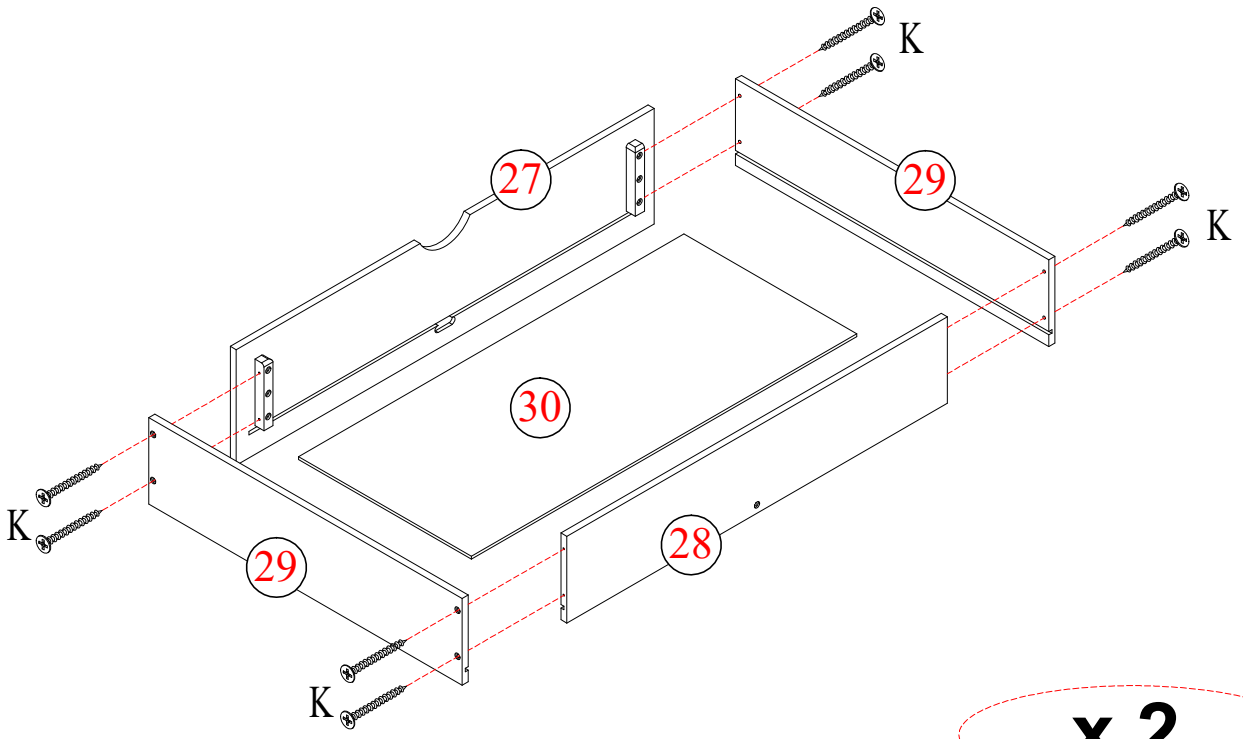

x 2

STEP- 16

L	M	K
2PCS	4PCS	2PCS

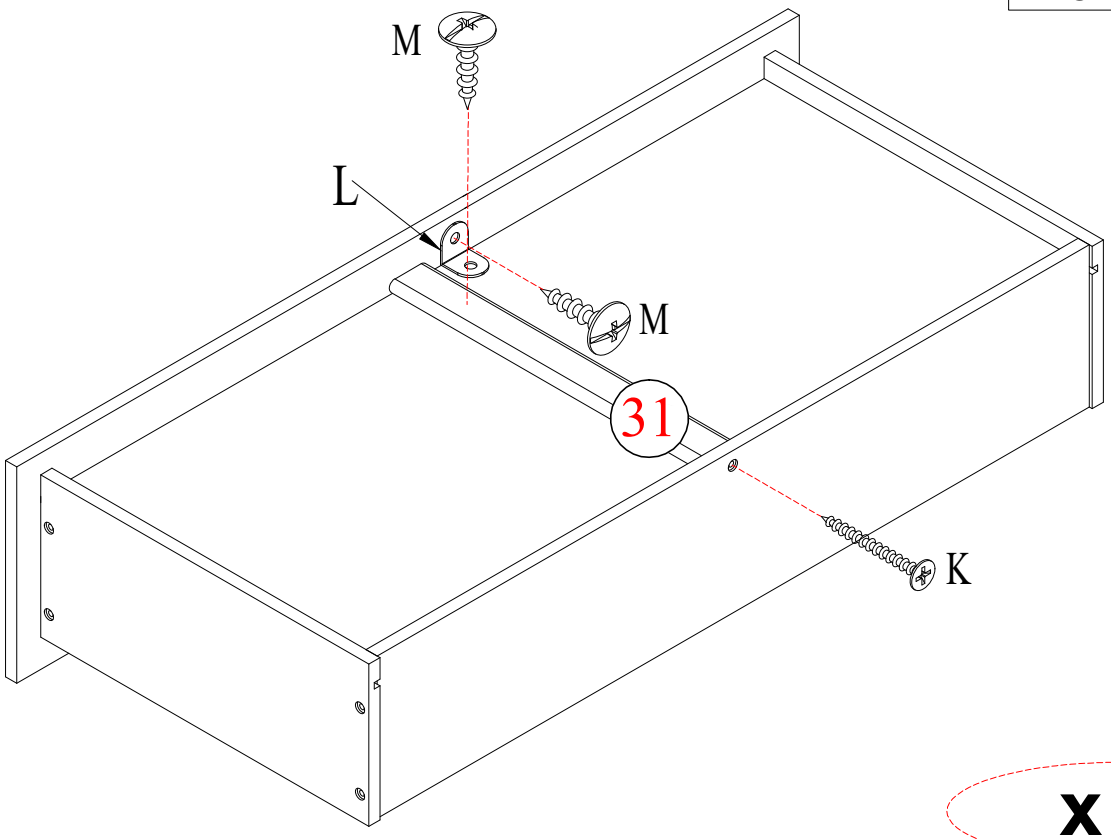

x 2

STEP- 17

M	J
32PCS	8PCS

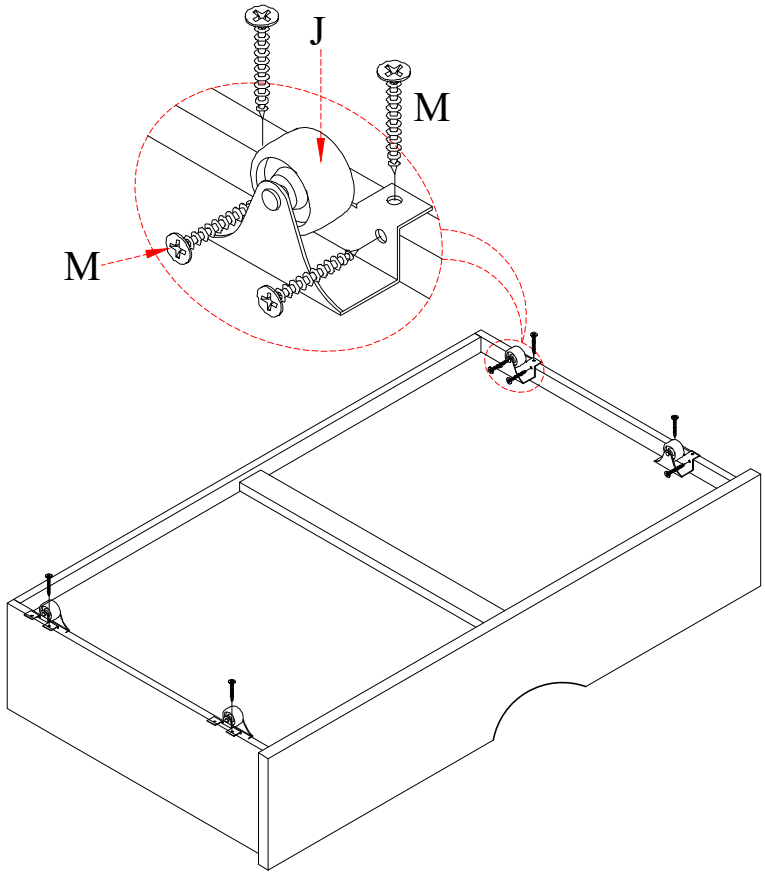

x 2

STEP- 18

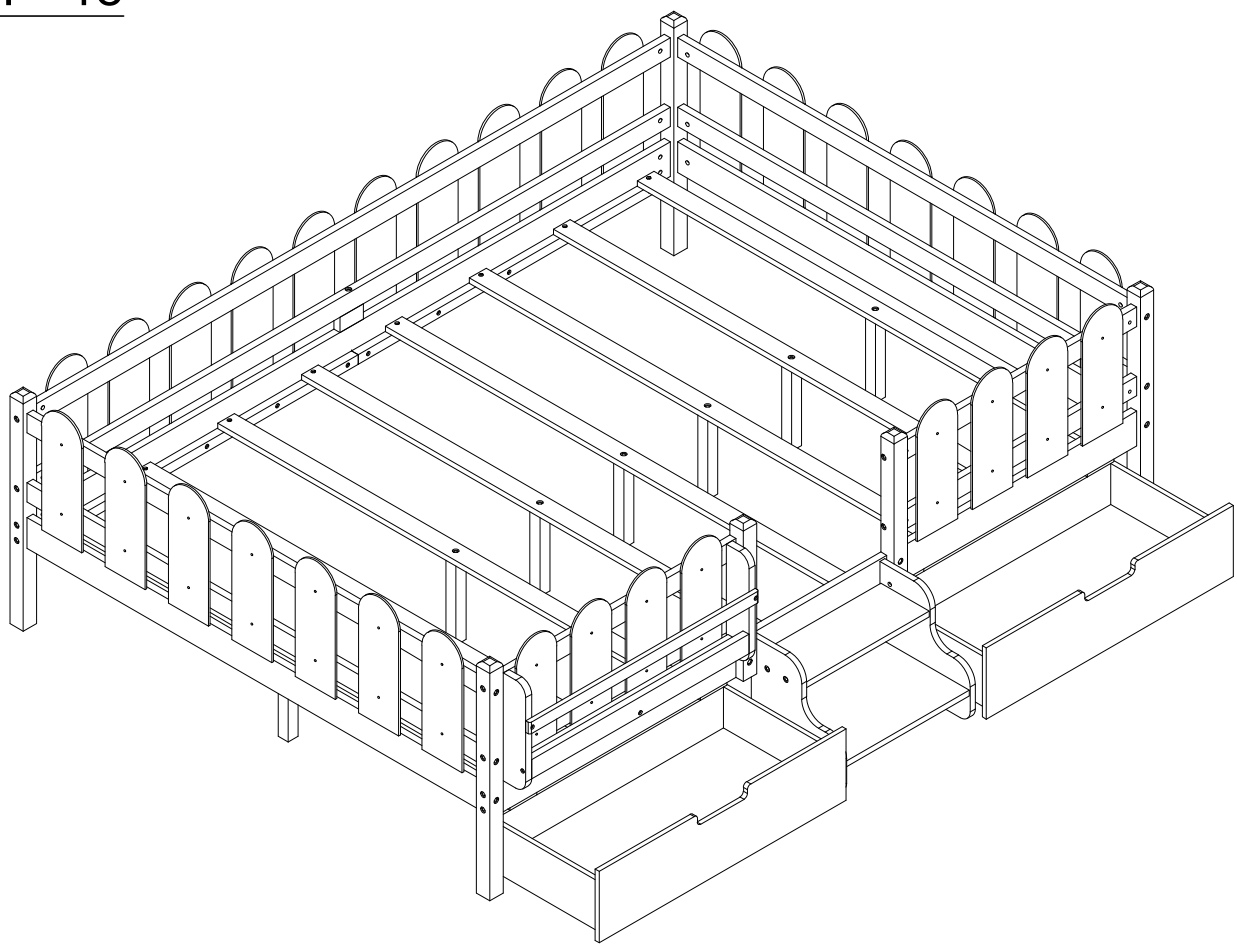

STEP- 19

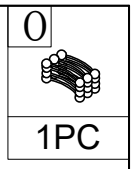

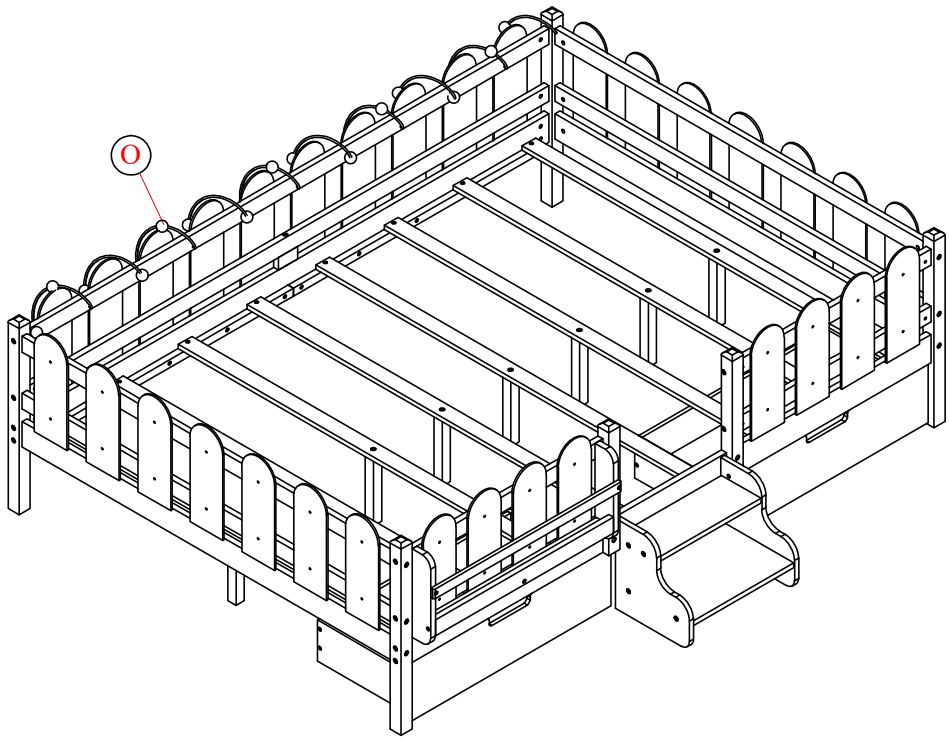

ASSEMBLY COMPLETED

