GDLF®

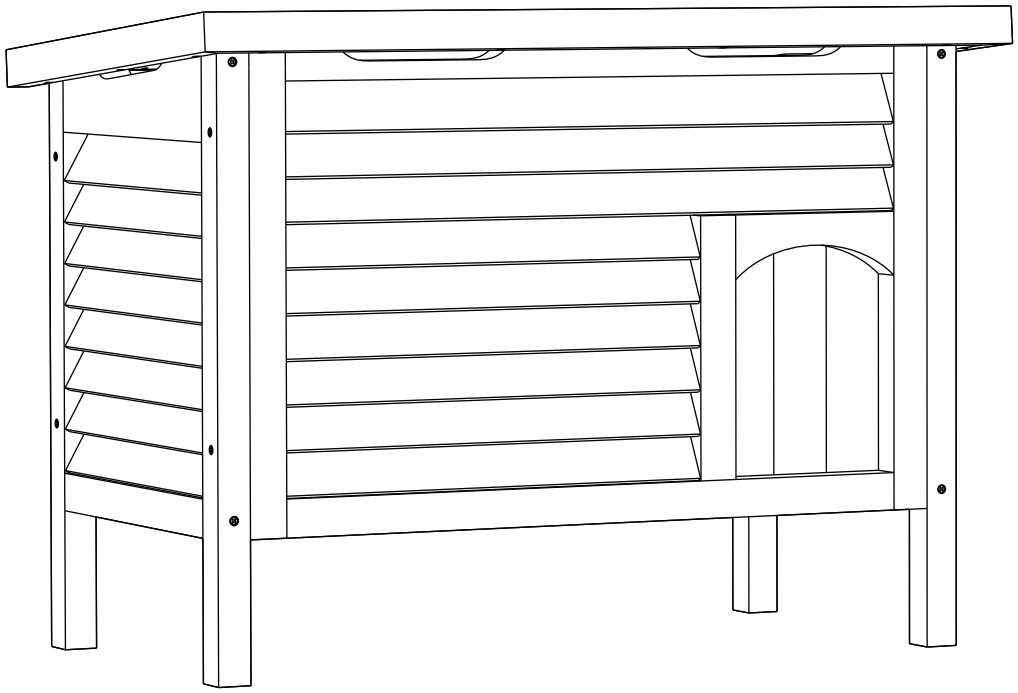

Summer

Outdoor Cat House

Assembly Instructions PET776

NOTE: This product is made of real solid fir wood, when you first open the package there may be a distinct smell of wood. But please rest assured that this is safe and is the smell of the wood itself. For your and your cat's best experience, we strongly recommend ventilating the product parts outdoors for about 3 days before assembling and using it to minimize the impact of the smell.

Panel List

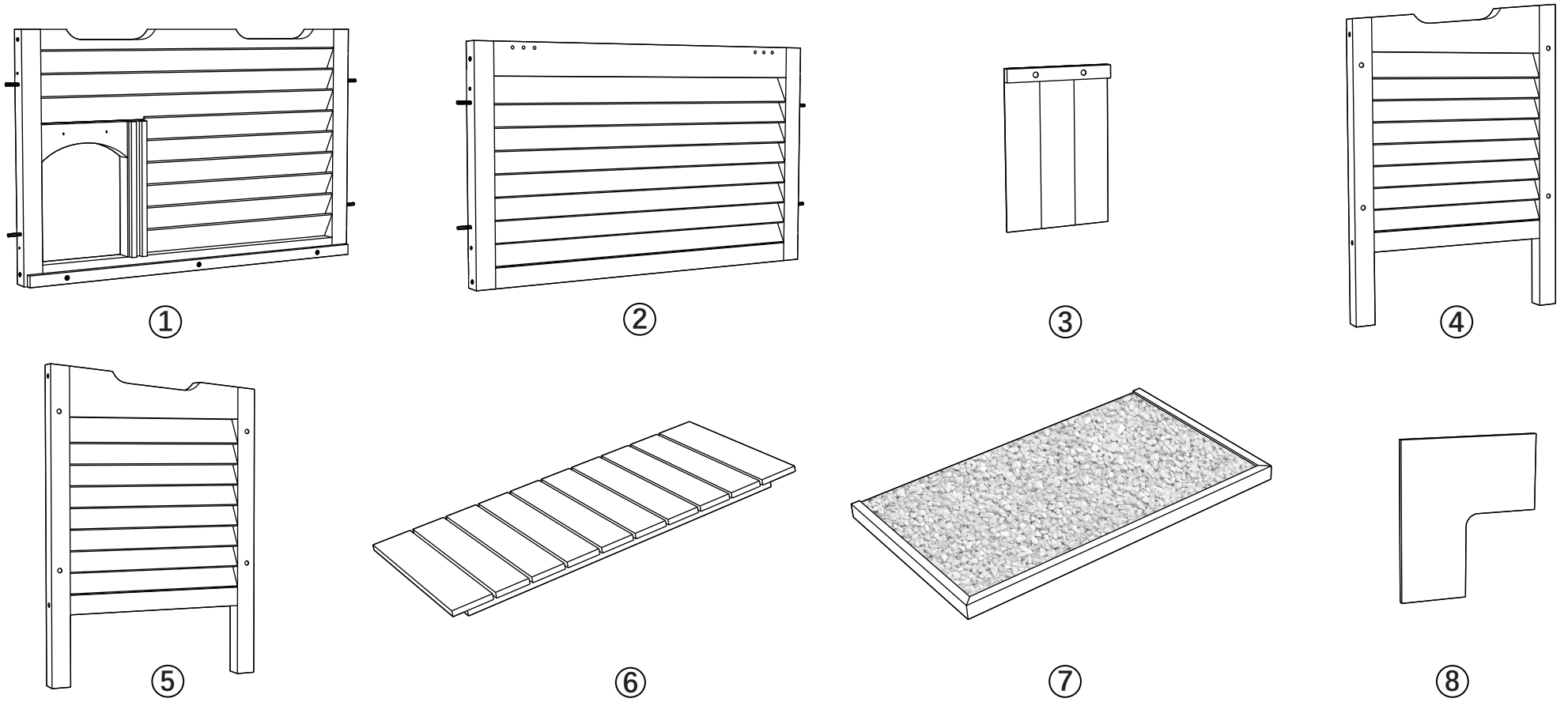

Hardware List

A		M3.5*50	8+1PCS	B	M3.0*30	2+1PCS
C		M3.0*18	14+1PCS	D	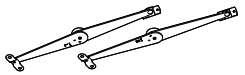	1SET

1 Attach door flaps (part #3) to part #1 using Screw B x2

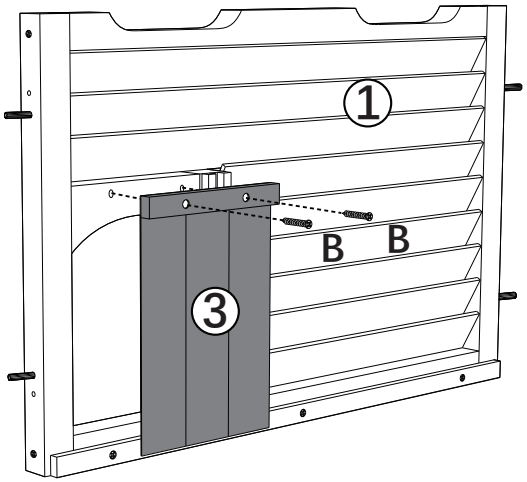

B×2



2 Line up part #1 between parts #4 & #5 as shown - slide together.

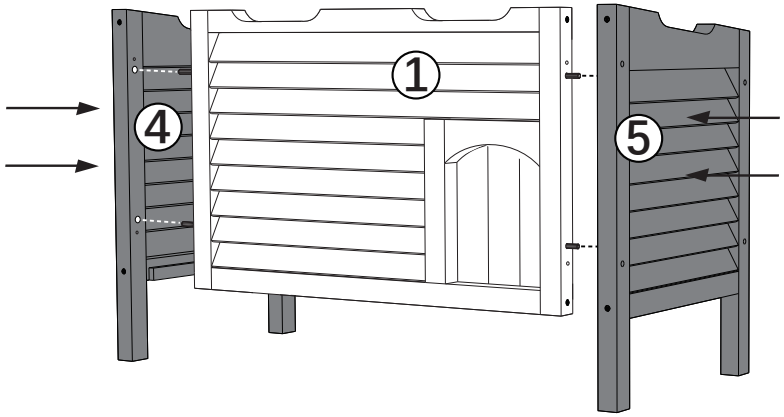

3 Attach part #1 to part #4 & #5 with screws A x4

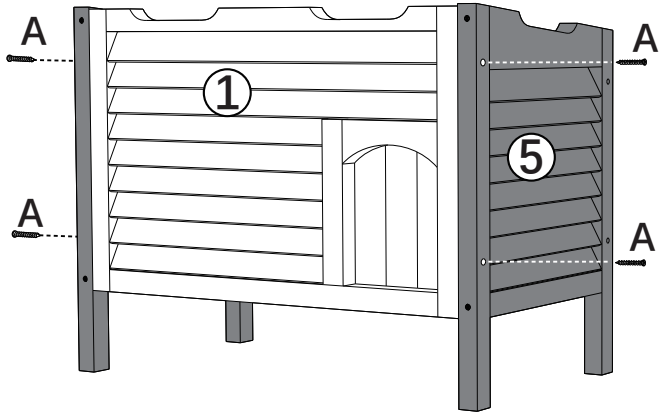

A×4



4 Slide floor part #6 down into assembled unit as shown

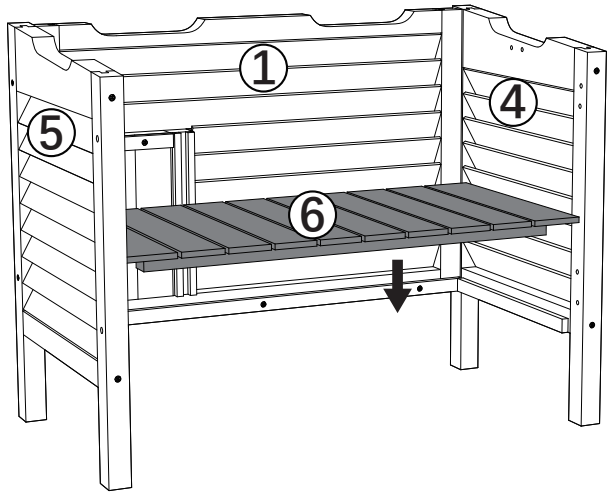

5 Attach part #2 to assembled unit using screws A x4 as shown.

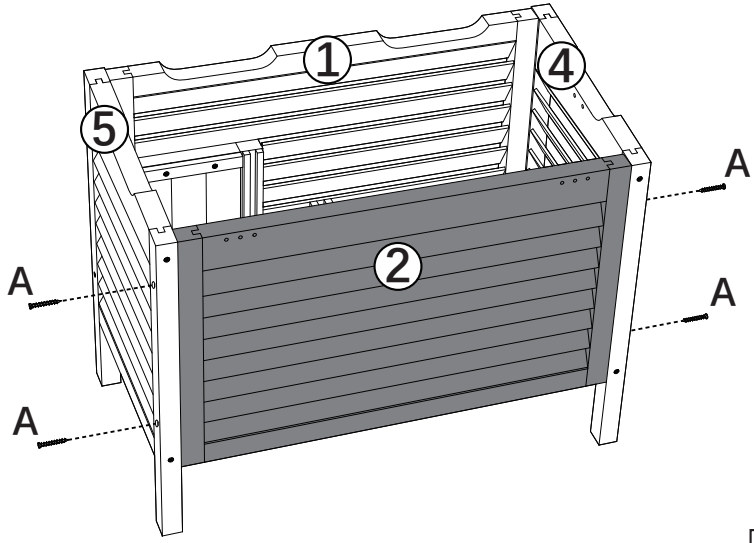

A×4



6 Slide divider part #8 into assembled unit as shown

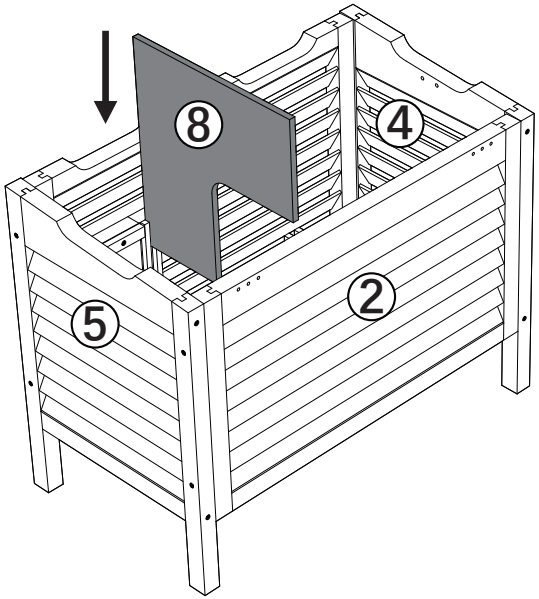

7 Attach roof part #7 to assembled unit with Hinges using screw C (x3 per hinge)

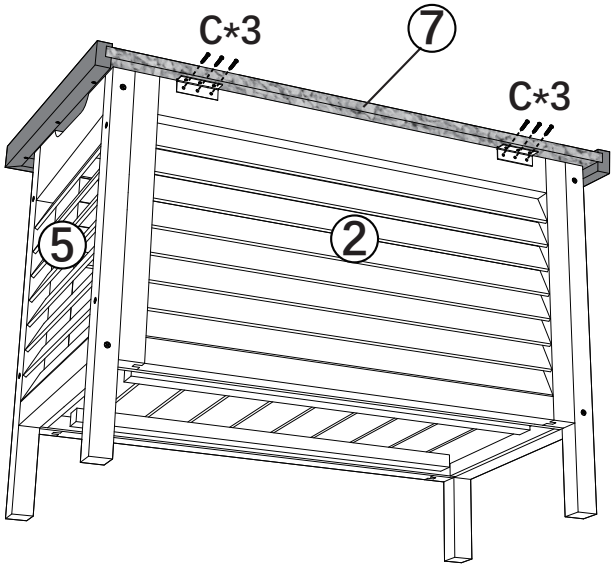

C×6


8 Attach Part D to the left side of house and roof of house as shown using screws C x2. Be sure to follow the guides in both diagrams for side (left/right) orientation and hole alignment.

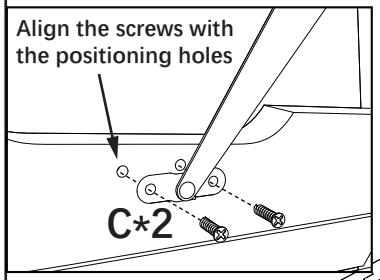

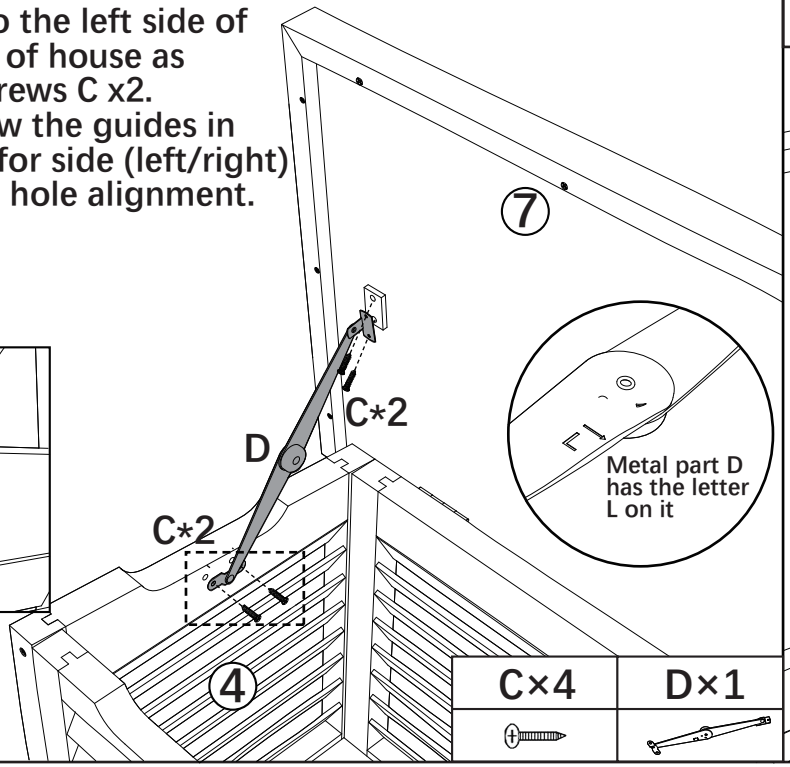

C×4	D×1

9 Repeat step 8 on the right side for 2nd part D.

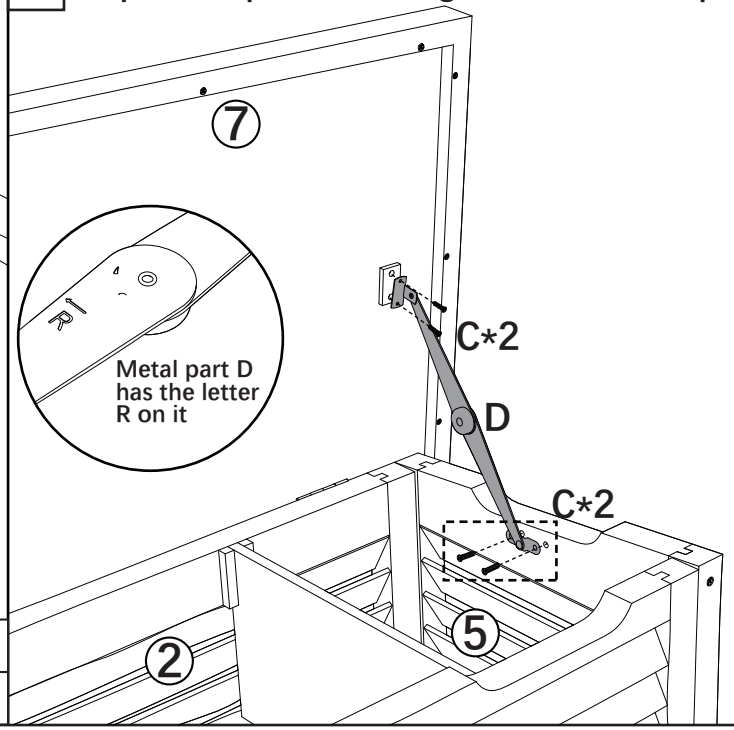

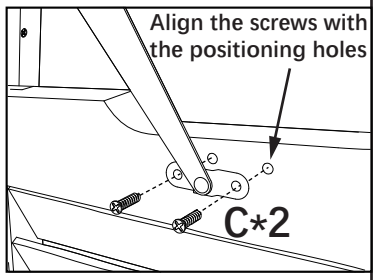

C×4	D×1
	

10 When opening the roof, keep the metal parts D in a straight line. These metal parts D support the roof and can keep it in an open position.

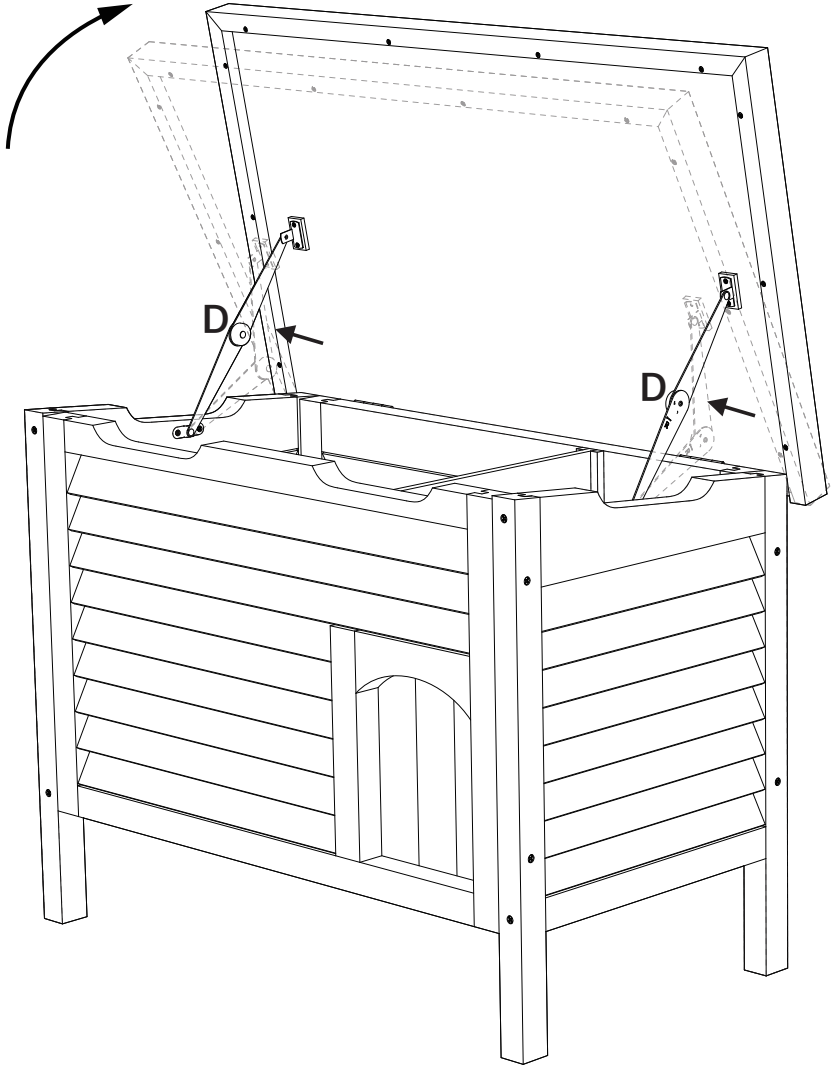

11 To close the roof, push the middle joints of the two metal parts D inward. This will allow you to close the roof as Parts D will no longer be locked in to support the roof in open position.

