ITEM NO.	DESCRIPTION	QTY.
1	Base	2
2	SUPPORT	2
3	Glass	1

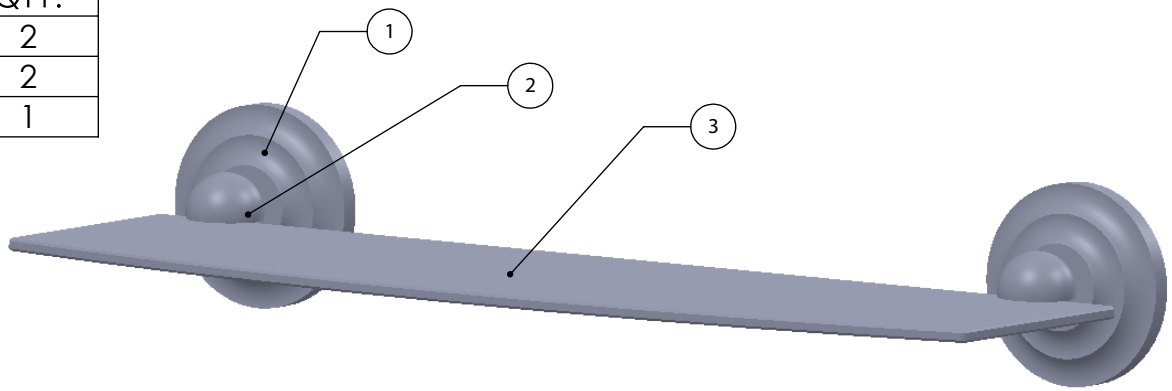

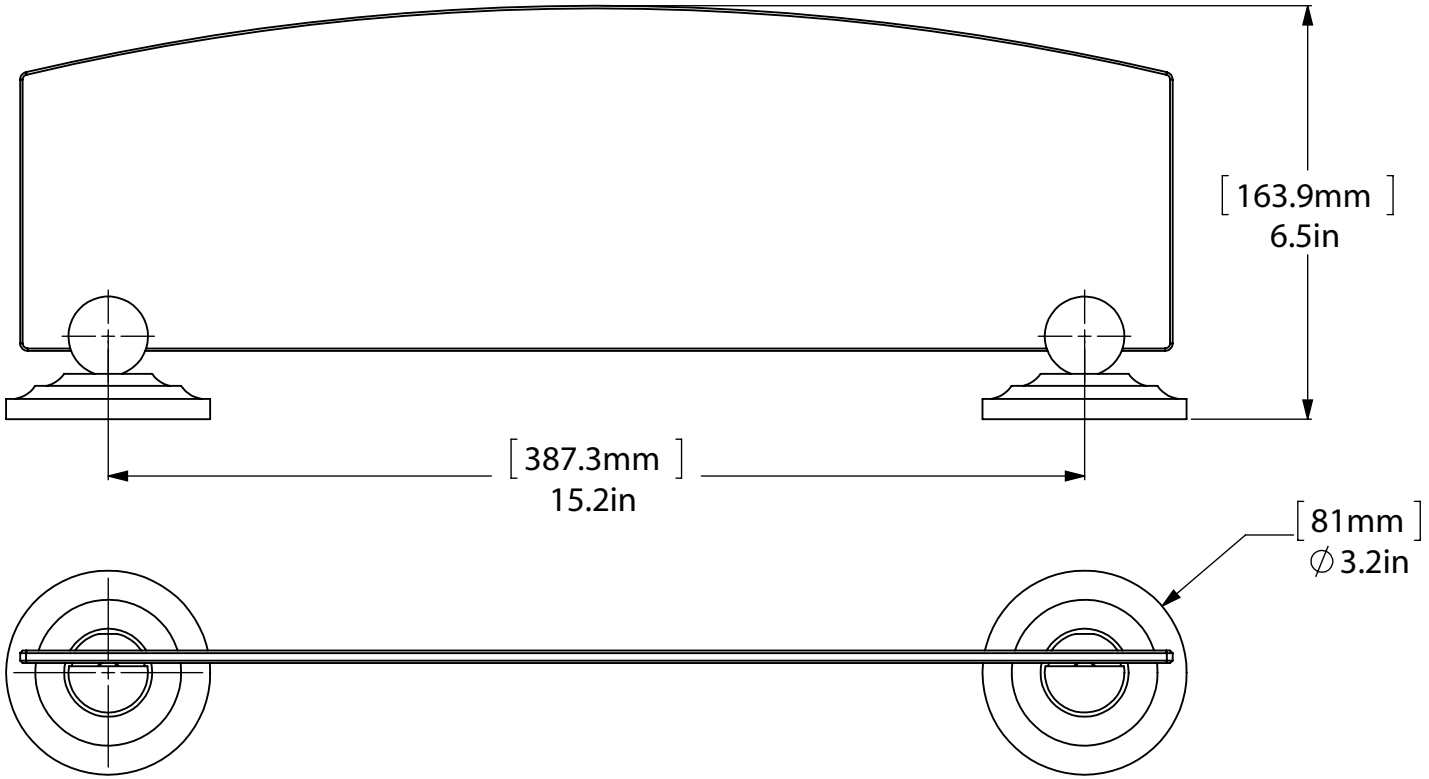

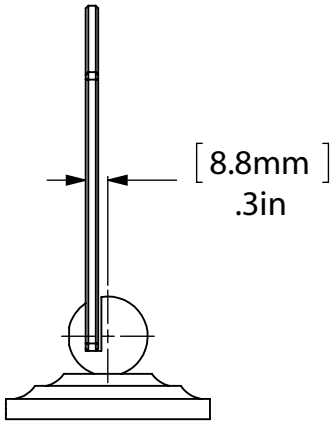

UNLESS OTHERWISE STATED			INITIALS	DATE	ITEM	QTY	DRG/PART NO	CLIENT:			
DO NOT SCALE DRAWING	X.XXX	+/-0.025	DESIGNED		IJM	MATERIAL	BRASS	WEIGHT		FINISH	TBD
CHAMFER ALL EDGES 0.5X45°	X.XX	+/-0.1	DRAWN		IJM	HEAT TREAT	NA			QUANTITY	
	X.X	+/-0.25	CHECKED		R. ANDRIS	CUSTOMER		CUSTOMER No		---	
DRAWING ISO	X	+/-0.75	PROJ.ENG			DESCRIPTION:					REV
	ANGLES		SAFETY								0
	X.XX	+/-0.05°	APPROVED		R. ANDRIS						
	X.X	+/-0.1°								SCALE 1:3	SHEET: 01 A4
	X	+/-0.5°									
FIRST ANGLE PROJECTION	MACHINED FINISH	3.2									