US39

DIMENSIONS

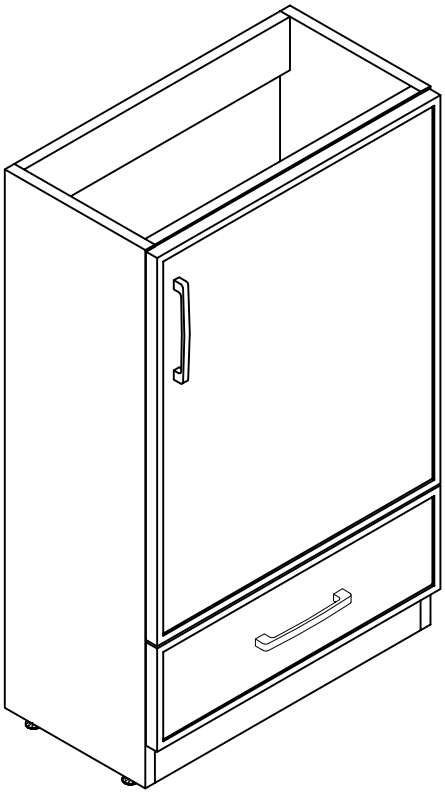

YOU MAY NEED (NOT SUPPLY)

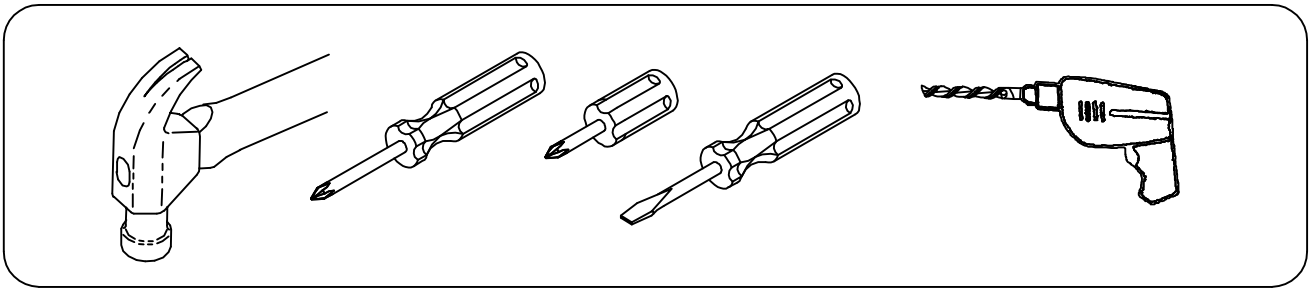

ASSENBLY DIAGRAM

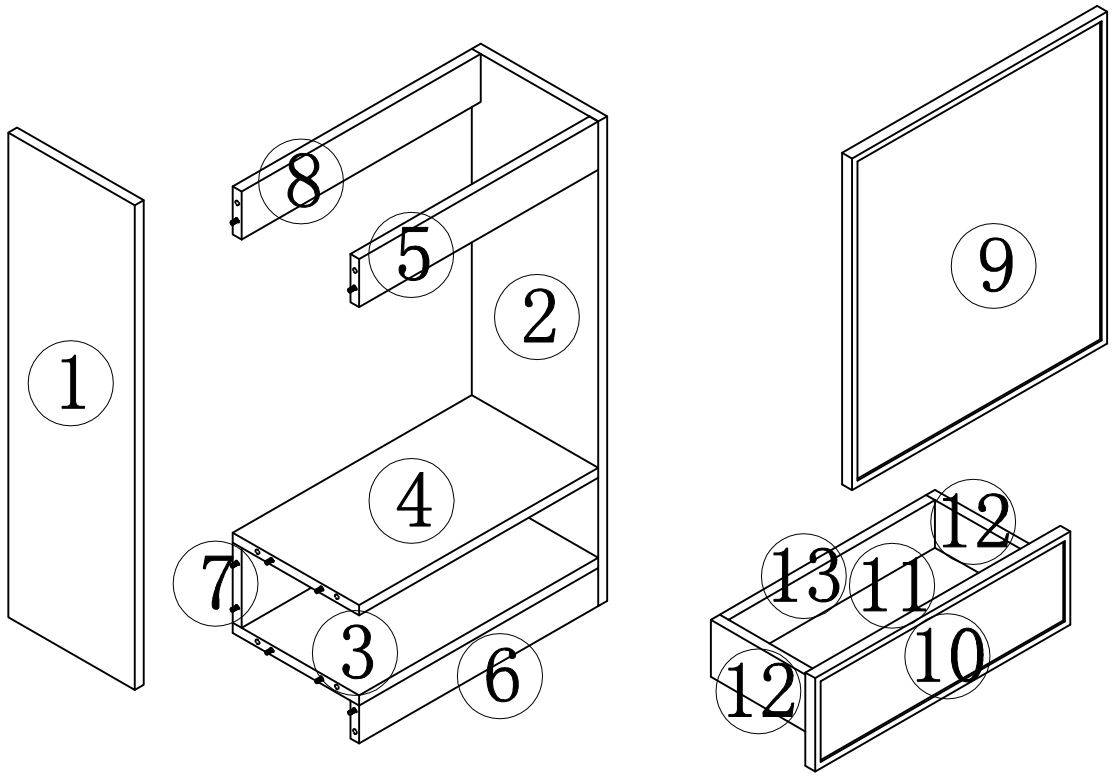

PARTS LIST

PARTS LIST

NO	DESCRIPTION	QTY	NO	DESCRIPTION	QTY
①	Left side panel	1	⑧	rear pull-up bar	1
②	Right side panel	1	⑨	Right door panel	1
③	Bottom panel	1	⑩	drawer panel	1
④	laminate	1	⑪	drawer bottom	1
⑤	front pull-up	1	⑫	drawer side panel	2
⑥	Front bottom bar	1	⑬	drawer back panel	1
⑦	rear drop down	1			

PARTS LIST

HARDWARE LIST

NO	DESCRIPTION	QTY	NO	DESCRIPTION	QTY
A	Three-in-one eccentric wheel	26	F	4*16mm screw	24
B	Three-in-one connecting rod	26	G	4*20mm screw	4
C	Three-in-one sticker	26	H	Door handle	1
D	8*40mm wood dowel pins	18	I	Drawer handle	1
E	Drawer slides	2	J	Door hinge	2

CAUTION:

Please confirm the parts list before installation

STEP 1

HARDWARE LIST	
Three-in-one connecting rod B 26PCS	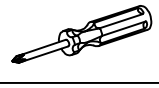

1.Put the three-in-one connecting rod in the 10mm hole of the following panels and tighten them with a cross screwdriver or an electric tool.

STEP 2

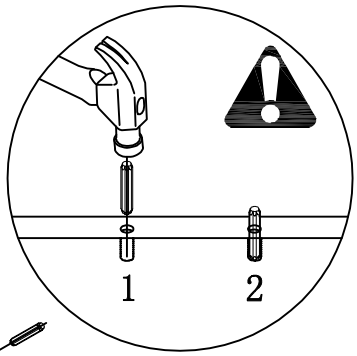

1.Strike the 08*40mm wood dowel pin into the 8m hole of the above panels with an iron hammer. Please note that the hole of the three-in-one connecting rod should also be 8mm. The hole of the three-in-one connecting rod connects to the hole of 15mm three-in-one eccentric wheel.

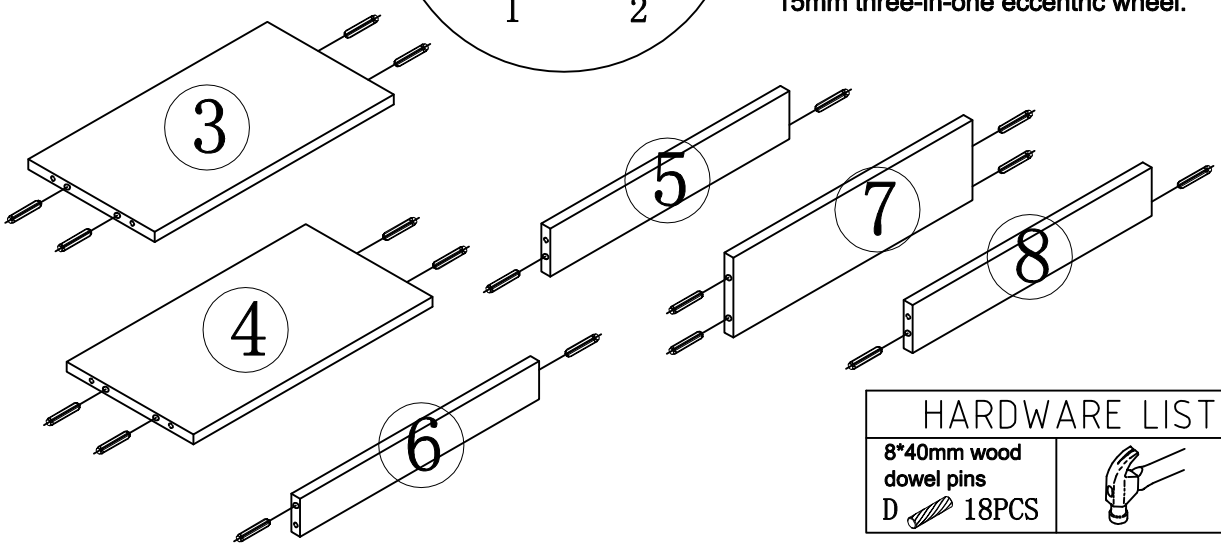

HARDWARE LIST	
8*40mm wood dowel pins D 18PCS	

STEP 3

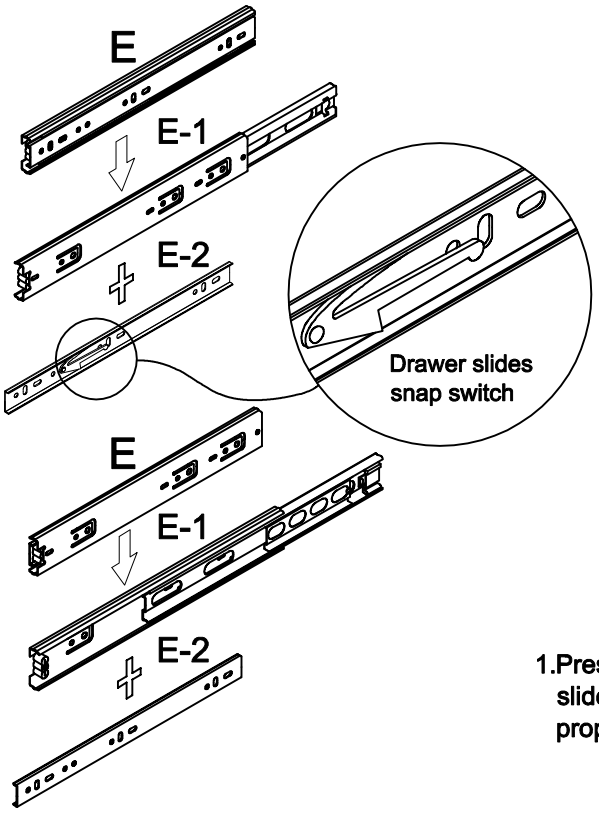

HARDWARE LIST	
Drawer slides E 2PCS	

1.Press the slide snap switch, disassemble slide blocks and put them in a place properly for further use.

STEP 4

1.Fix the drawer slide to the side panel with 4*16mm screws.

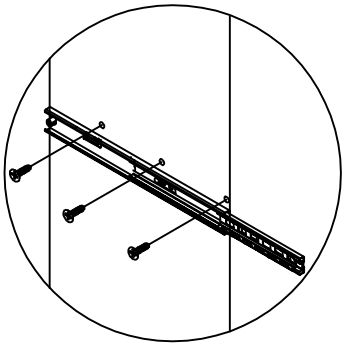

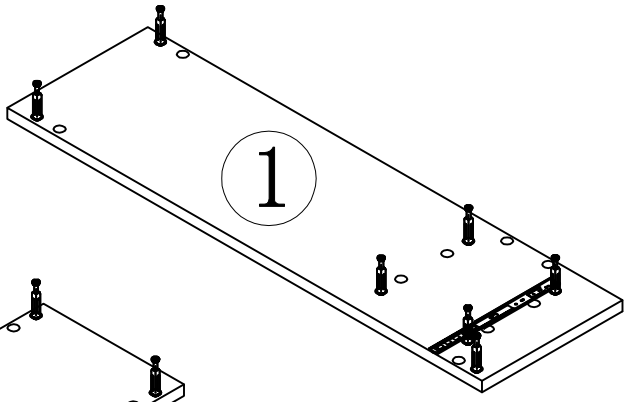

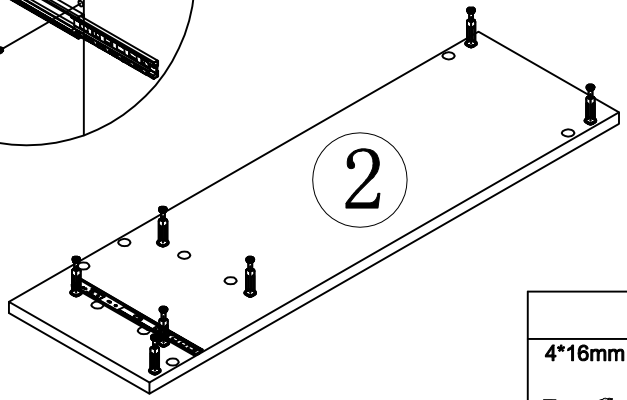

HARDWARE LIST		
4*16mm screw F 6PCS	Drawer slides E-1 2PCS	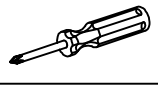

STEP 5

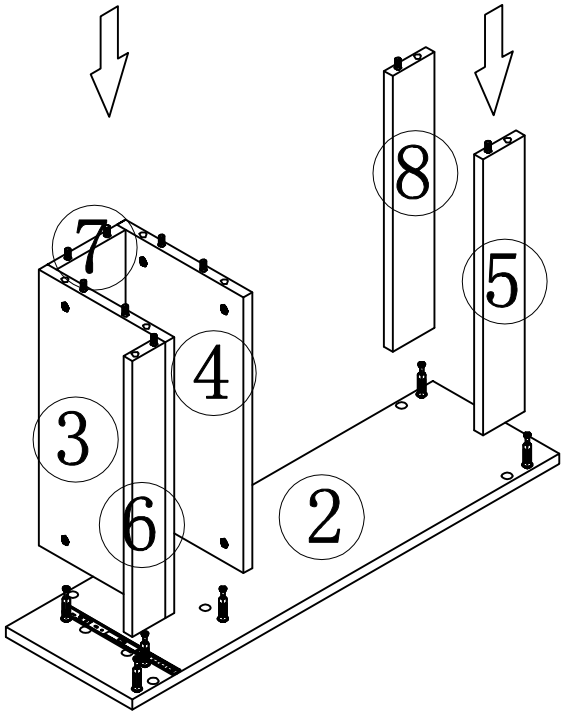

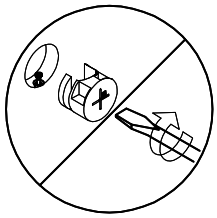

1.Connect No. 3-4-5-6-7-8 panel to No.2 panel tightly with the three-in-one eccentric wheel.

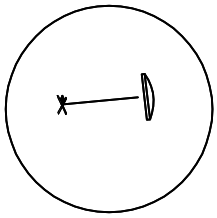

2.Cover the mounting hole of the eccentric wheel with a three-in-one sticker.

HARDWARE LIST		
Three-in-one eccentric wheel A 7PCS	Three-in-one sticker C 7PCS	

STEP 6

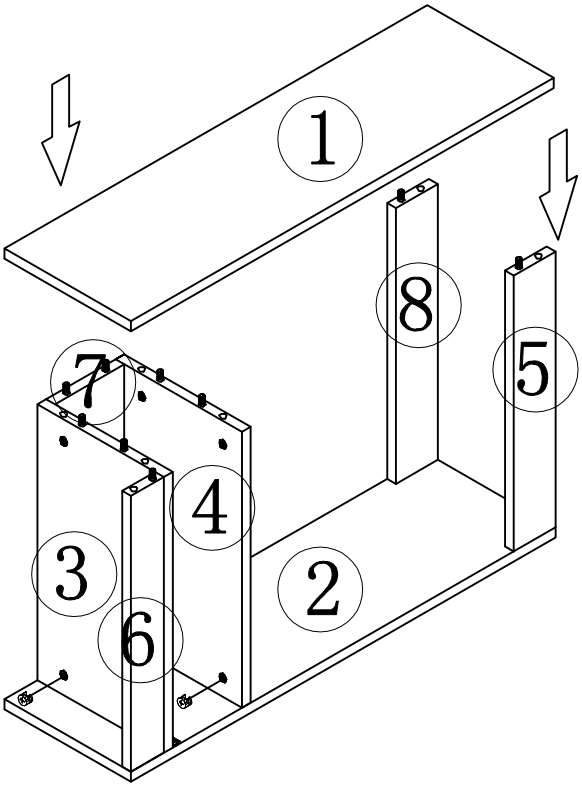

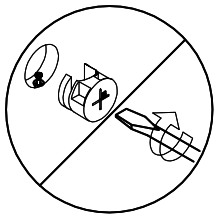

1.Connect No. 1 panel to No. 3-4-5-6-7-8 panel tightly with the three-in-one eccentric wheel.

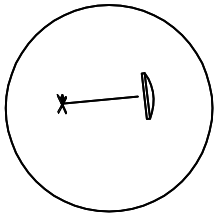

2.Cover the mounting hole of the eccentric wheel with a three-in-one sticker.

HARDWARE LIST		
Three-in-one eccentric wheel A 7PCS	Three-in-one sticker C 7PCS	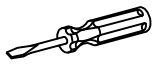

STEP 7

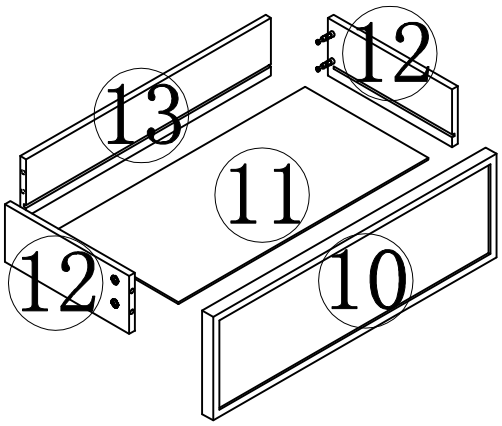

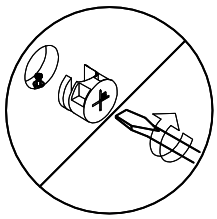

1.Install No. 11-12-13-14 panels with the three-in-one eccentric wheel tightly.

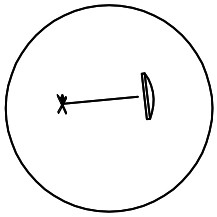

2.Cover the mounting hole of the eccentric wheel with a three-in-one sticker.

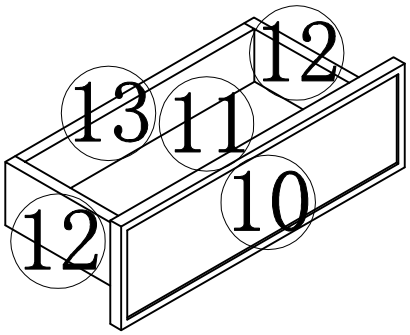

HARDWARE LIST		
Three-in-one eccentric wheel A 8PCS	Three-in-one sticker C 8PCS	

STEP 8

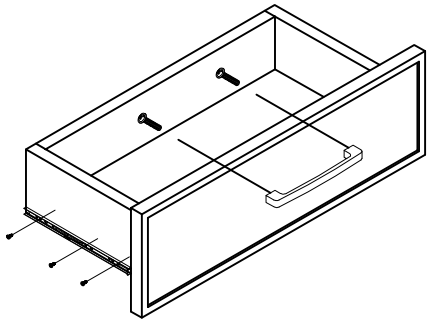

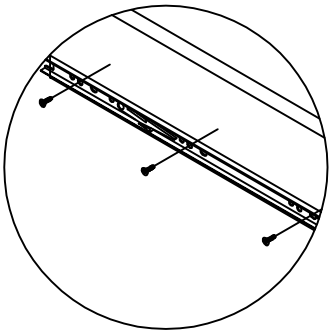

1.Lock the spare drawer slide block to the drawer.

2.Install the drawer handle with 4*20 handle screws.

HARDWARE LIST		
4*16mm screw F 6PCS	Drawer slides E-2 2PCS	
4*20mm screw G 2PCS	Drawer handle I 1PCS	

STEP 9

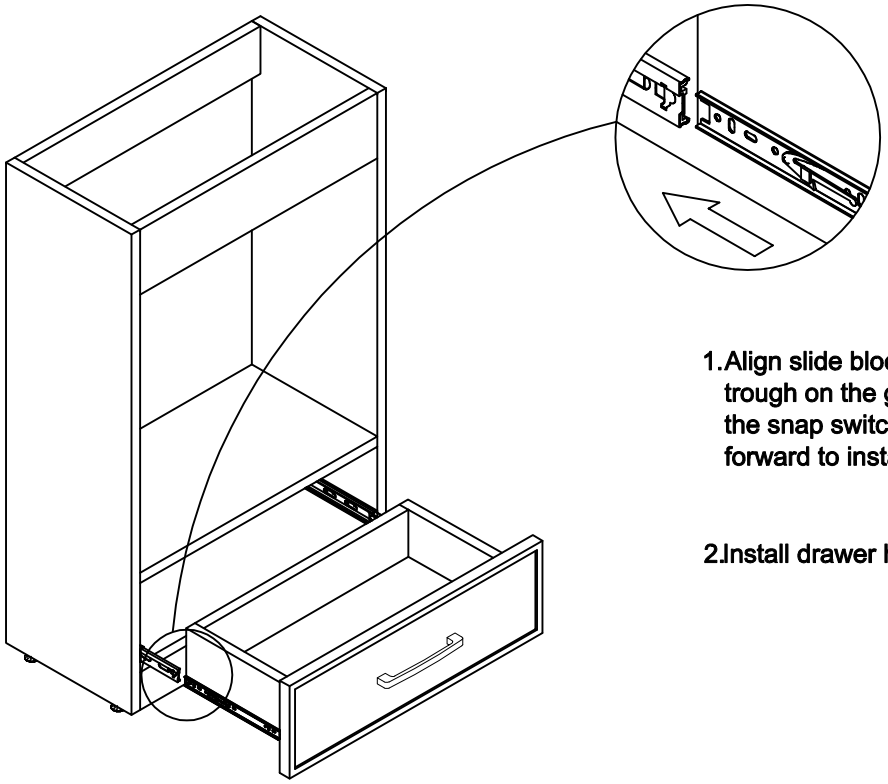

1.Align slide block with the trough on the guide rail, press the snap switch and press it forward to install the drawer.

2.Install drawer handles.

STEP 10

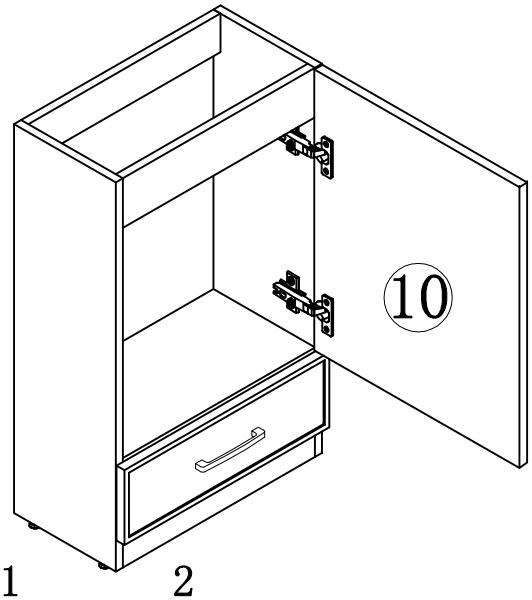

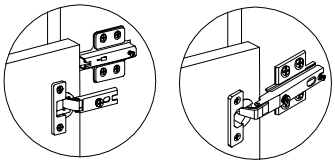

3.Install the hinge cup on the door panel to the hinge of the side panel.

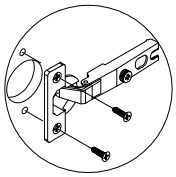

1.Install the hinge cup to the door panel with 4*16mm screws.

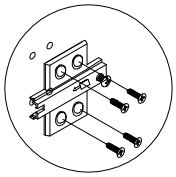

2.Install the hinge to the side panel with 4*16mm screws.

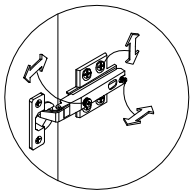

4.Adjust the door panel clearance.

HARDWARE LIST		
4*16mm screw	Door hinge	
F 12PCS	K 2PCS	

STEP 11

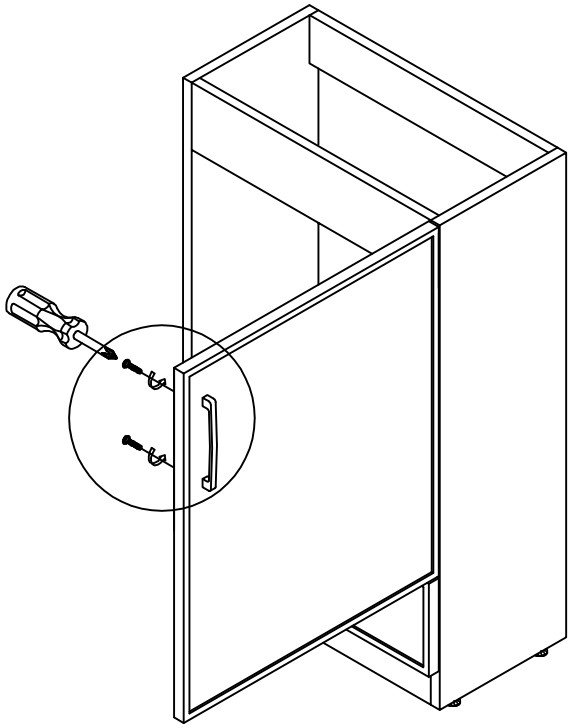

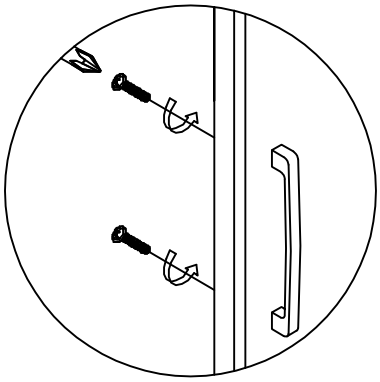

1.Install the door handle with 4*20handle screws.

HARDWARE LIST		
4*20mm screw	**Door handle**	
G 2PCS	H 1PCS	



Choking hazard-Small Parts： This unit contains small parts，not for children under 3 years.

Tip-over hazard： Secure finished unit to wall stud using L-Bracket and wall screw（#10*1.5"W/out provided). If a wall stud is not neccessible , Consault your local hardware store for appropriate mounting hardware . Failure to properly install will result in product collapse or tip-over. Serious injury can occur .