DJ0288-170CM

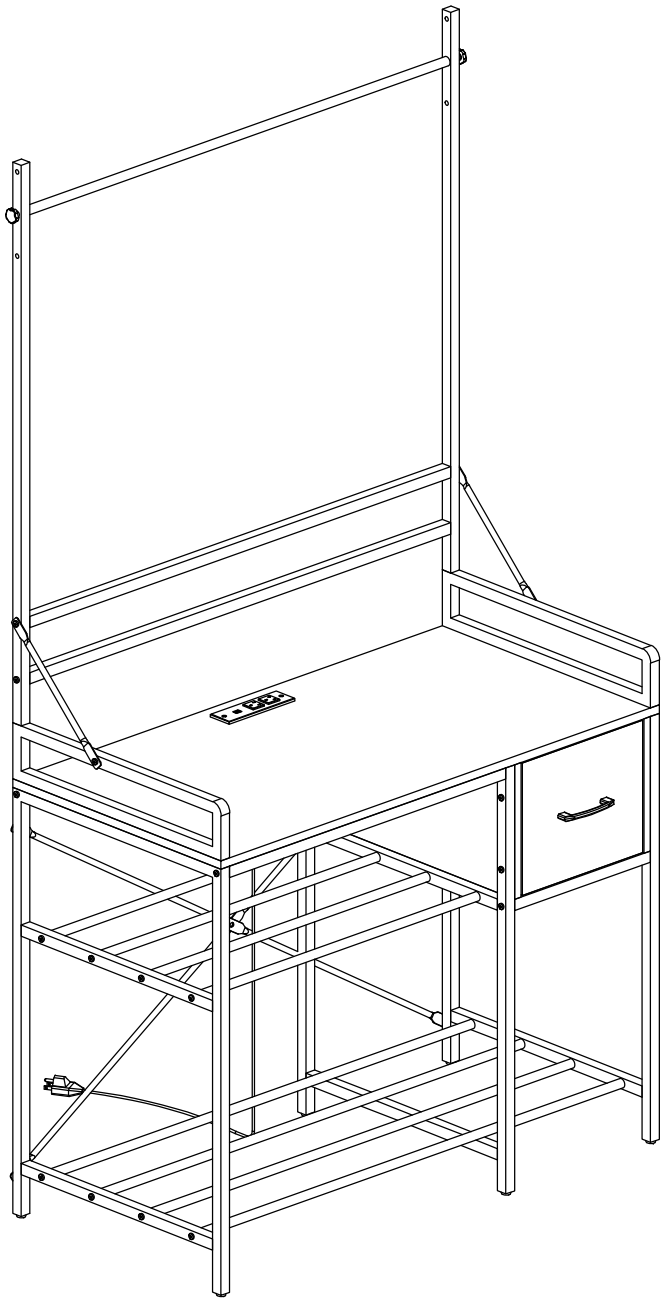

Installation Video OR

DJ0288-170CM
https://vimeo.com/1153481114

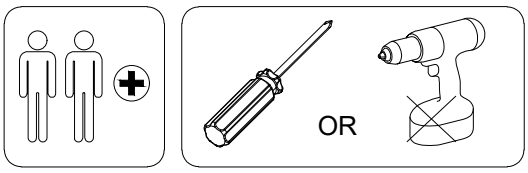

version:1.0

After-Sales Service Card

Dear Customer,

Thank you for choosing our products! We are committed to providing high-quality furniture and exceptional service.

If you encounter any issues, including but not limited to:
✓ Shipping damage
✓ Quality issues
✓ Installation difficulties
✓ Missing accessories

Please feel free to contact us, and we will resolve your issue as soon as possible!

Contact Us:
Email: HOLCEPZN@outlook.com

To help us assist you more efficiently, please provide your platform order number (e.g., 123-1234567-1234567)when reaching out.

Your satisfaction is our top priority! Thank you for your support!

— **The Customer Service Team**

ASSEMBLYINSTRUCTIONS

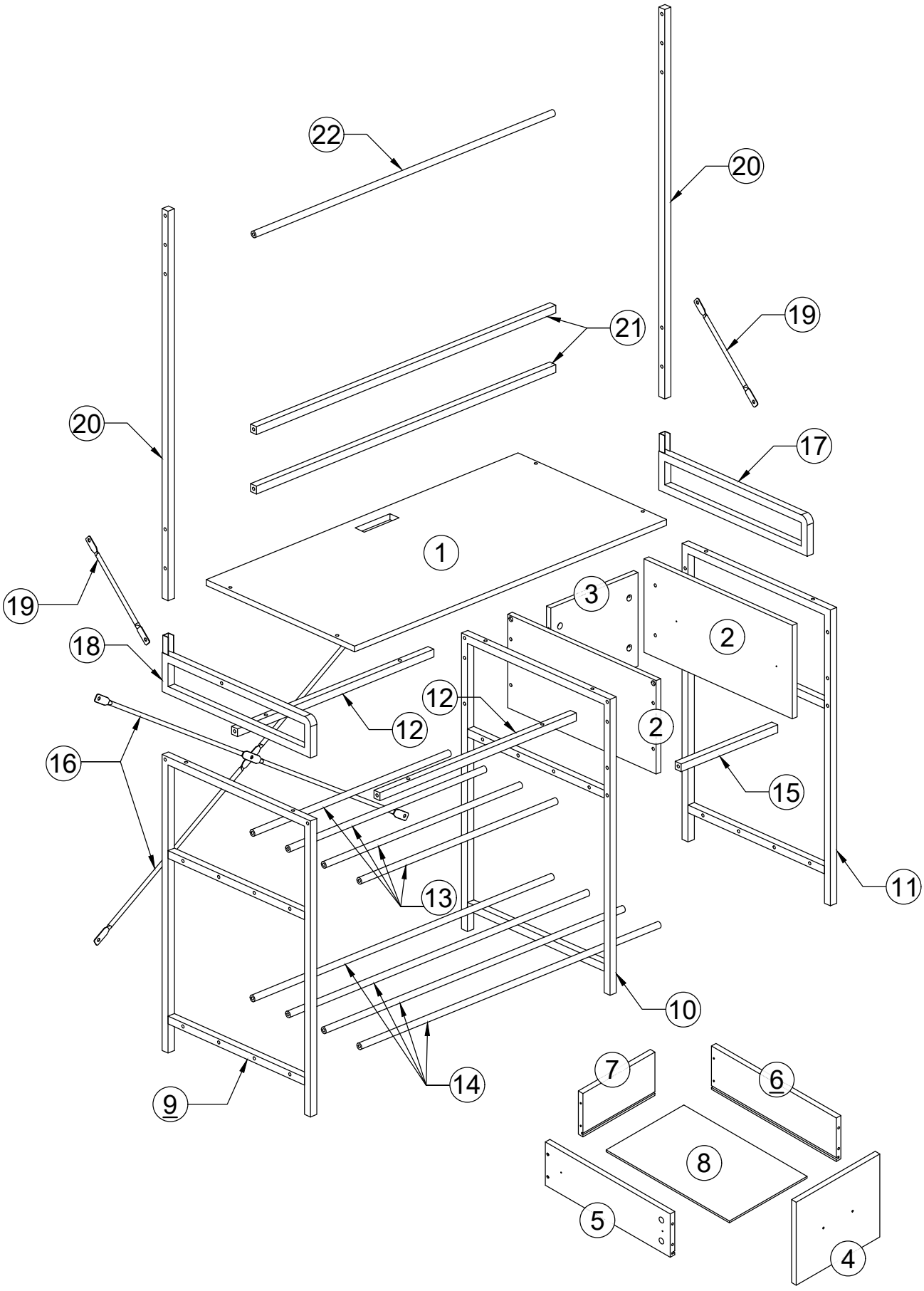

ASSEMBLYINSTRUCTIONS

A x8 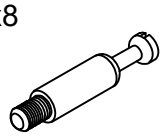 Ø6x35mm	B x8 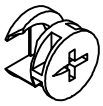 Ø15x10mm	C x11 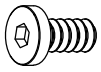 M6x15mm	D x14 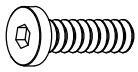 M6x28mm	E x24  M6x35mm
spare: 1	spare: 1	spare: 1	spare: 1	spare: 2

F x6 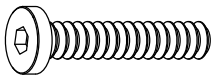 M6x45mm	Gx1 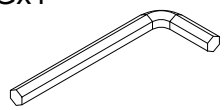 4mm	I x10  Ø6x3x12mm	J x2 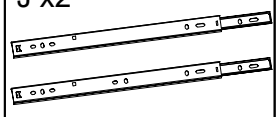 L=340mm	K x1 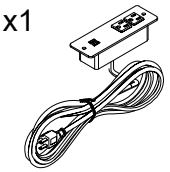
spare: 1		spare: 1		

L x1  M6mm	M x1 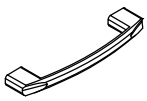	N x2  M4x16mm	O x6 	P x4  Ø5x38mm

Q x2 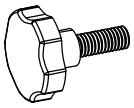	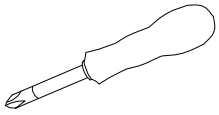			

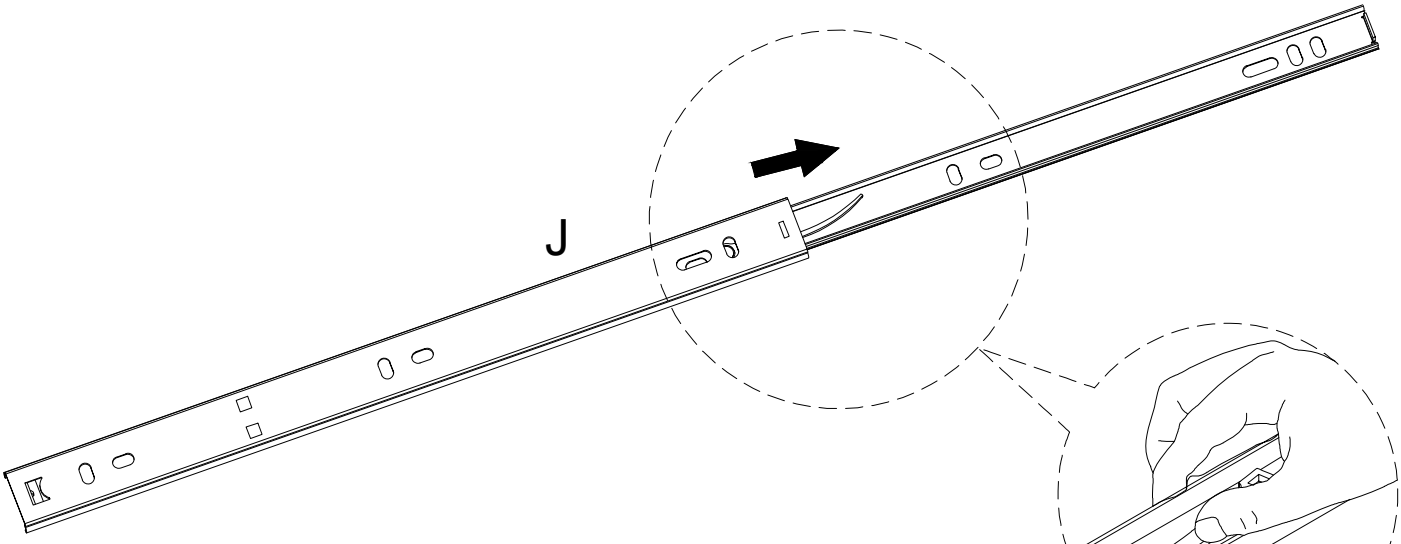

J1 x2 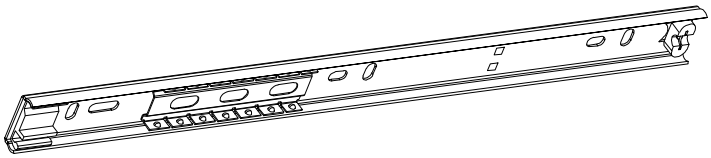

J2 x2 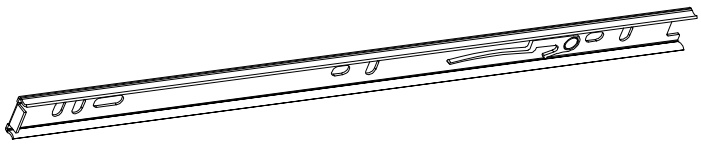

ASSEMBLYINSTRUCTIONS

1 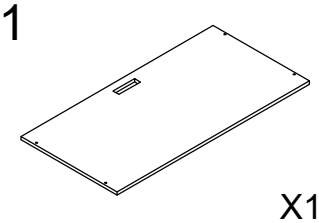 X1	2 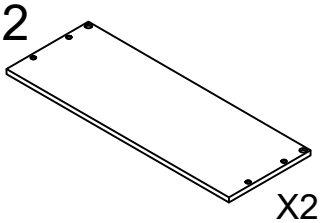 X2	3 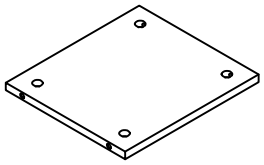 X1	4 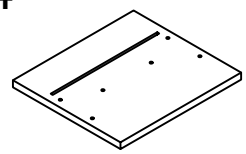 X1
5 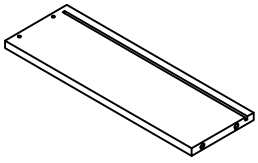 X1	6 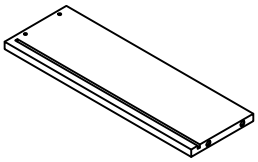 X1	7 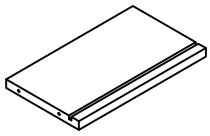 X1	8 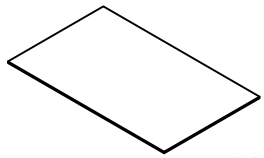 X1
9 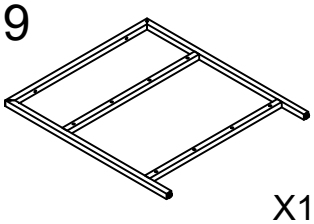 X1	10 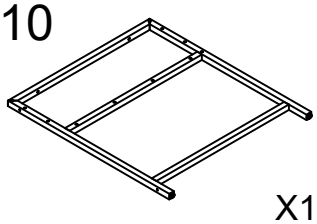 X1	11 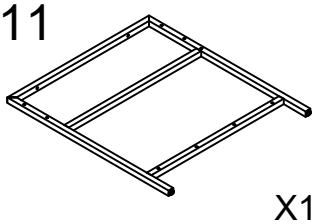 X1	12 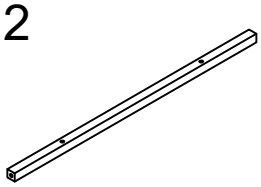 X2
13 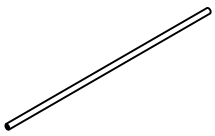 X4	14 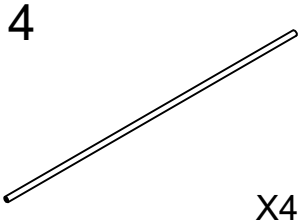 X4	15 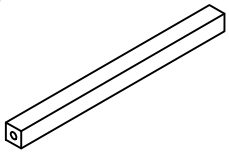 X1	16 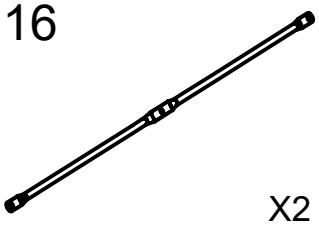 X2
17 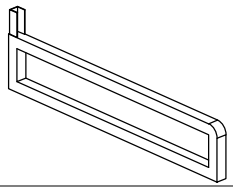 X1	18 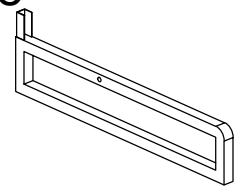 X1	19 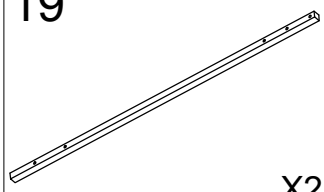 X2	20  X2
21 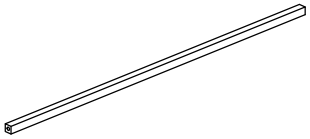 X2	22 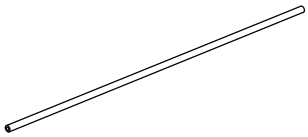 X1		

INSTALLATION

STEP 1

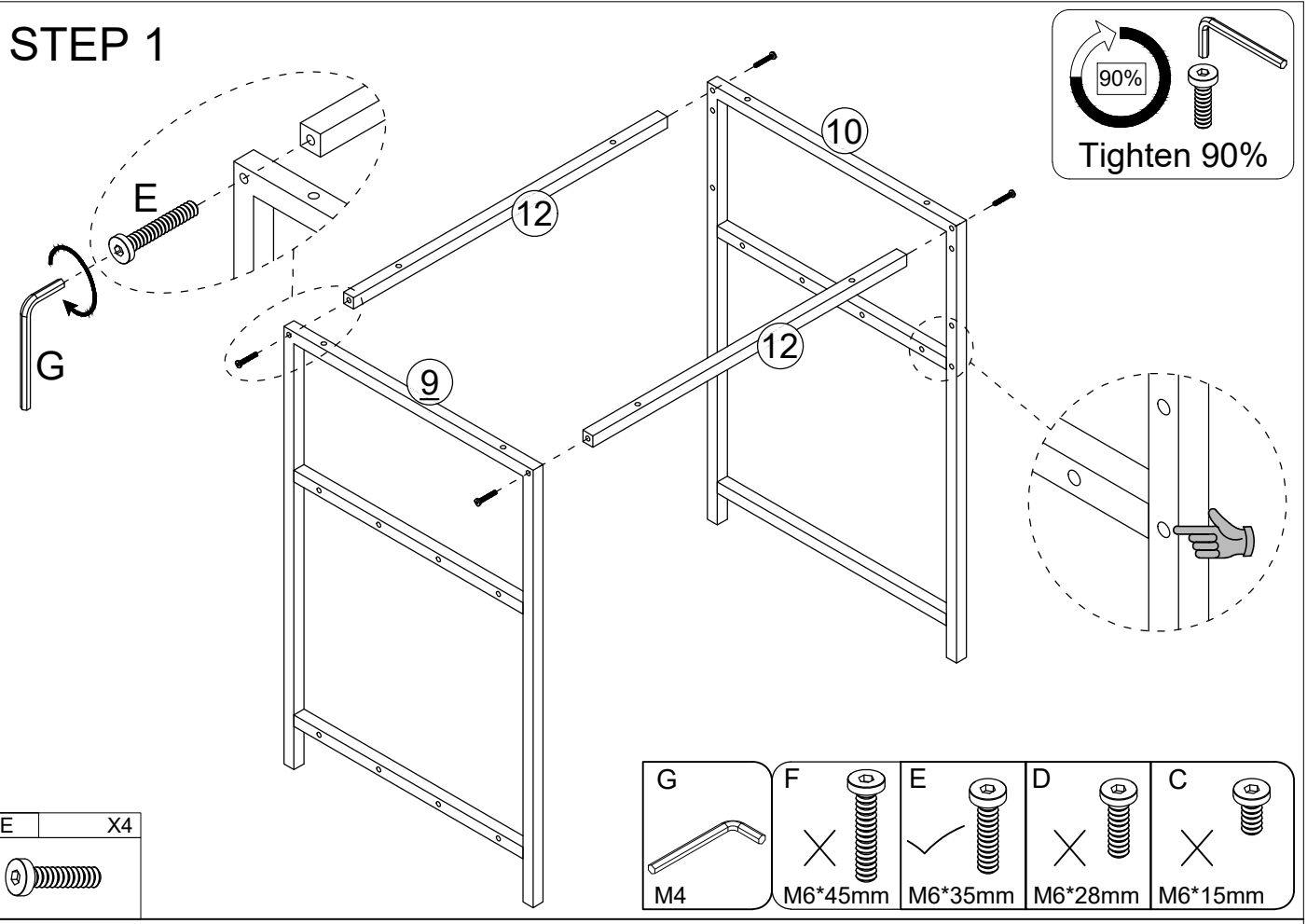

E	X4

G	F	E	D	C
M4	M6*45mm	M6*35mm	M6*28mm	M6*15mm

STEP 2

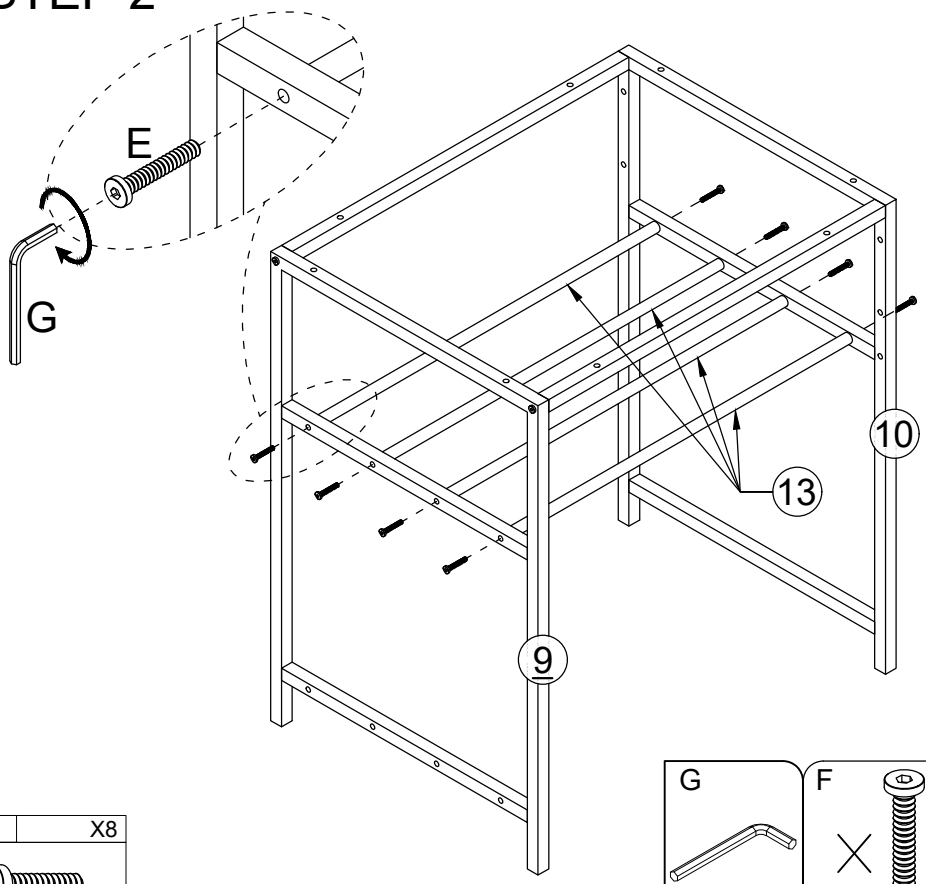

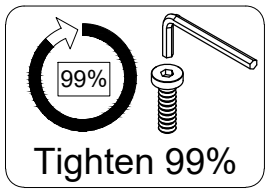

During the installation process, it is necessary to check and tighten the screws at the front part, and then turn them to 99% of the maximum tightening force.

E	X8



G	F	E	D	C
M4	M6*45mm	M6*35mm	M6*28mm	M6*15mm

INSTALLATION

STEP 3

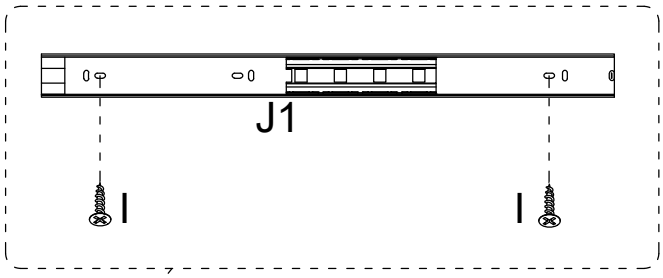

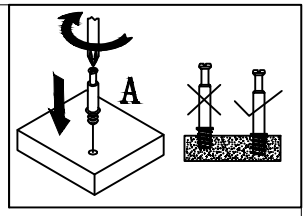

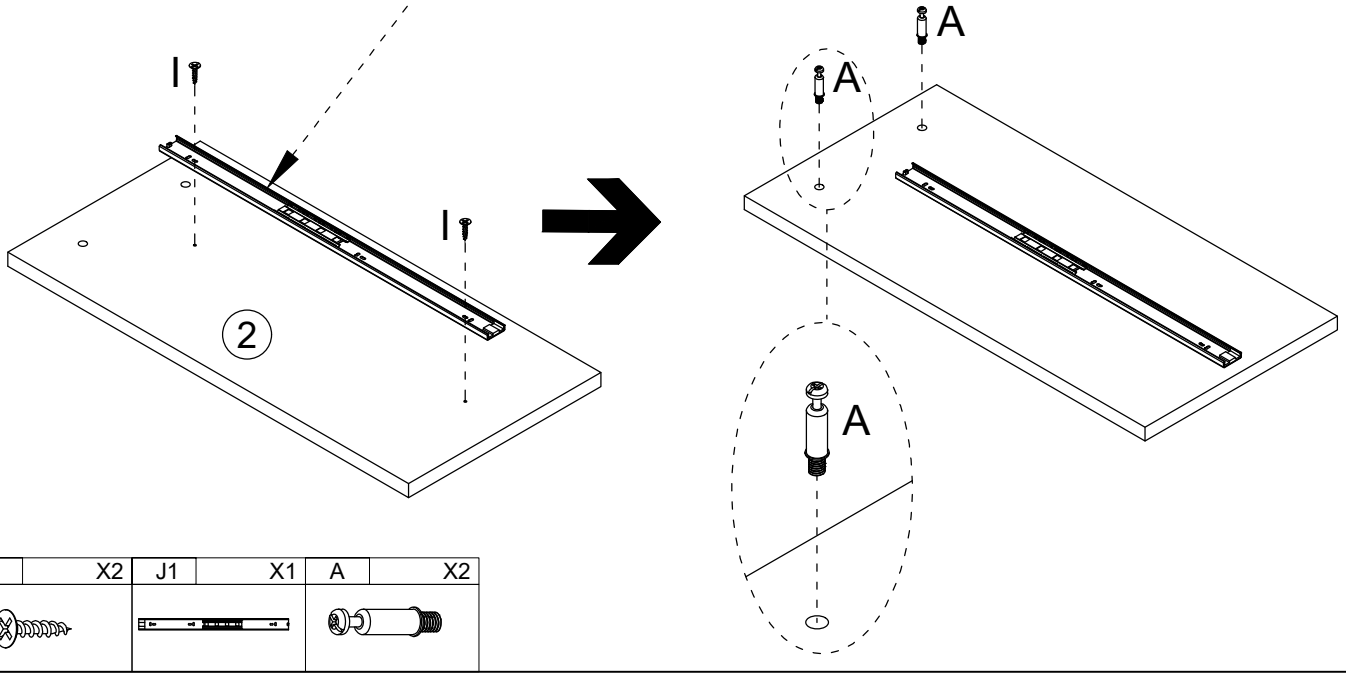

I	X2	J1	X1	A	X2

STEP 4

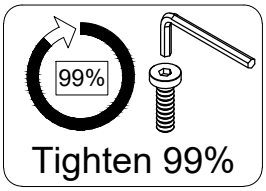

D	X4

G	F	E	D	C
M4	M6*45mm	M6*35mm	M6*28mm	M6*15mm

INSTALLATION

STEP 5

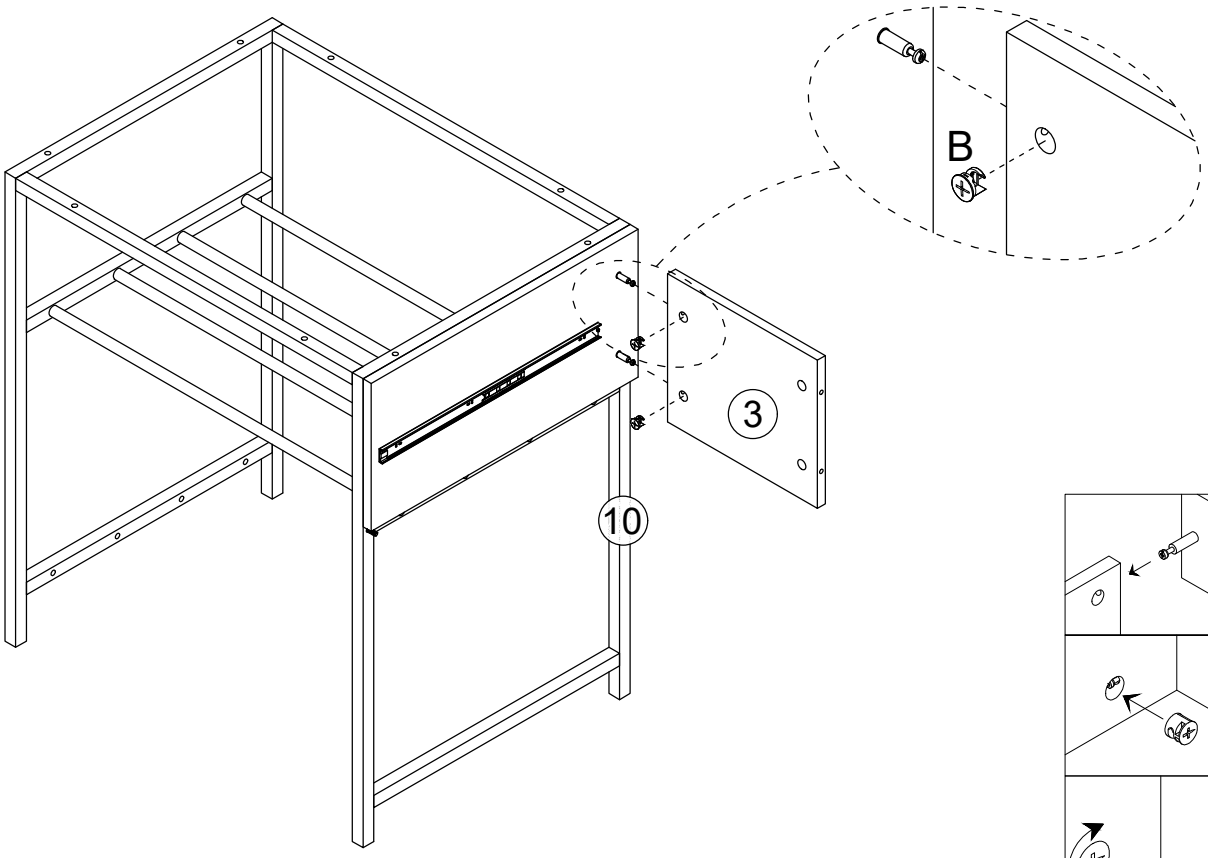

B	X2



STEP 6

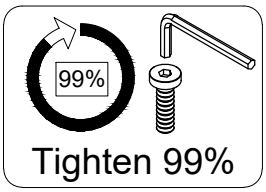

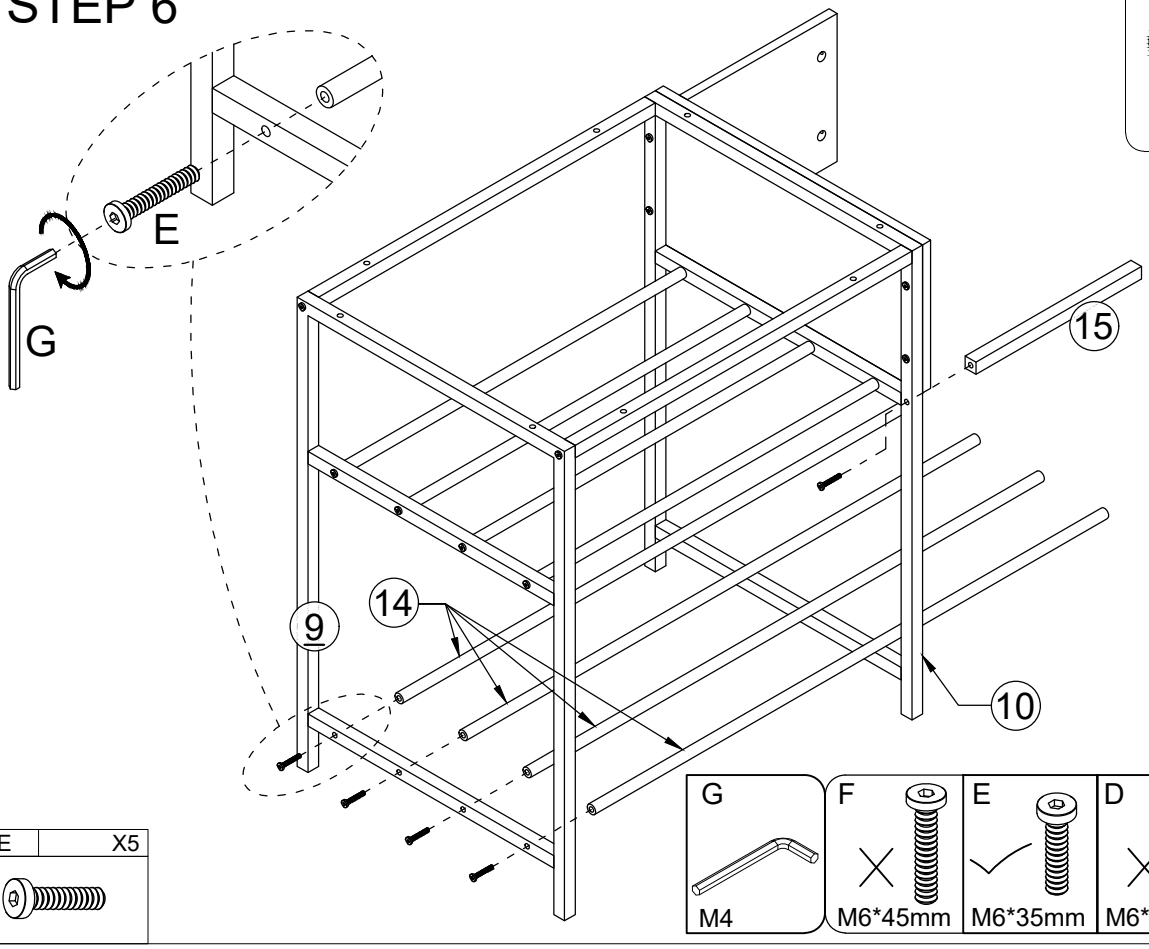

E	X5

G	F	E	D	C
M4	M6*45mm	M6*35mm	M6*28mm	M6*15mm

INSTALLATION

STEP 7

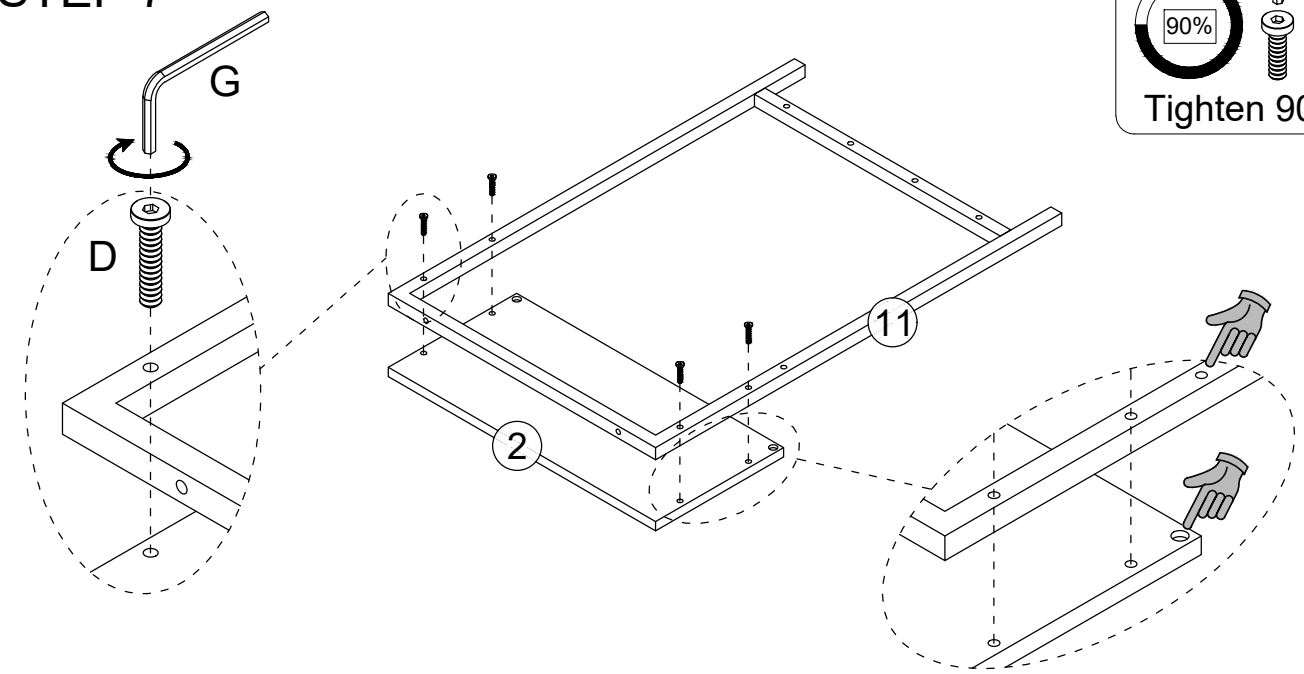

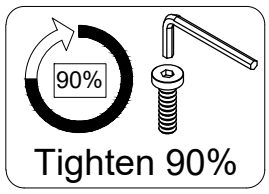

D	X4



G	F	E	D	C
M4	M6*45mm	M6*35mm	M6*28mm	M6*15mm

STEP 8

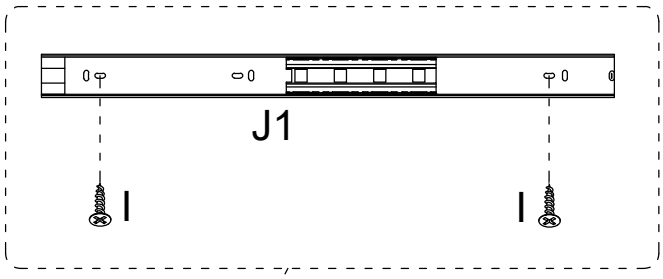

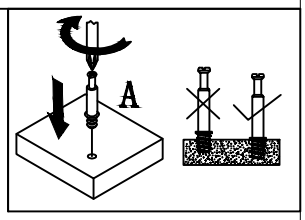

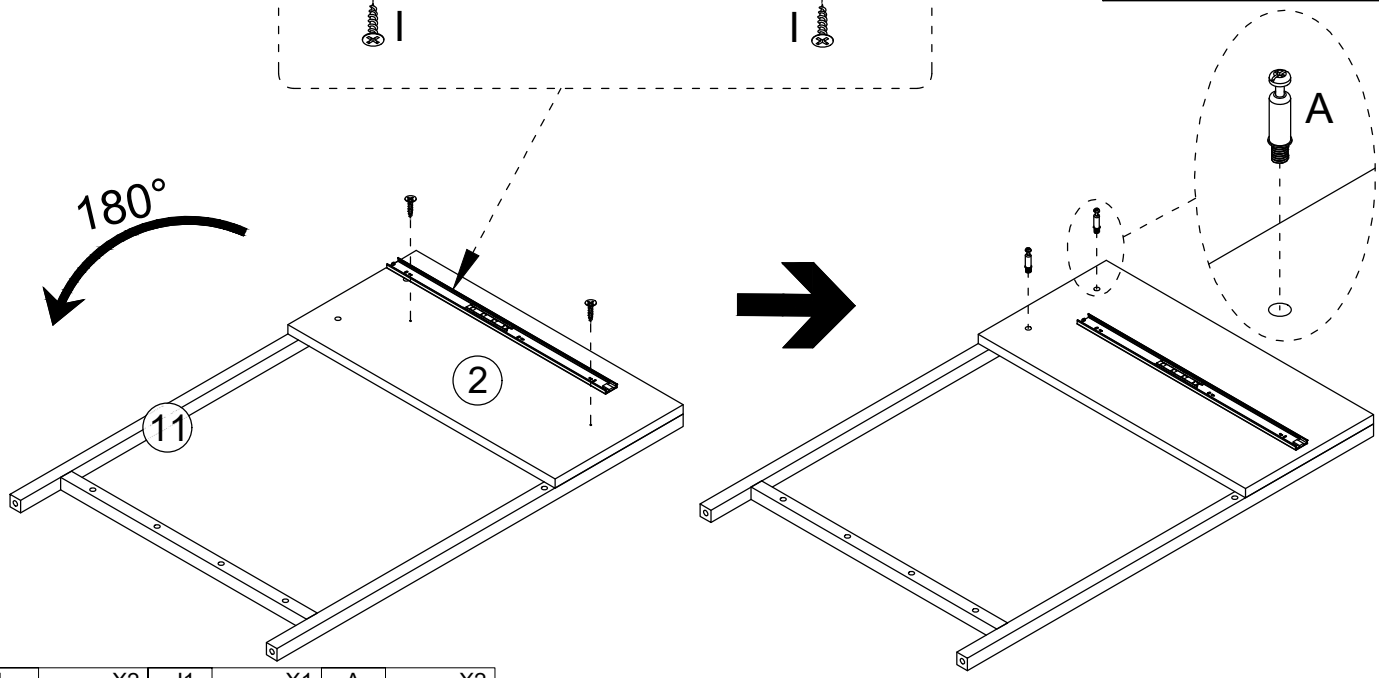

I	X2	J1	X1	A	X2

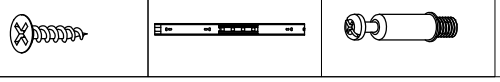

STEP 9

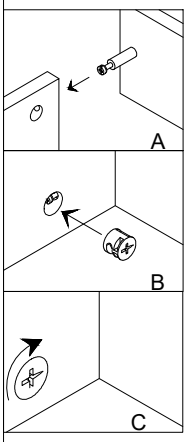

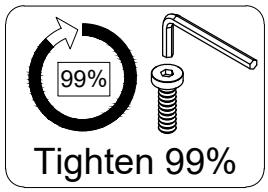

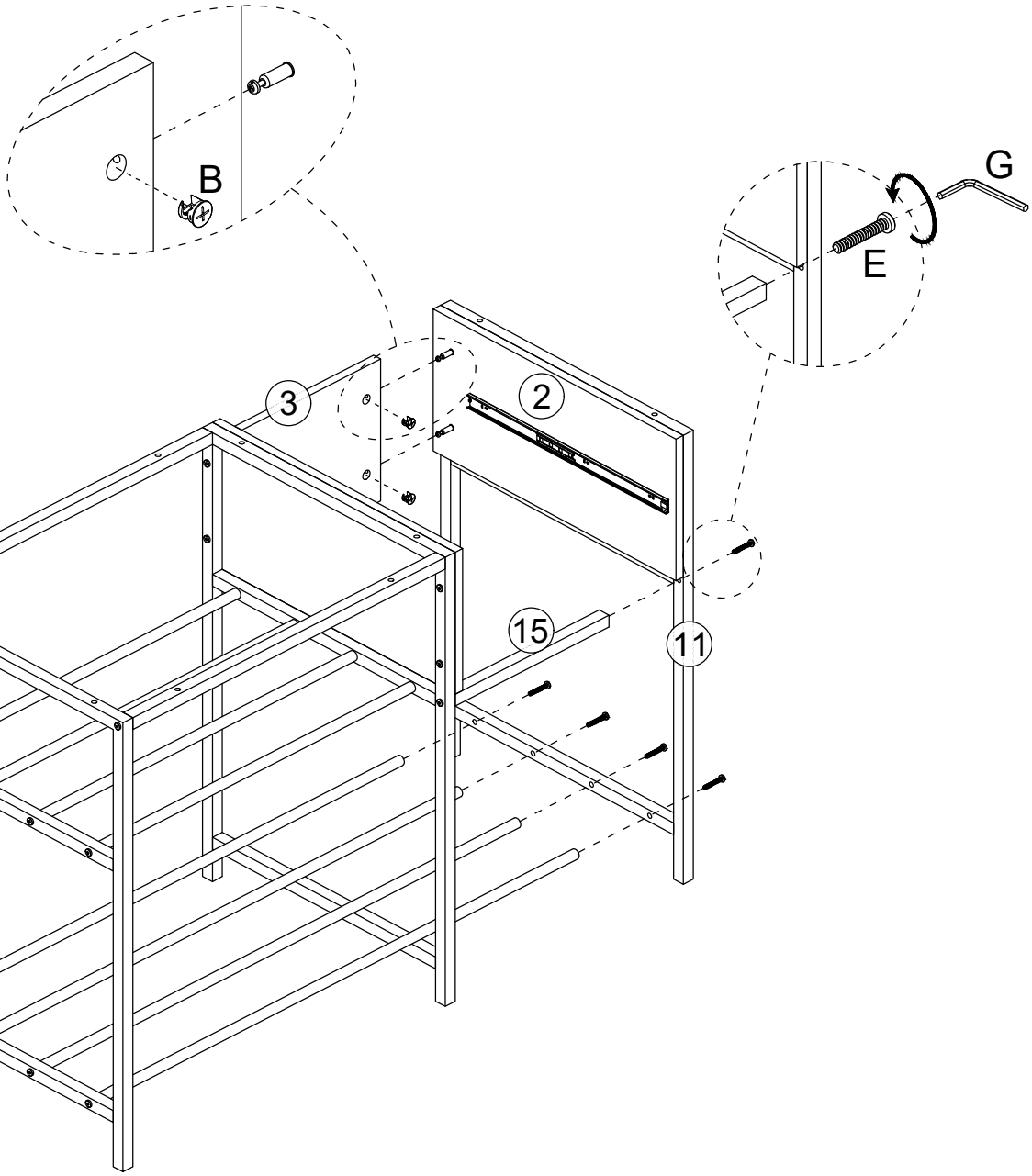

B	X2
E	X5

G	F	E	D	C
M4	M6*45mm	M6*35mm	M6*28mm	M6*15mm

STEP 10

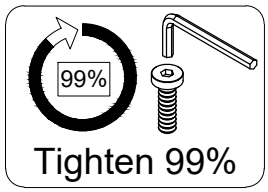
99%
Tighten 99%

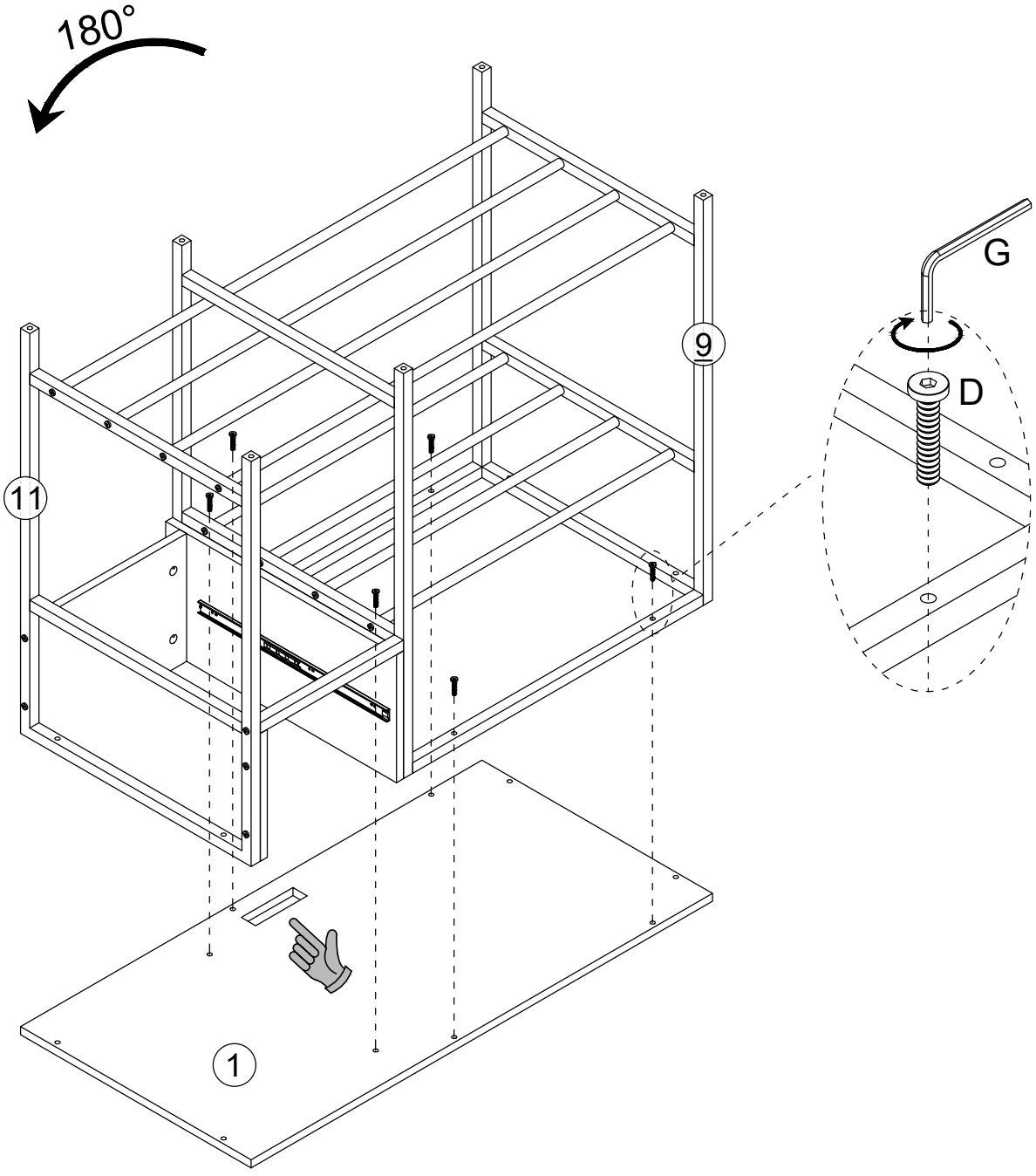
180°
9
11
1
G
D

D	X6

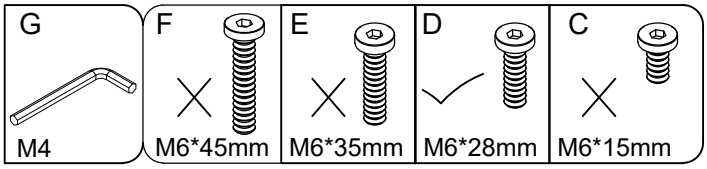
G
M4
F
M6*45mm
E
M6*35mm
D
M6*28mm
C
M6*15mm

STEP 11

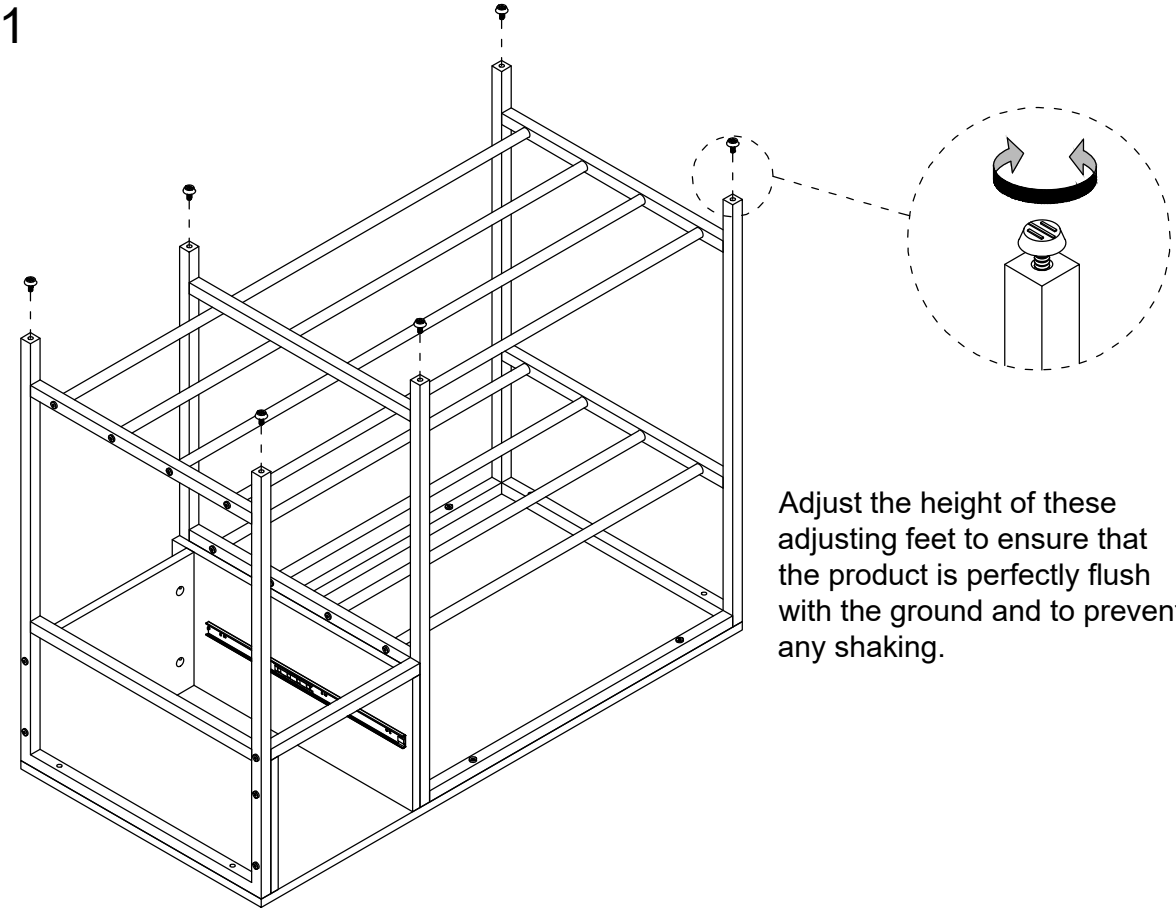

Adjust the height of these adjusting feet to ensure that the product is perfectly flush with the ground and to prevent any shaking.

O	X6



STEP 12

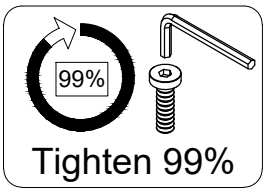

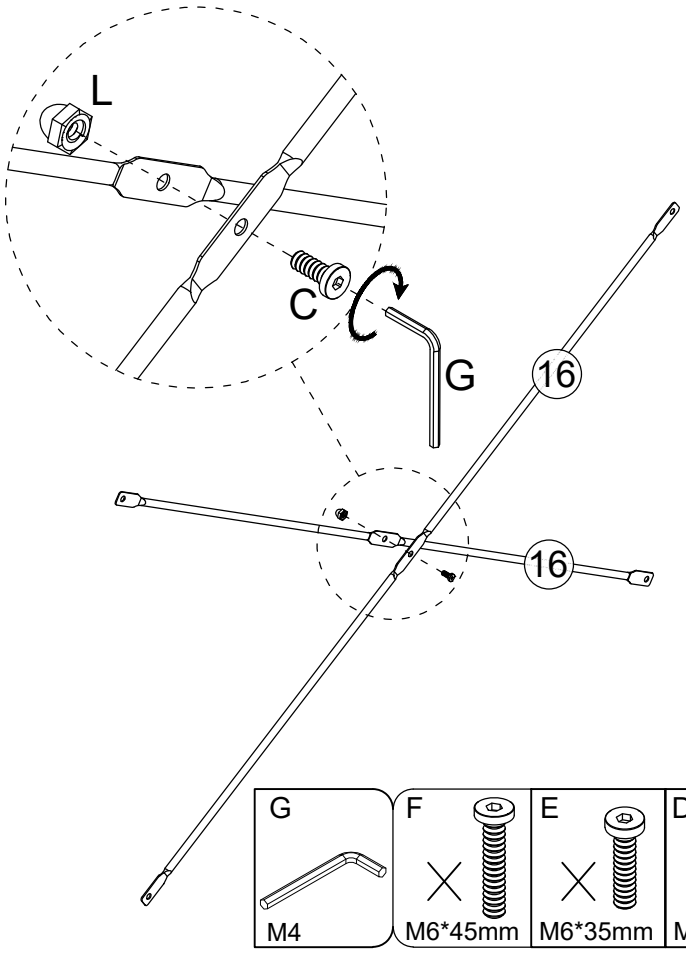

C	X1	L	X1





G	F	E	D	C
M4	M6*45mm	M6*35mm	M6*28mm	M6*15mm

INSTALLATION

STEP 13

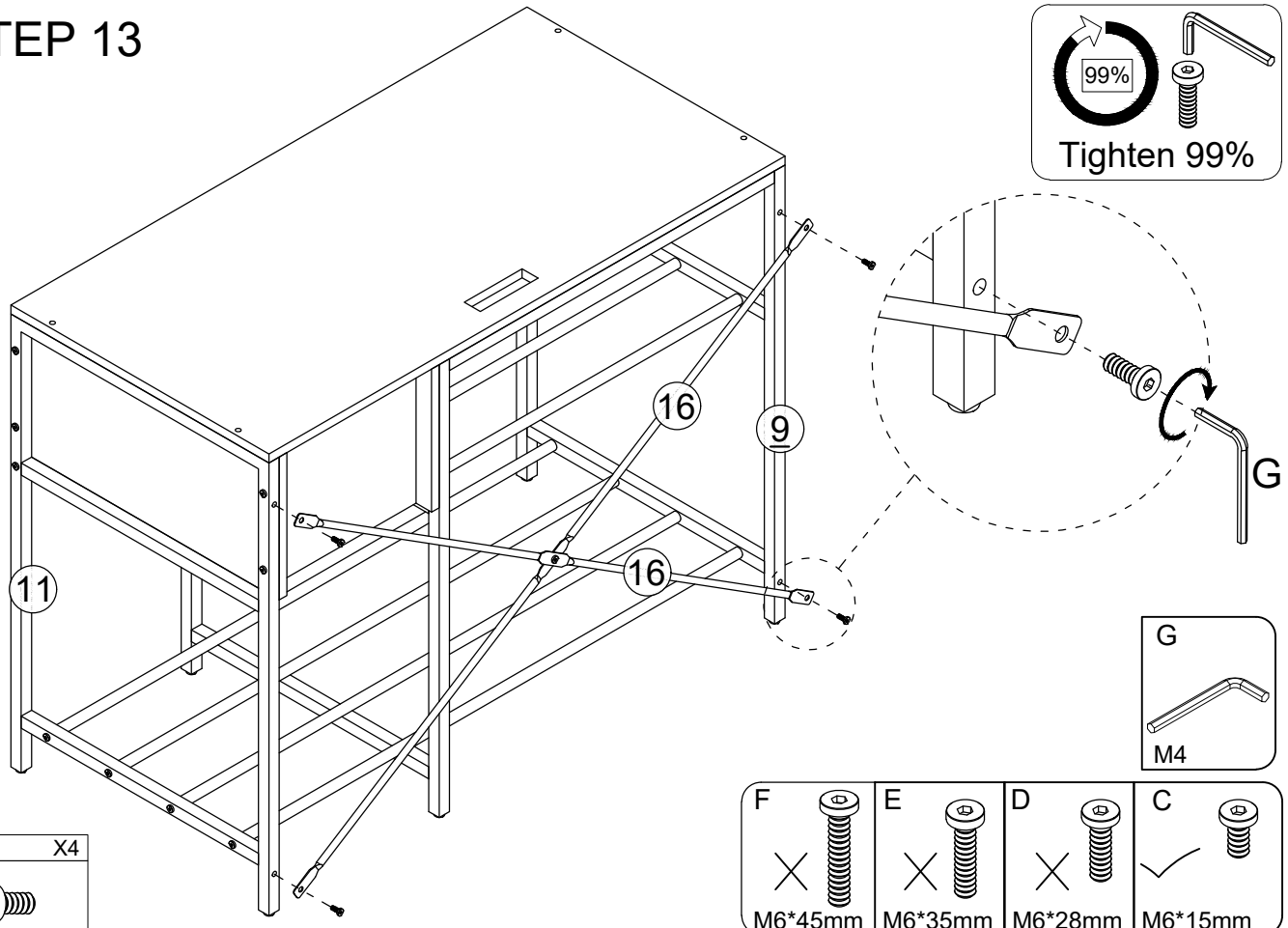

C	X4



STEP 14

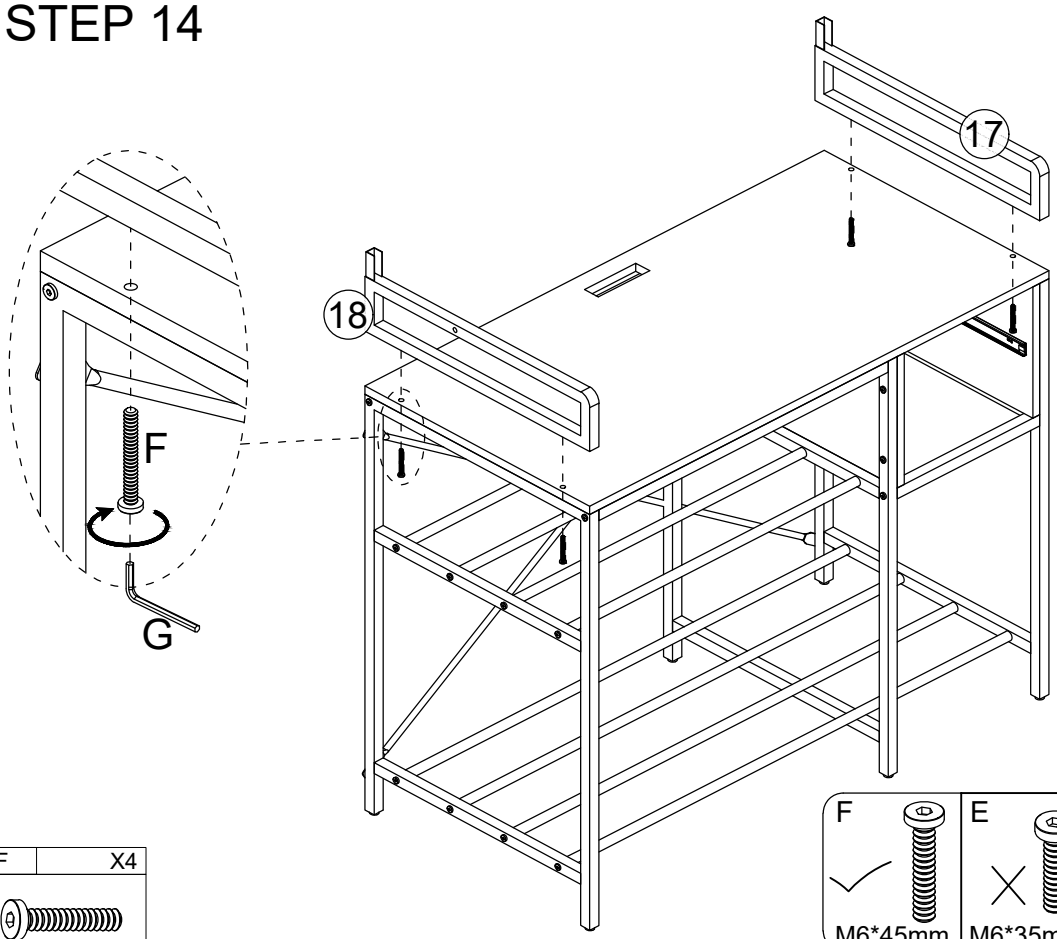

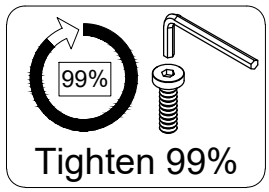

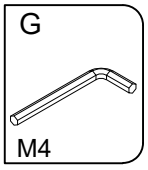

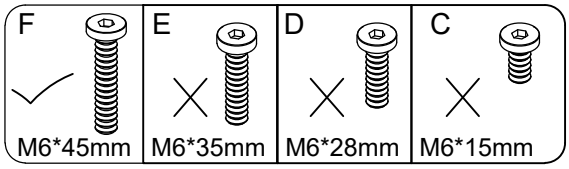

F	X4

STEP 15

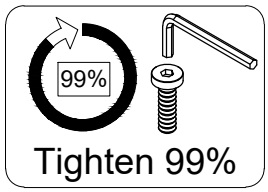

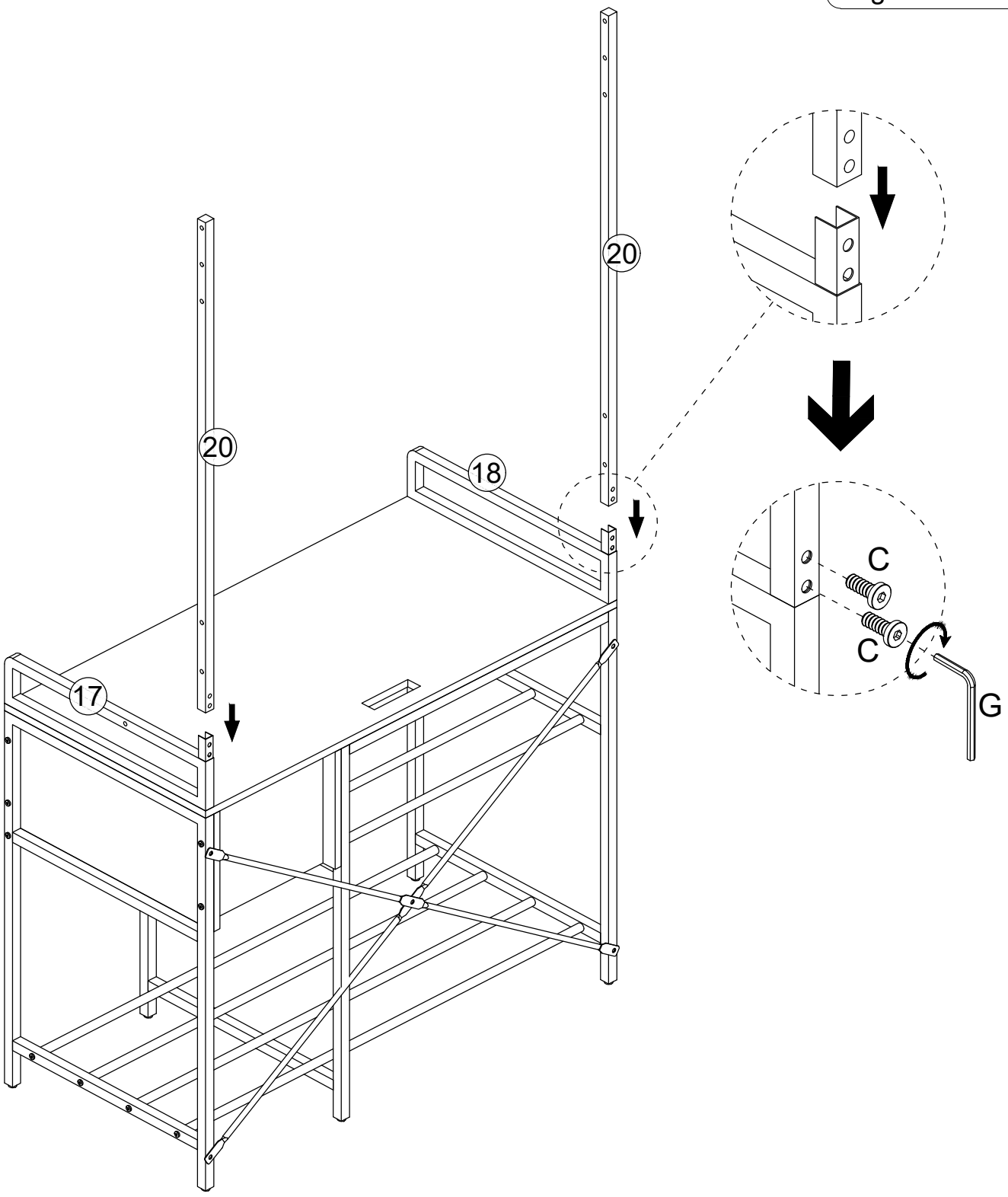

C	X4



G	F	E	D	C
M4	M6*45mm	M6*35mm	M6*28mm	M6*15mm

INSTALLATION

STEP 16

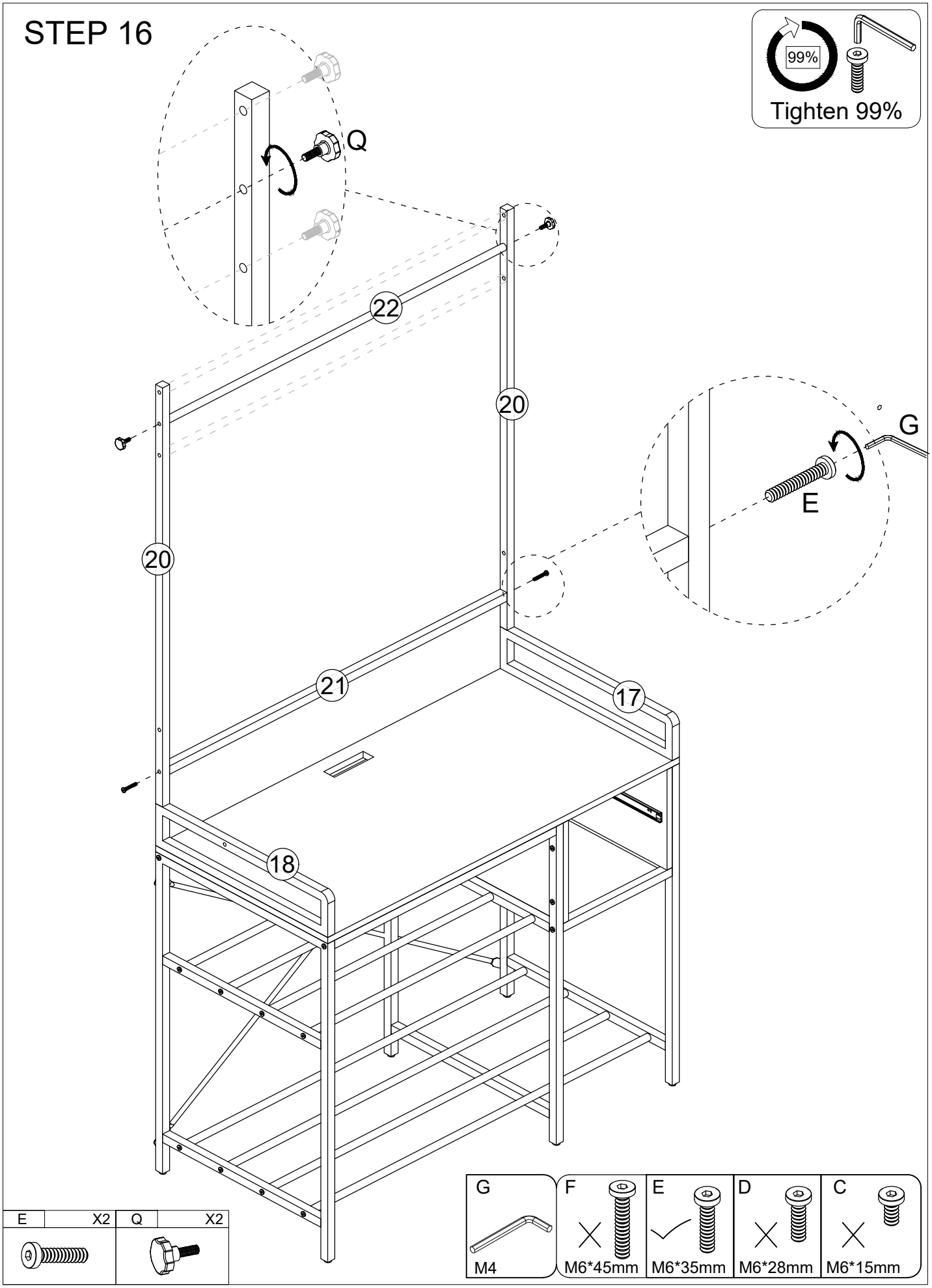

E	X2	Q	X2

G	F	E	D	C
M4	M6*45mm	M6*35mm	M6*28mm	M6*15mm

STEP 17

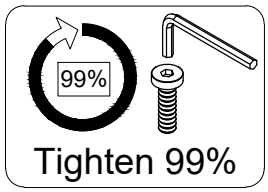

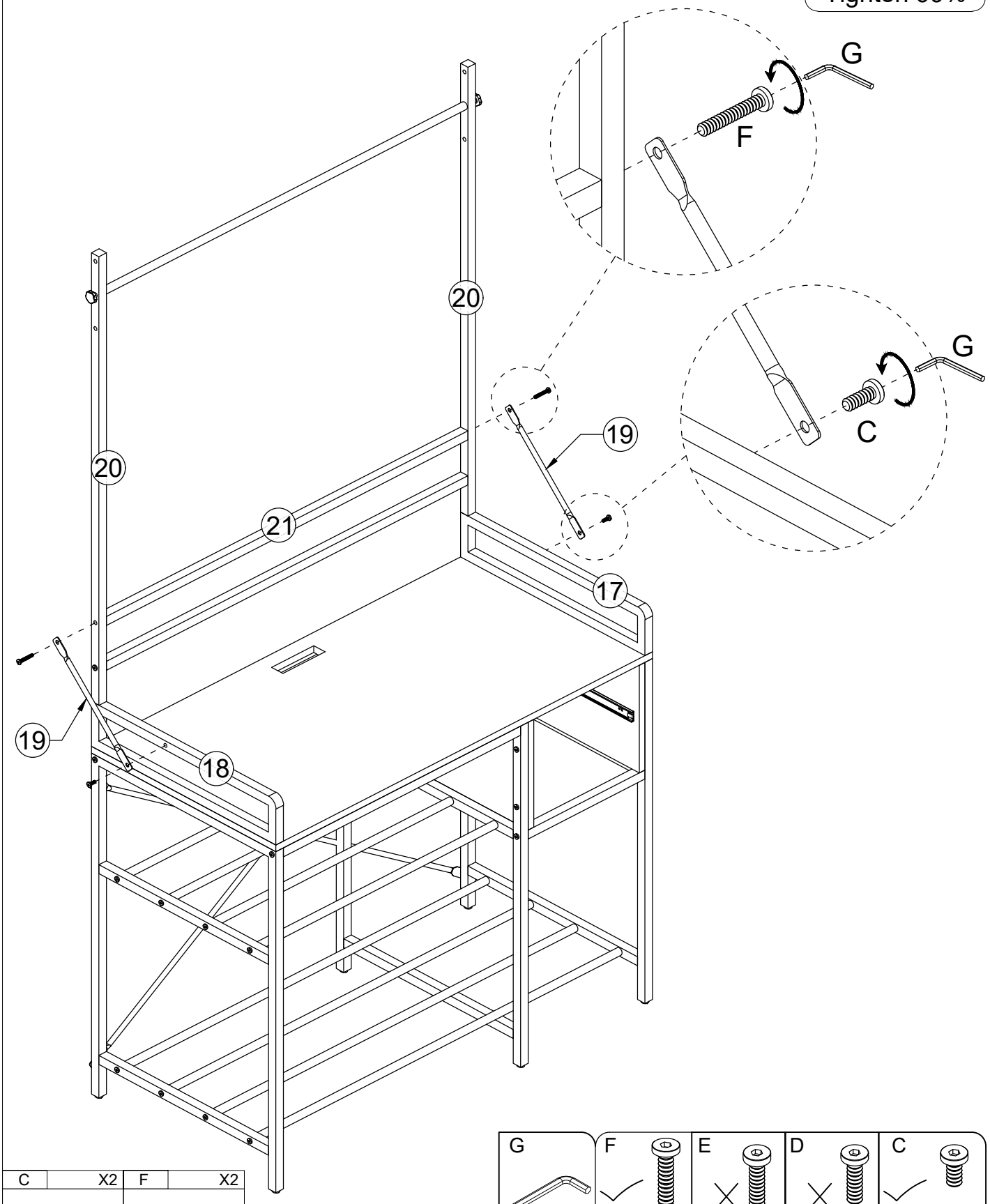

C	X2	F	X2

G	F	E	D	C
M4	M6*45mm	M6*35mm	M6*28mm	M6*15mm

STEP 18

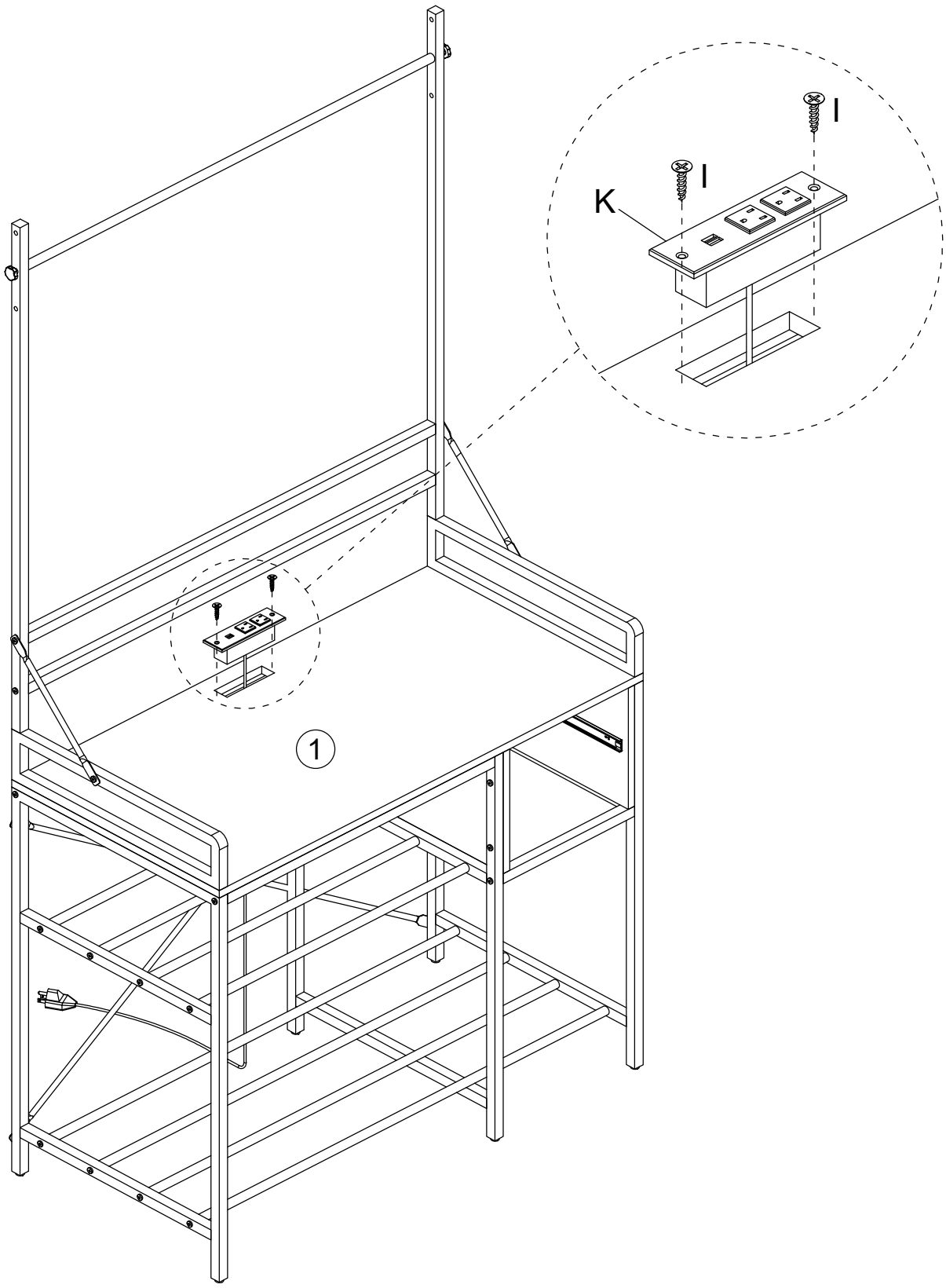

I	X2	K	X1
			

STEP 19

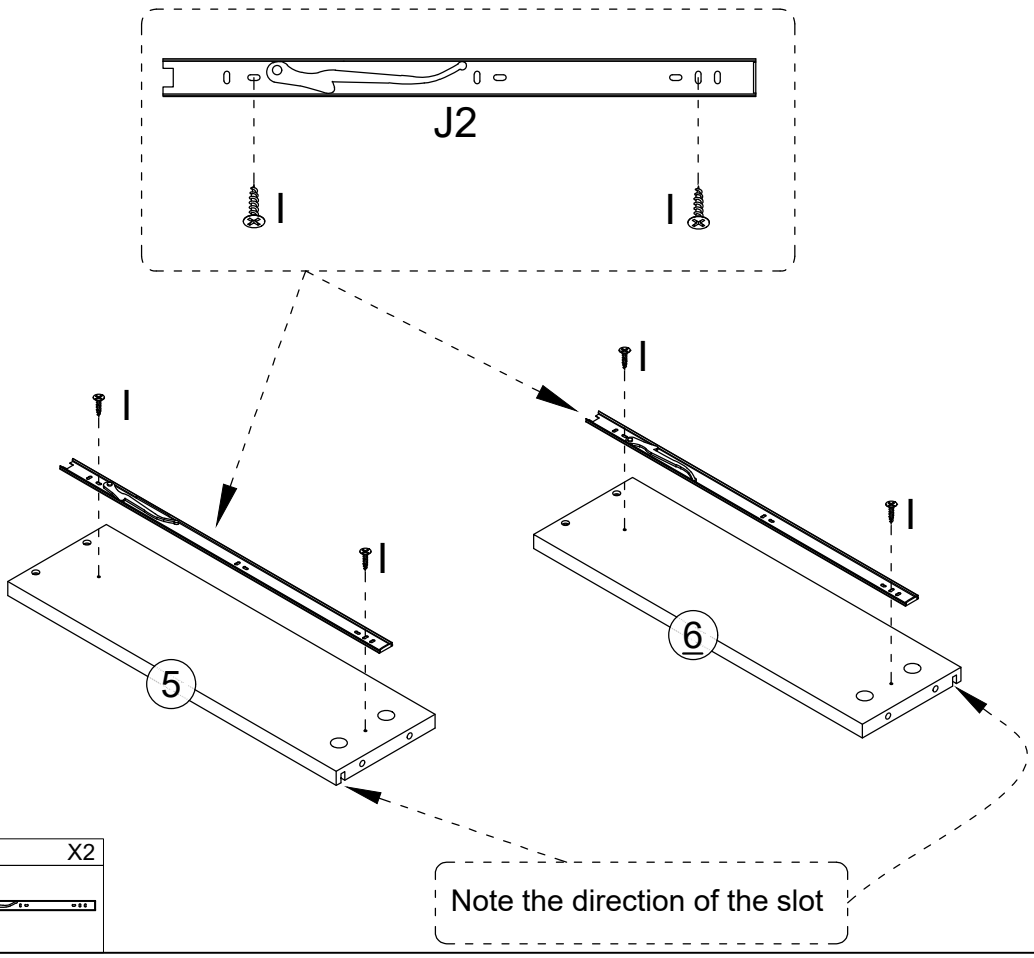

IA	X4	J2	X2

STEP 20

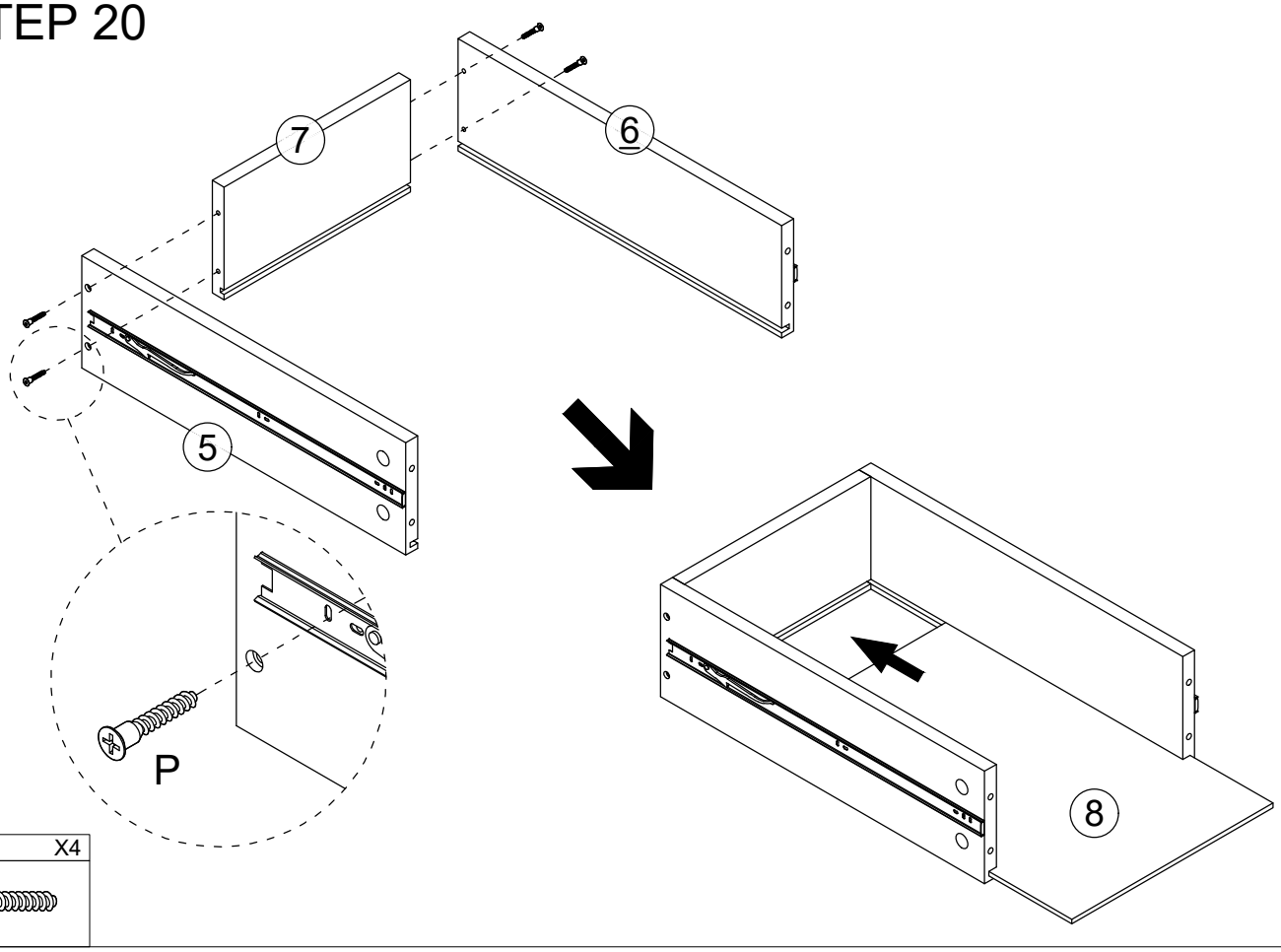

P	X4

STEP 21

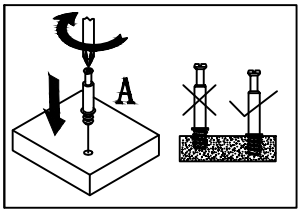

	X4	B	X4
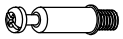			

STEP 22

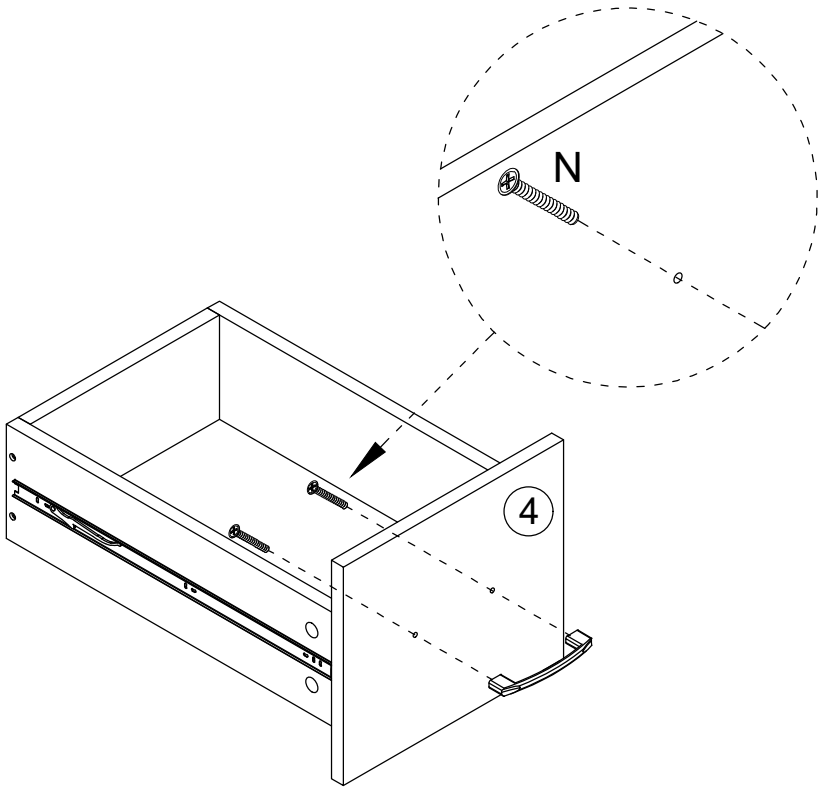

M	X1	N	X2
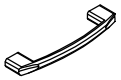			

STEP 23

