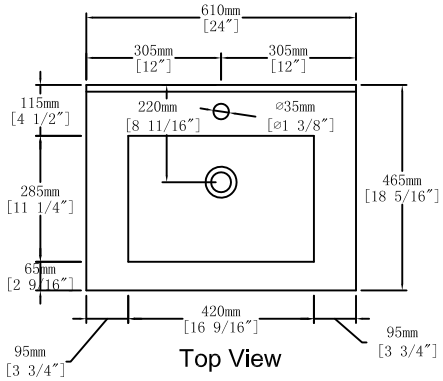

Top View

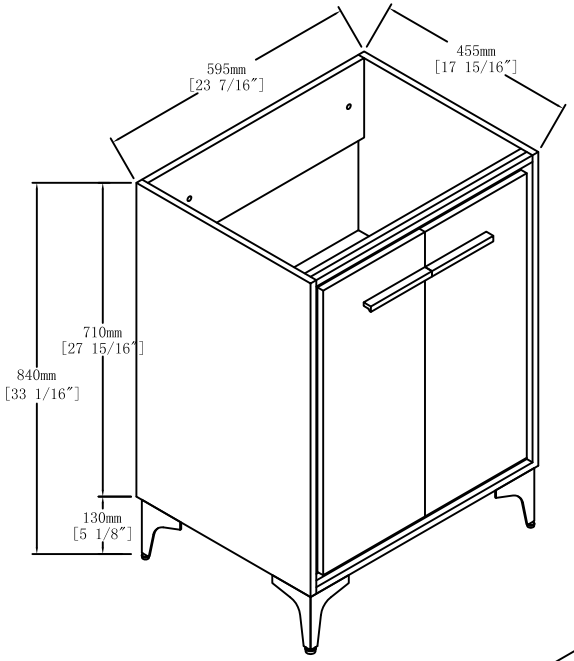

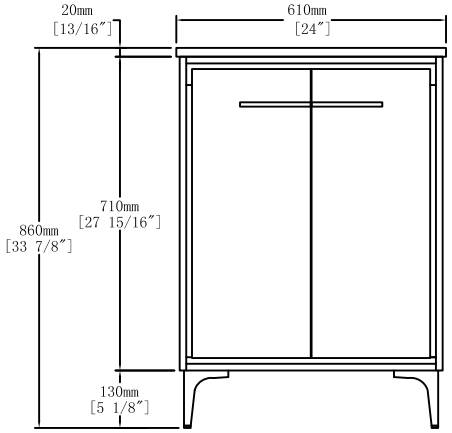

Front View

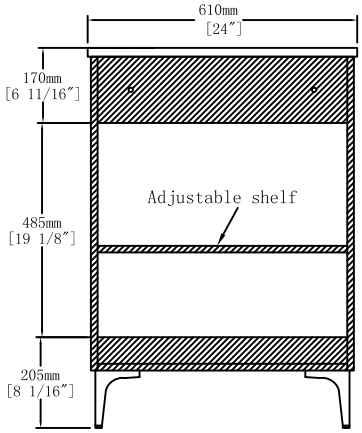

Back View

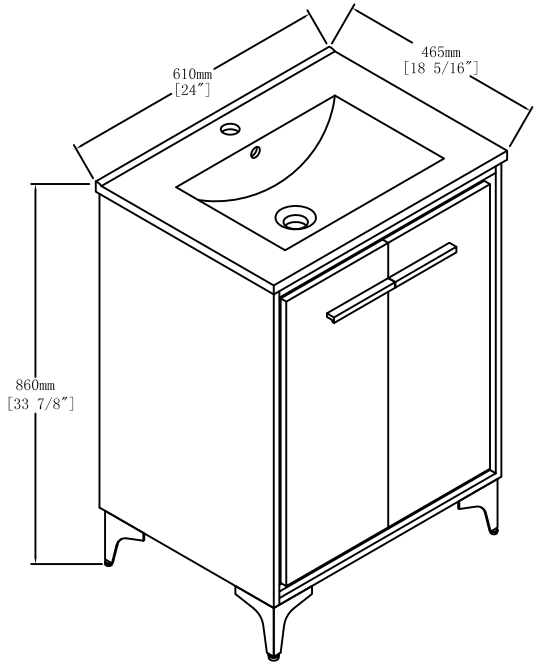

Item NO.	LV C224	Version	V1