ASSEMBLY INSTRUCTIONS

Fine Furniture for every stage of life

END TABLE

REVISION 0 : 08/19/2026

ASSEMBLY INSTRUCTIONS

ASSEMBLY TIPS:

1. Remove hardware from box and sort by size.
2. Please check to see that all hardware and parts are present prior to start of assembly.
3. Please follow attached instructions in the same sequence as numbered to assure fast & easy assembly.

WARNING!

1. Don't attempt to repair or modify parts that are broken or defective. Please contact the store immediately.
2. This product is for home use only and not intended for commercial establishments.

ASSEMBLY TIME	25 MINUTES

PARTS IDENTIFICATION

A	TOP	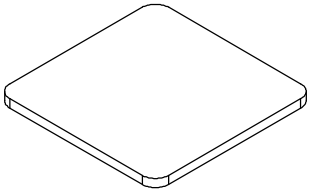	1PC
B	LEG FRAME 1	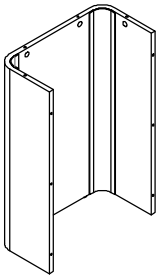	1PC
C	LEG FRAME 2	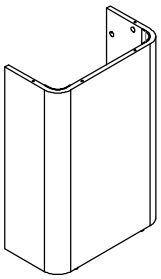	1PC

ASSEMBLY INSTRUCTIONS

Z

HARDWARE IDENTIFICATION

1	CAM-BOLT (38mm)	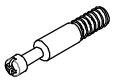	14PCS
2	CAM-LOCK (ϕ15mm)		14PCS
3	ALLEN WRENCH (4mm)		1PC

STEP 1

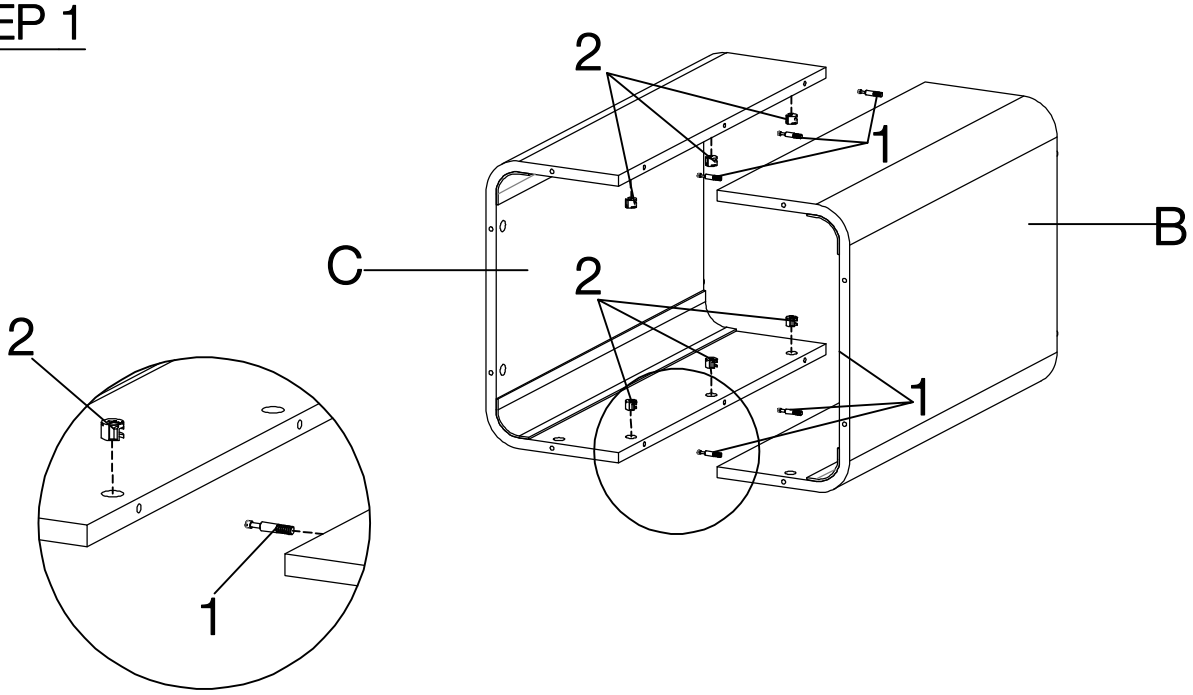

STEP 2

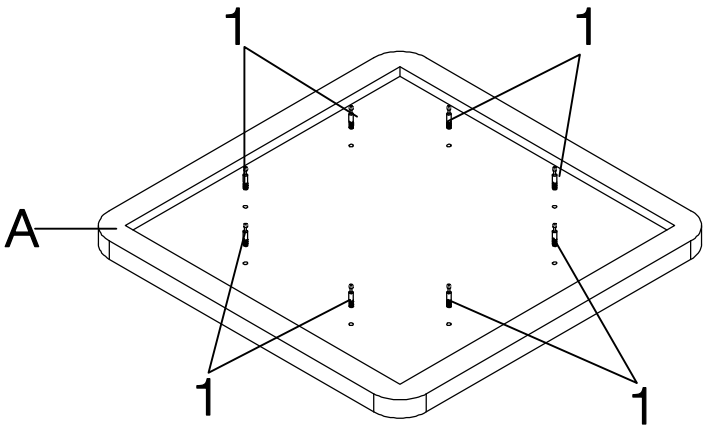

ASSEMBLY INSTRUCTIONS

STEP 3

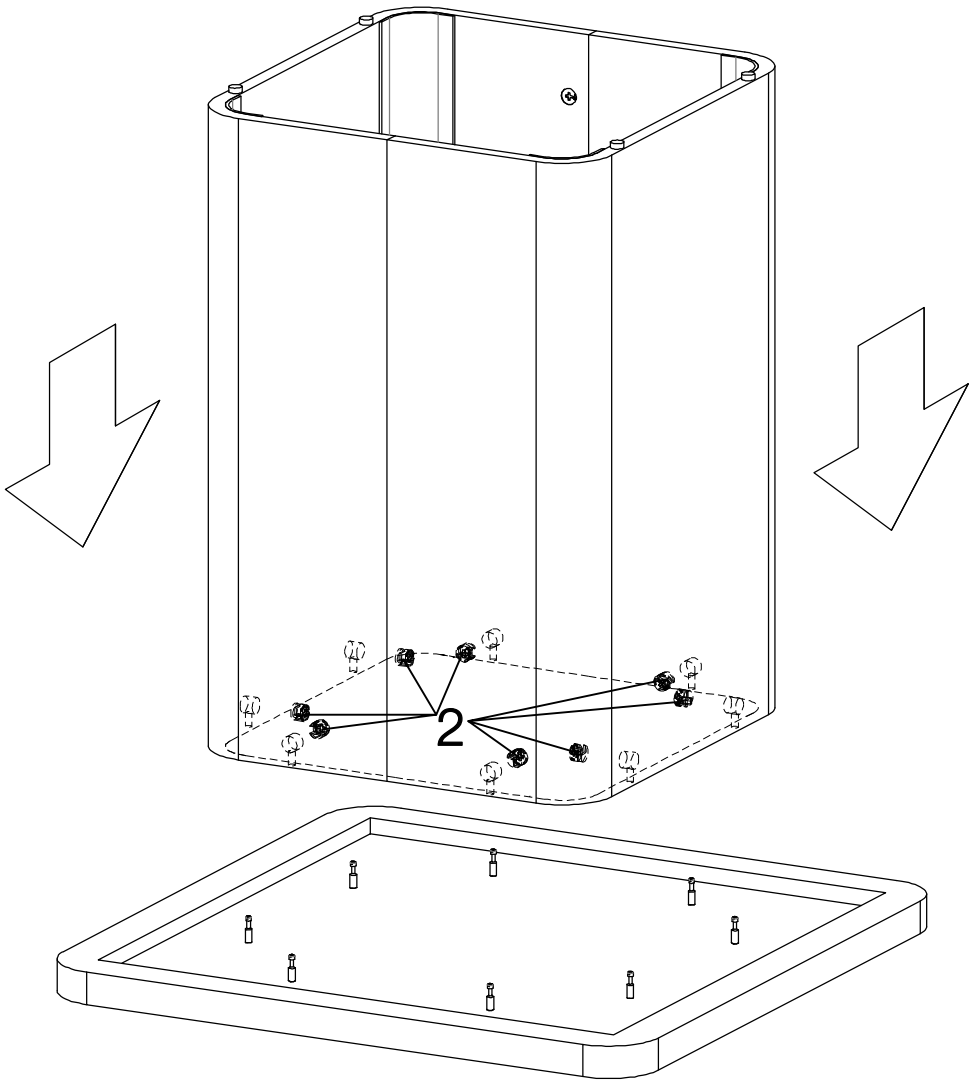

STEP 4

COMPLETE

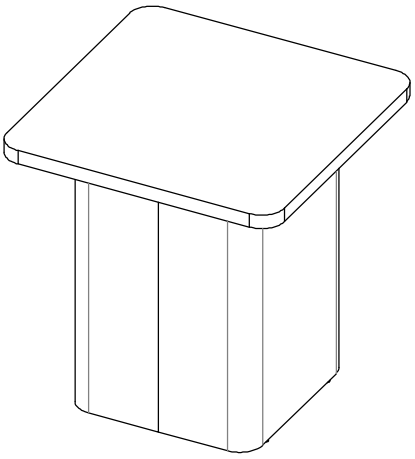

ASSEMBLY INSTRUCTIONS

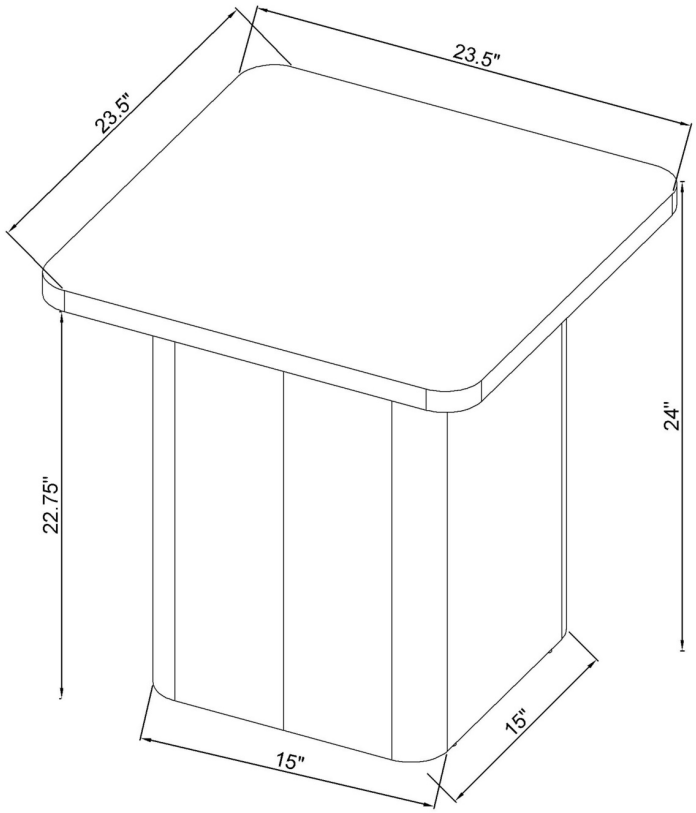

Note : Dimension tolerance ±5%

ASSEMBLY INSTRUCTIONS

Fine Furniture for every stage of life

COFFEE TABLE

REVISION 0 : 08/19/2026

ASSEMBLY INSTRUCTIONS

ASSEMBLY TIPS:

1. Remove hardware from box and sort by size.
2. Please check to see that all hardware and parts are present prior to start of assembly.
3. Please follow attached instructions in the same sequence as numbered to assure fast & easy assembly.

WARNING!

1. Don't attempt to repair or modify parts that are broken or defective. Please contact the store immediately.
2. This product is for home use only and not intended for commercial establishments.

ASSEMBLY TIME | 25 MINUTES

PARTS IDENTIFICATION

A	TOP	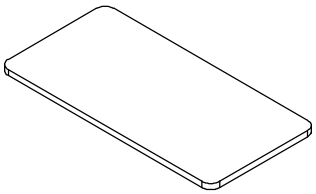	1PC
B	LEG FRAME 1	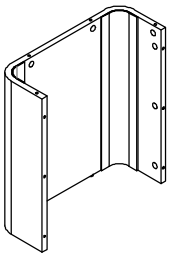	2PCS
C	LEG FRAME 2	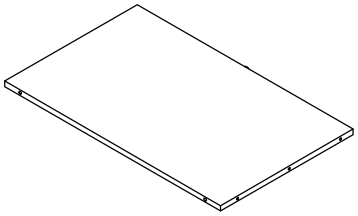	2PCS

ASSEMBLY INSTRUCTIONS

Z

HARDWARE IDENTIFICATION

1	CAM-BOLT (38mm)	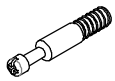	20PCS
2	CAM-LOCK (ϕ15mm)		20PCS
3	WOOD DOWEL (8 x 30mm)		4PCS
4	GLUE		1PC
5	ALLEN WRENCH (4mm)		1PC

STEP 1

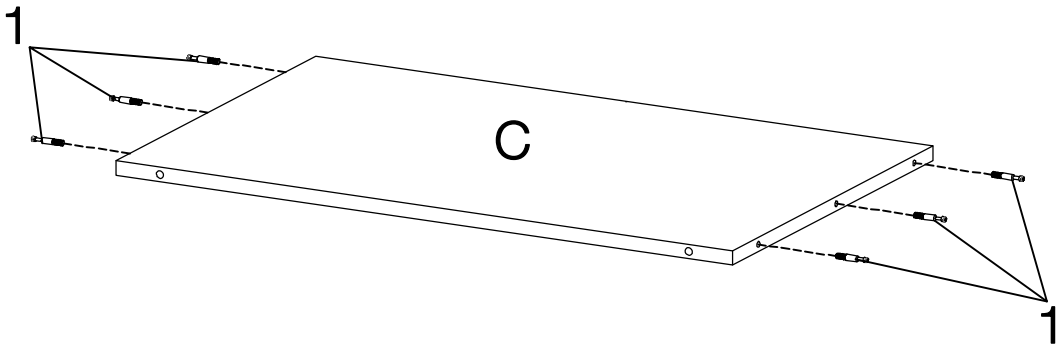

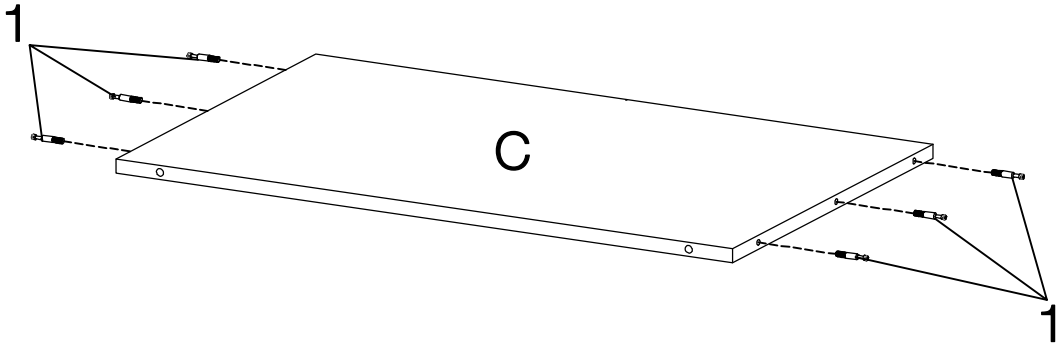

ASSEMBLY INSTRUCTIONS

STEP 2

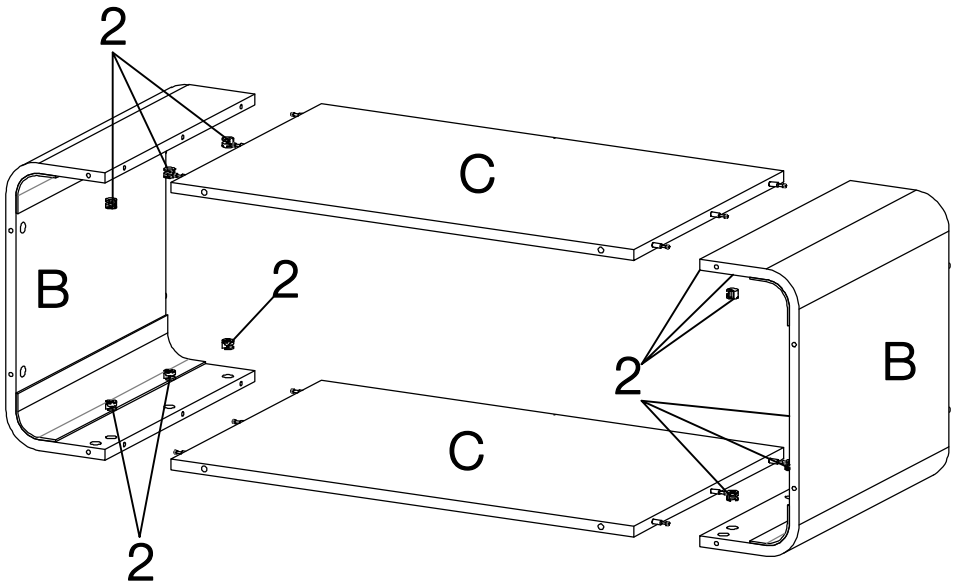

STEP 3

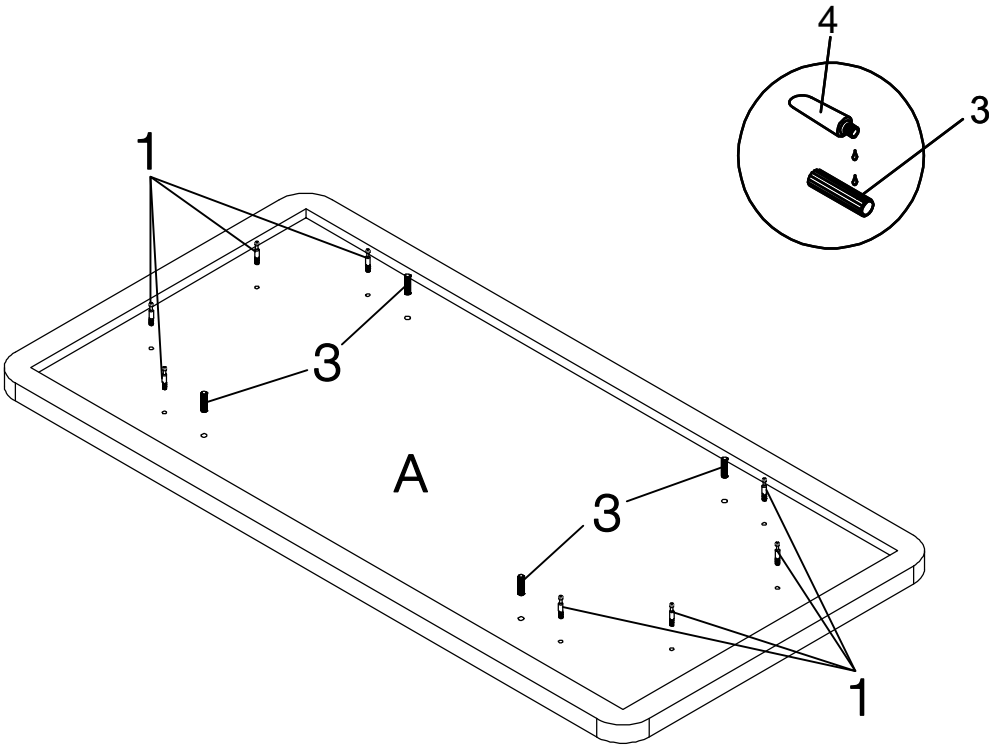

ASSEMBLY INSTRUCTIONS

STEP 4

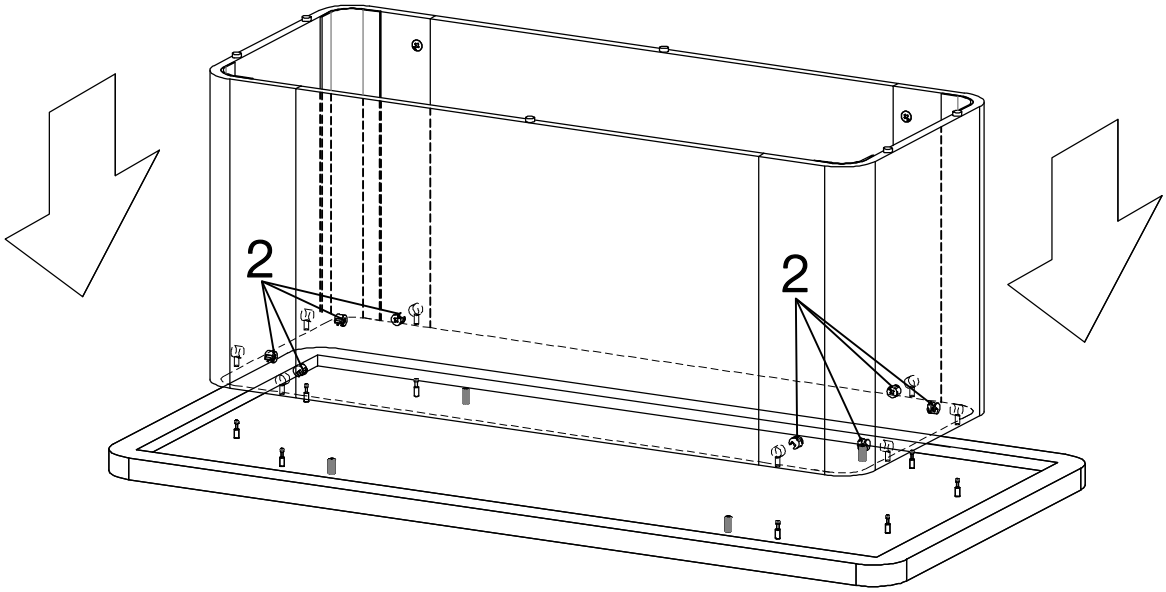

STEP 5

COMPLETE

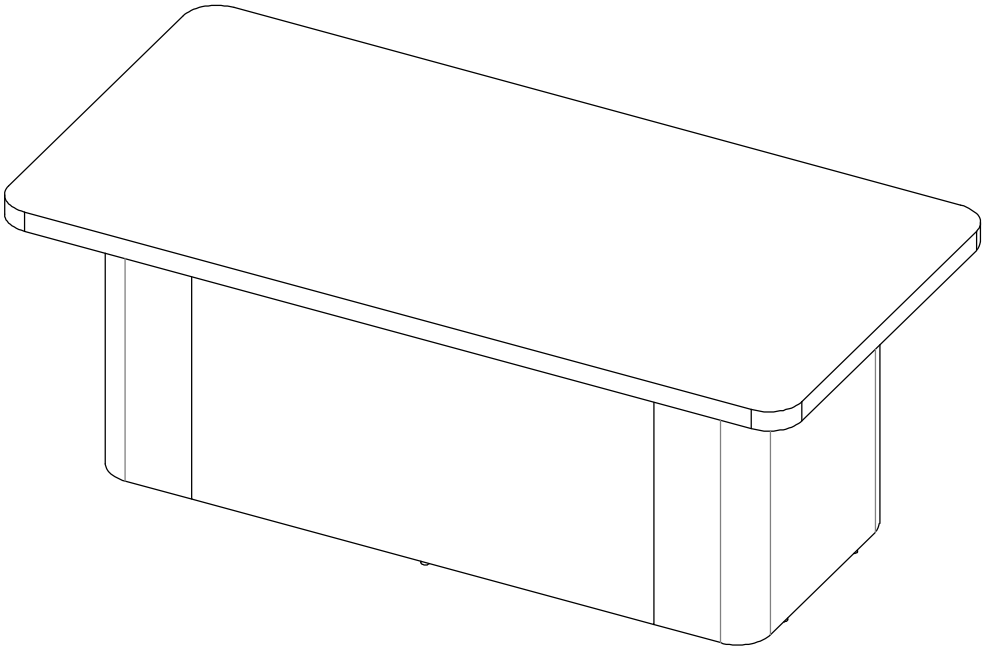

ASSEMBLY INSTRUCTIONS

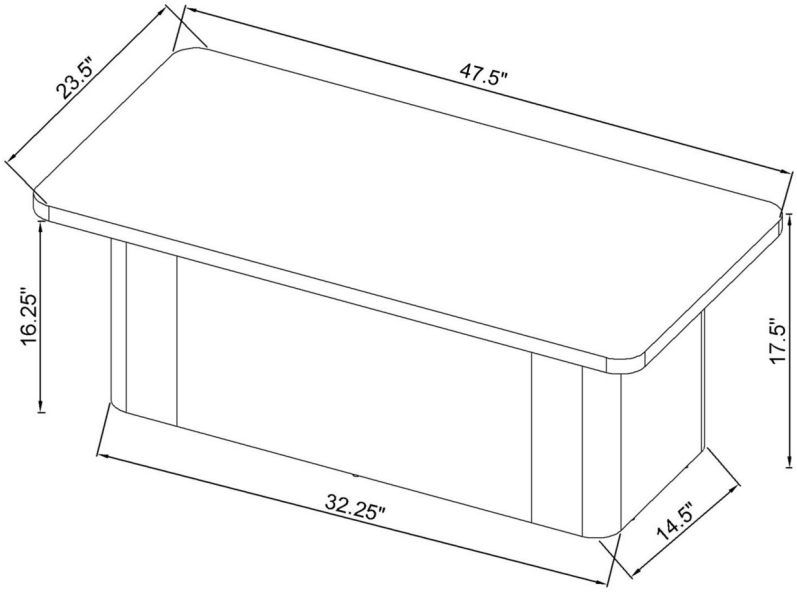

Note : Dimension tolerance ±5%