ASSEMBLY INSTRUCTIONS

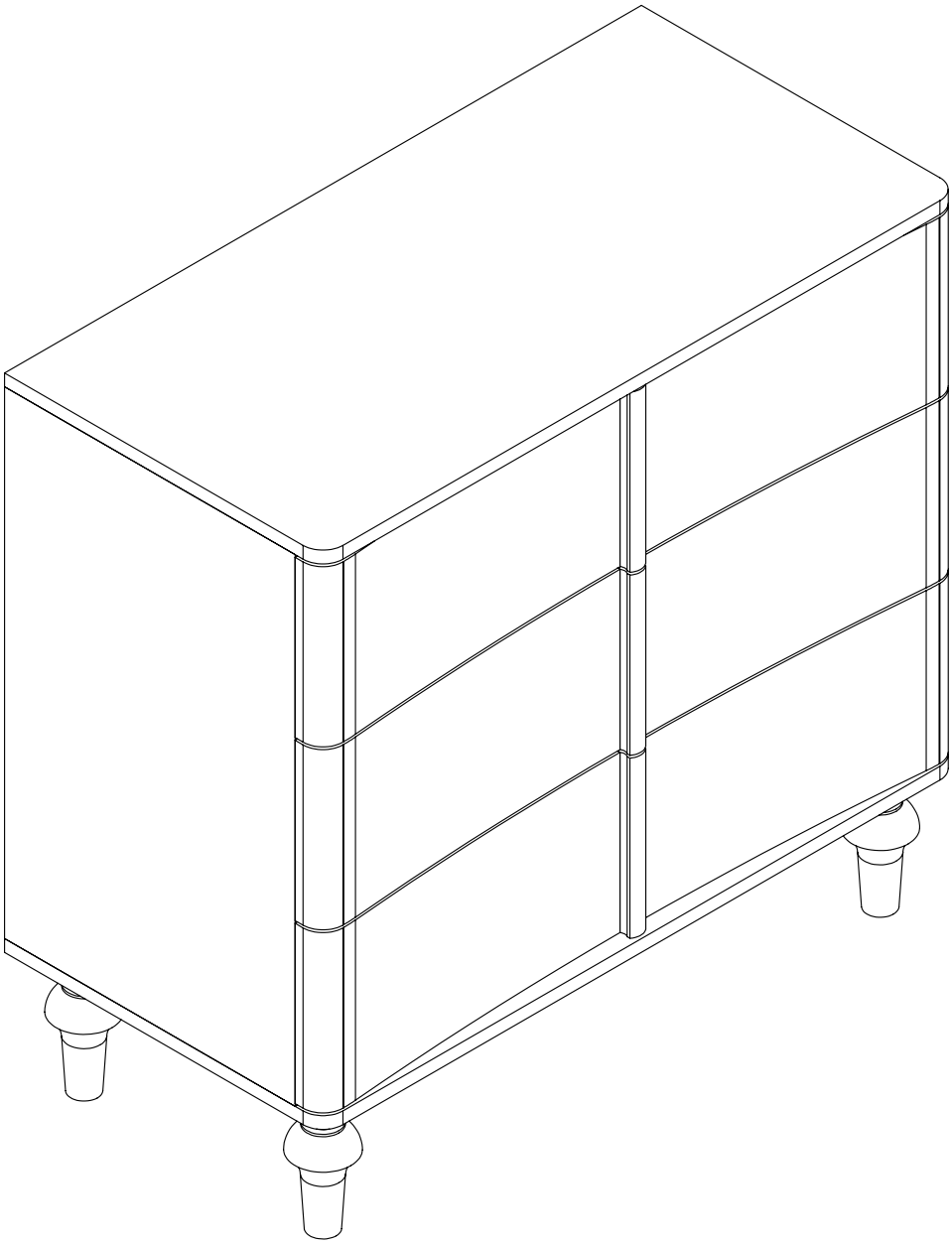

IMPORTANT NOTES

- For further assistance, please provide a screenshot of your order confirmation and contact us at **support@mi-din.com**.
- Read all assembly instructions carefully and thoroughly before beginning assembly or use. Retain this manual for future reference.
- Before starting assembly, verify that all parts and hardware listed in the Parts List are present. If any items are missing, please check inside the packaging for small boxes, pouches, or loose parts that may not have been opened.
- To protect your furniture, place all parts on a clean, flat, and smooth surface during assembly. Keep all packaging materials until assembly is fully completed.
- When moving the assembled product, lift it carefully—do not drag it—to avoid structural damage.
- Do not use this product if any parts are missing, damaged, or worn.
- This product is intended for use only on firm, level flooring.
- Periodically check and re-tighten all fittings as necessary to maintain stability.
- Do not use the product until all bolts and screws are firmly tightened and secured.

CAUTION

- Keep all small fittings and hardware out of reach of children, and ensure children stay away from the assembly area at all times.
- Do not use power tools to assemble your furniture. Power tools may strip or damage the parts.

CARE & MAINTENANCE

- Do not place hot items directly onto the furniture surface.
- Avoid using harsh chemical cleaners or abrasive polishes. Clean only with appropriate products.
- Do not expose the furniture to direct sunlight, which may cause fading or damage.
- Keep the furniture away from heating or cooling vents to prevent warping or cracking.
- Do not write on the furniture surface without a protective, padded barrier.
- This product is designed for indoor use only. Do not place outdoors.
- For residential use only. Not intended for commercial or institutional use.
- To remove stains, gently clean with a mild soap solution and a soft, damp cloth.
- Children should not climb, stand, or jump on the furniture.
- Wipe away dust and spills promptly using a clean, non-colored, lint-free cloth.

CAM-LOCK

Insert the cam dowel into the panel and tighten until the shoulder is flush with the surface.
Ensure there is no gap between the dowel shoulder and the panel.
Do not overtighten or leave loose (see examples below).

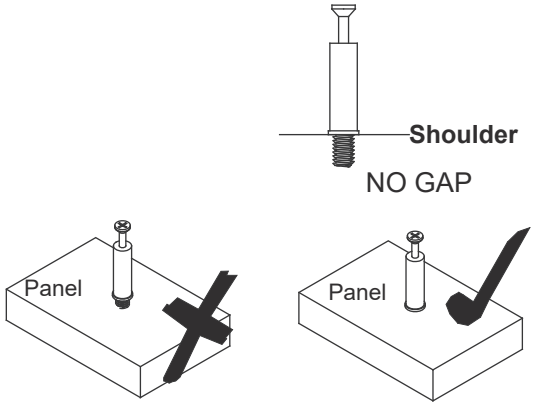

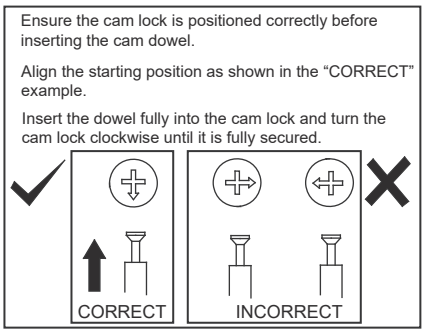

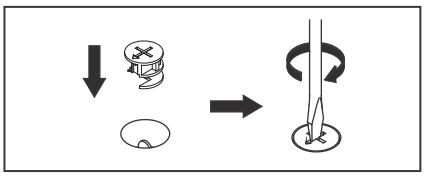

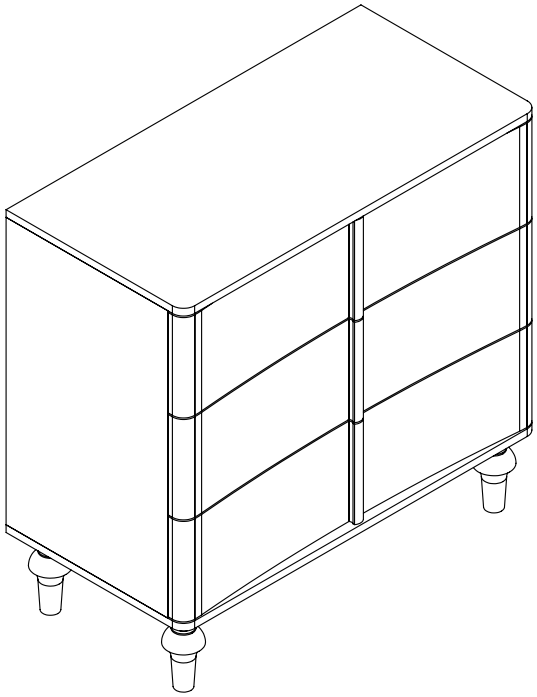

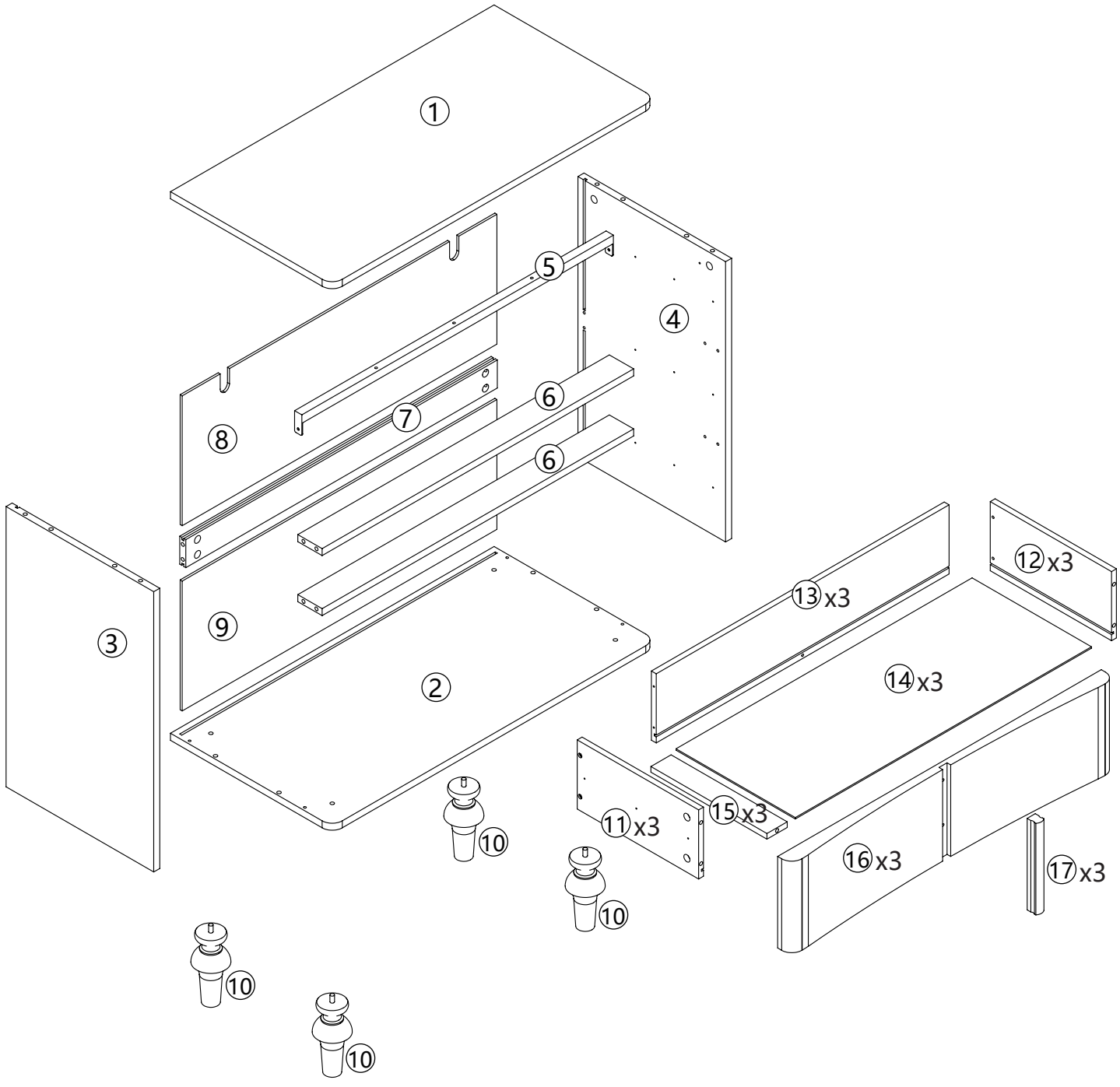
1
5
4
6
7
8
6
3
9
2
12 x3
13 x3
14 x3
11 x3
15 x3
16 x3
17 x3
10
10
10
10

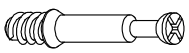 Ø5x35mm	 Ø15x10mm	 Ø4x40mm	 Ø4x20mm	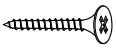 Ø4x30mm
A X31+3	B X31+3	C X6	D X6	E X18+1
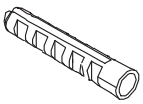 Ø8x40mm	 Ø8x30mm	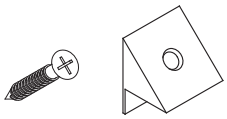 Ø3x12mm	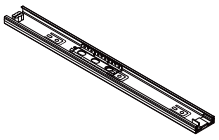	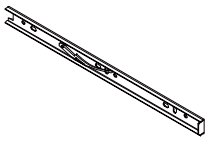
F X2	G X8	H X8	I X6	J X6
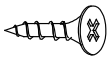 Ø4x14mm	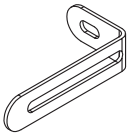	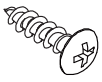 Ø4x12mm	 Ø3.5x12mm	
K X2	L X2	M X2	N X36+3	

STEP 1

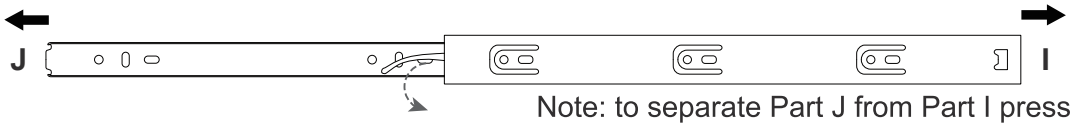

Note: to separate Part J from Part I press the black clip and slide Part J out.

Need to assemble drawer runner in the correct pilot hole as the diagram indicates.

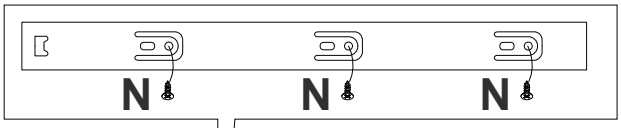

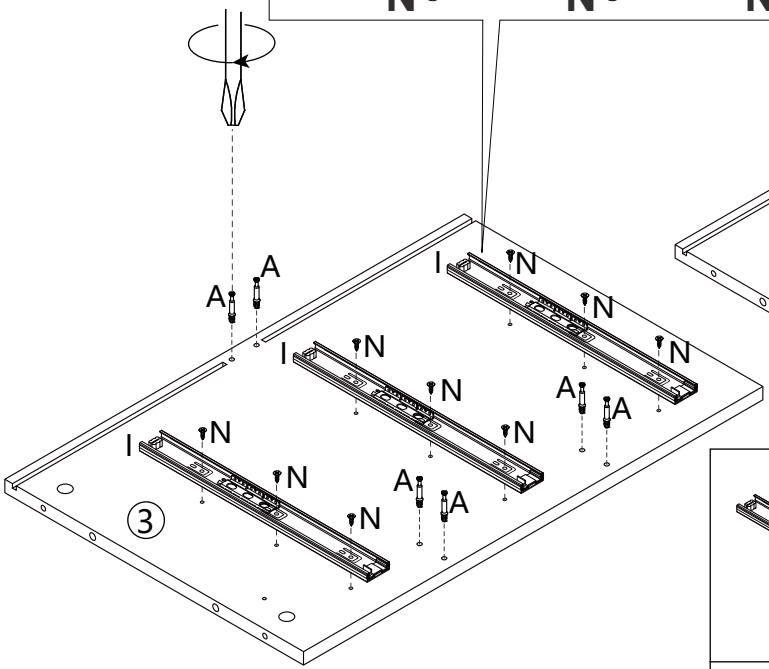

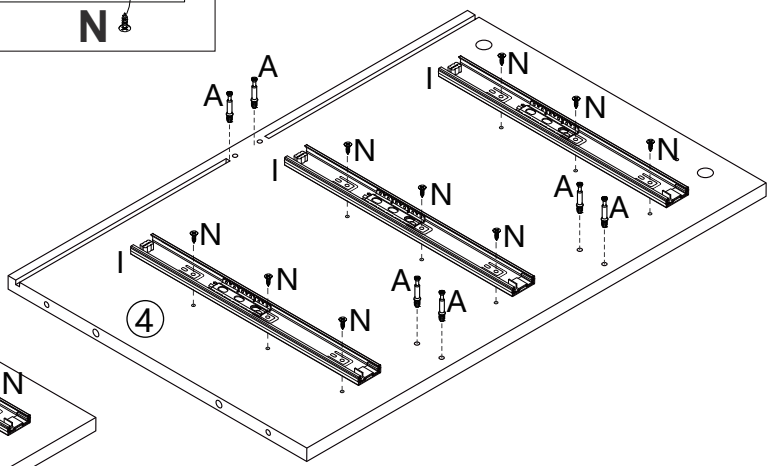

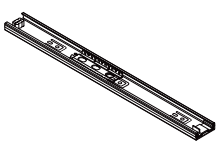	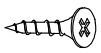 Ø3.5x12mm	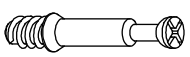 Ø5x35mm
I X6	N X18	A X12

STEP 2

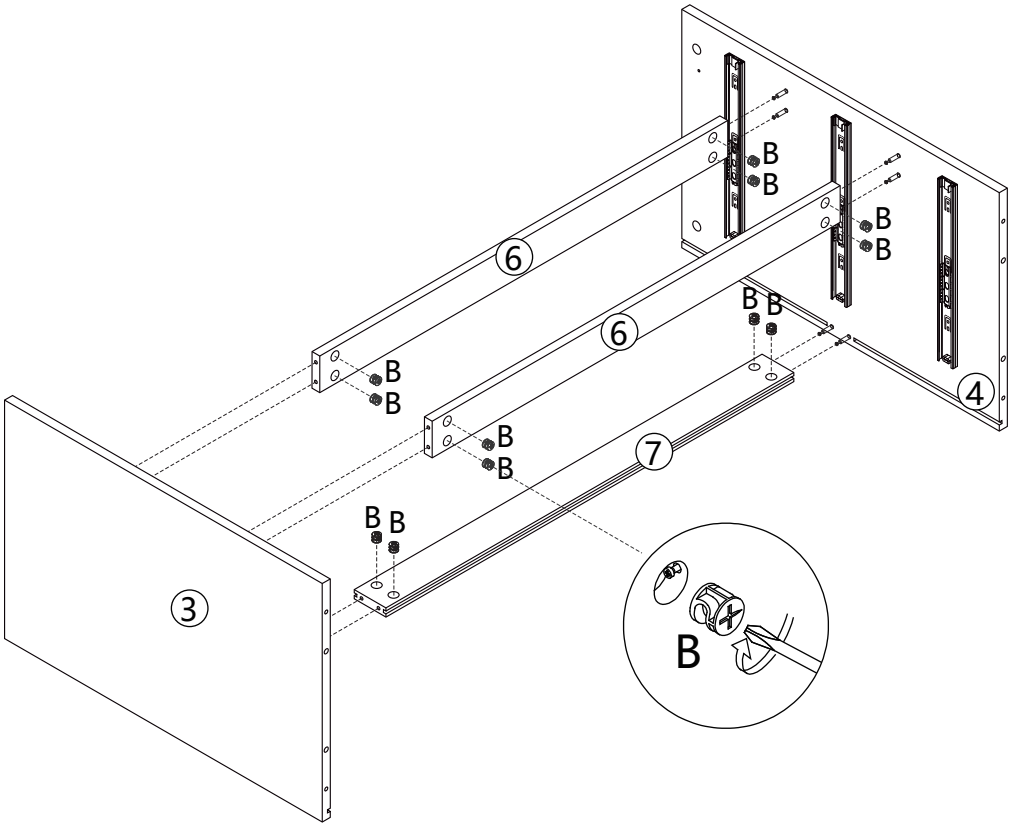

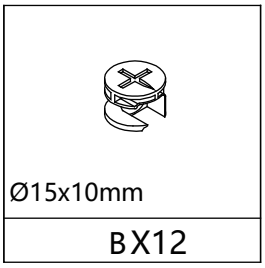

STEP 3

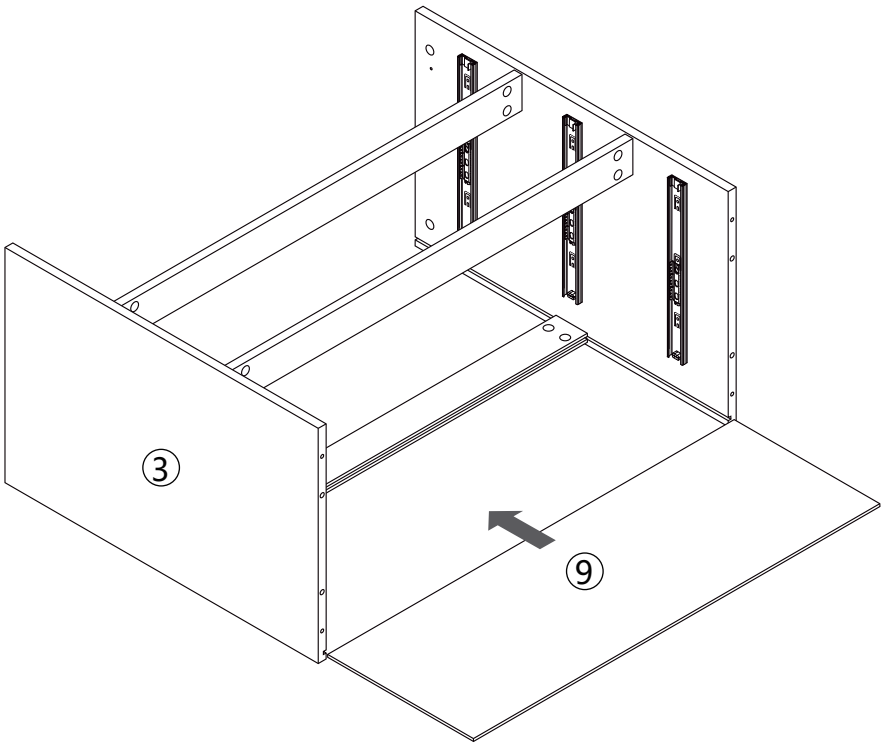

STEP 4

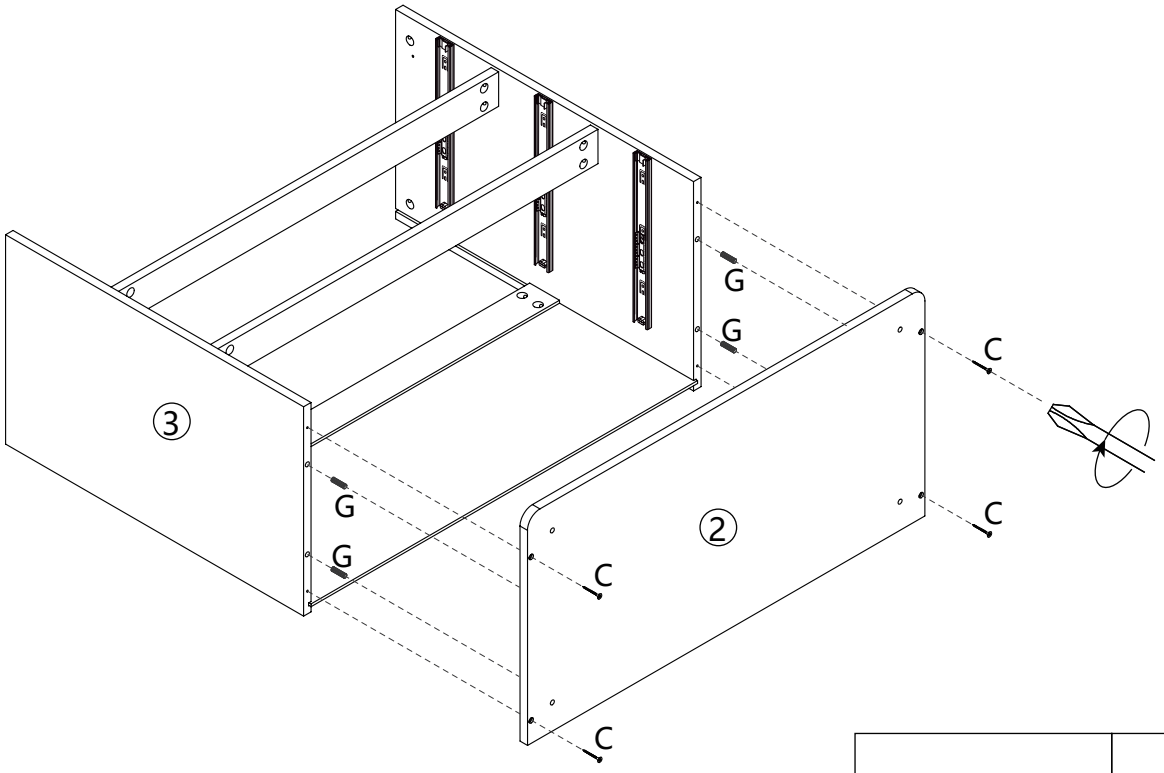

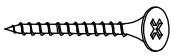 Ø4x40mm	 Ø8x30mm
C X4	G X4

STEP 5

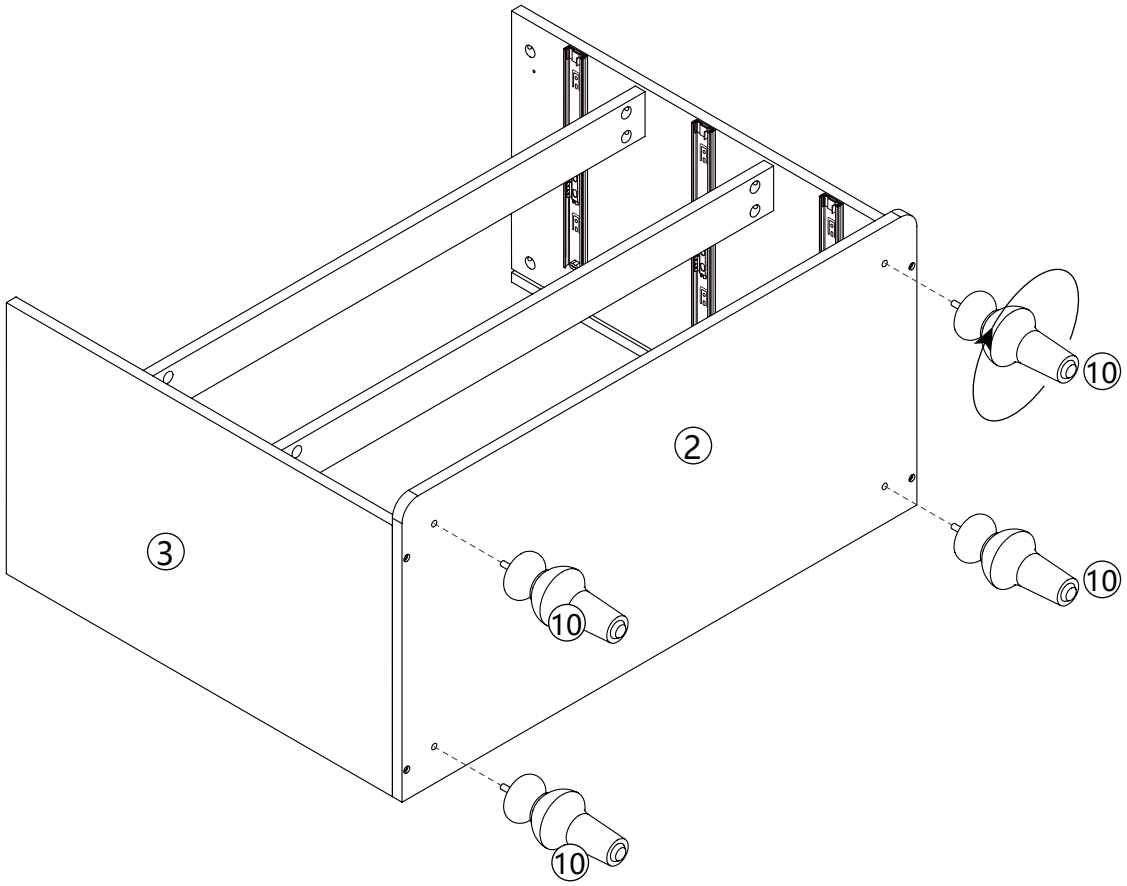

STEP 6

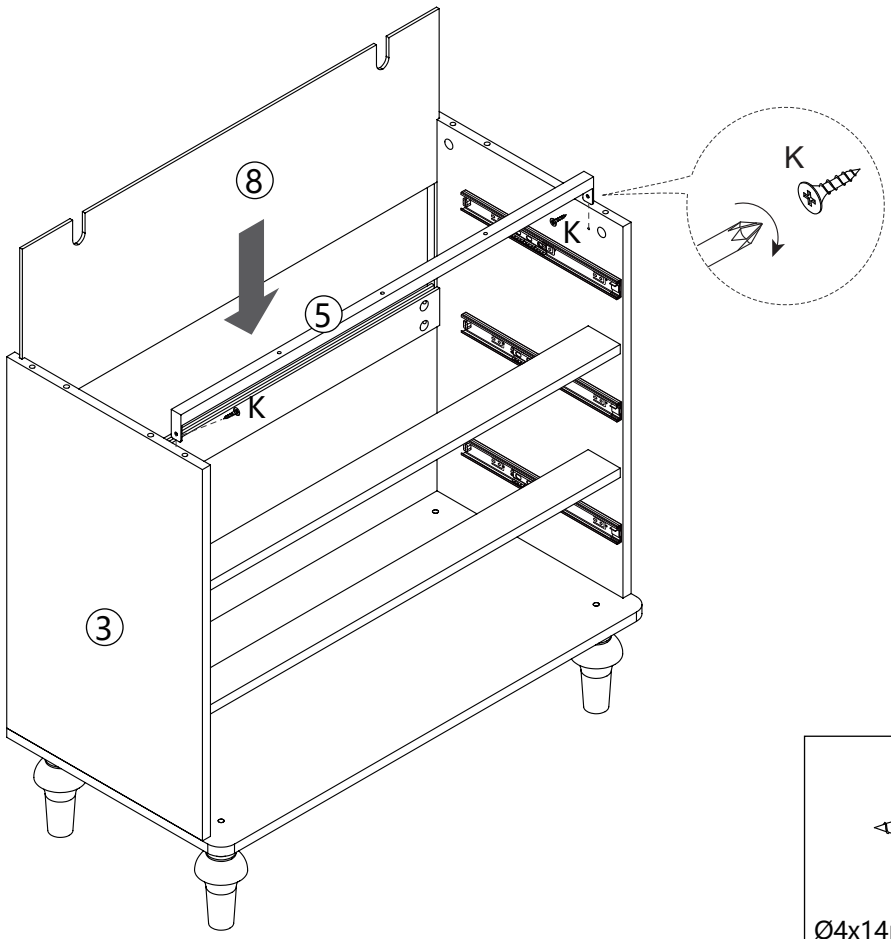

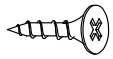

Ø4x14mm

K X2

STEP 7

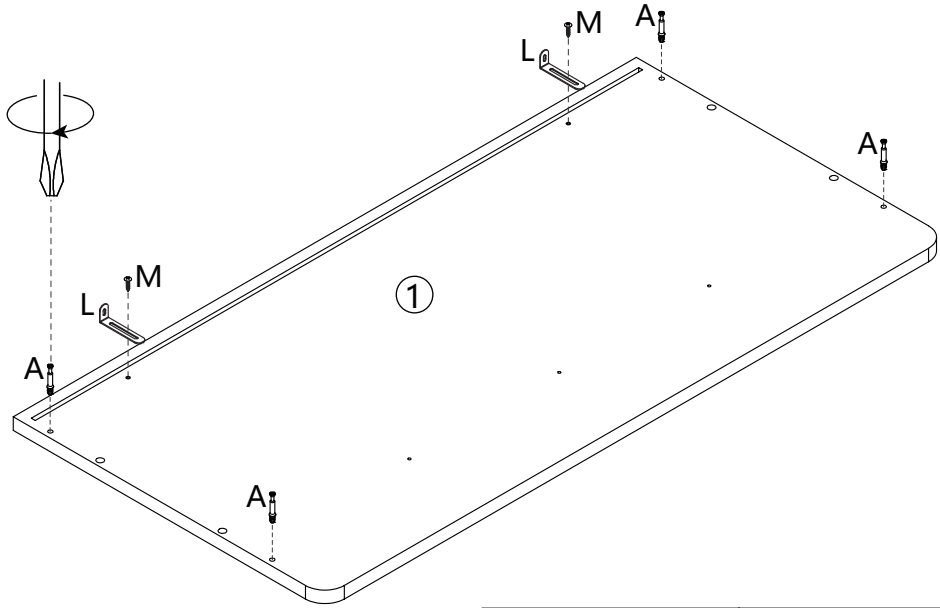

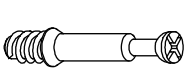

Ø5x35mm

A X4

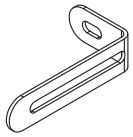

L X2

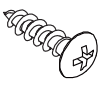

Ø4x12mm

M X2

STEP 8

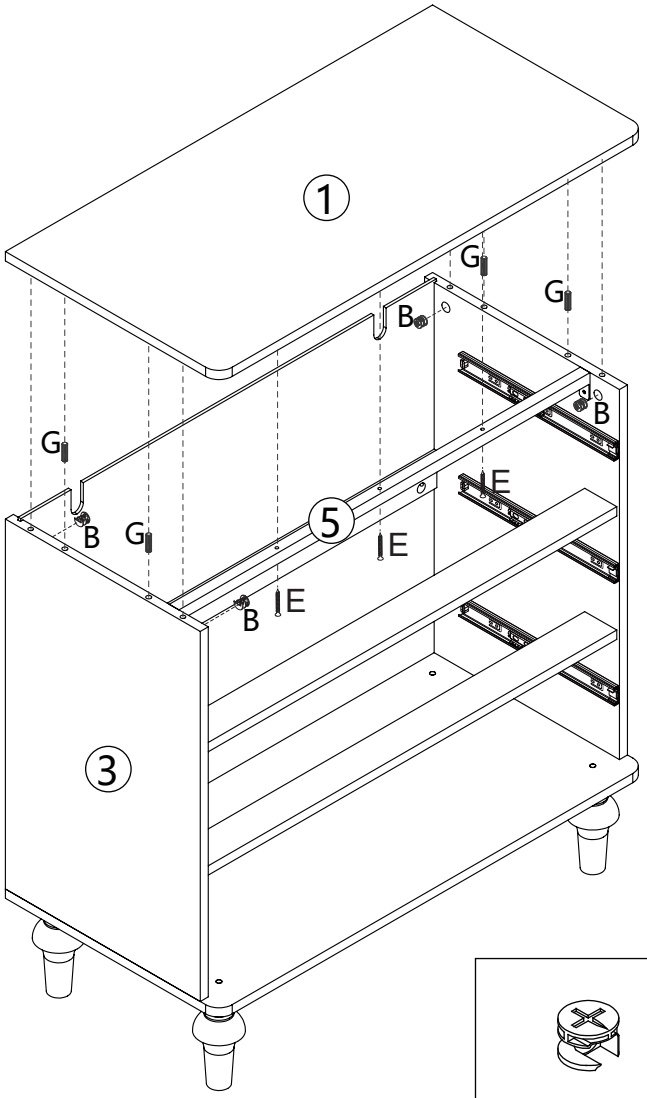

		
Ø15x10mm	Ø8x30mm	Ø4x30mm
B X4	G X4	E X3

STEP 9

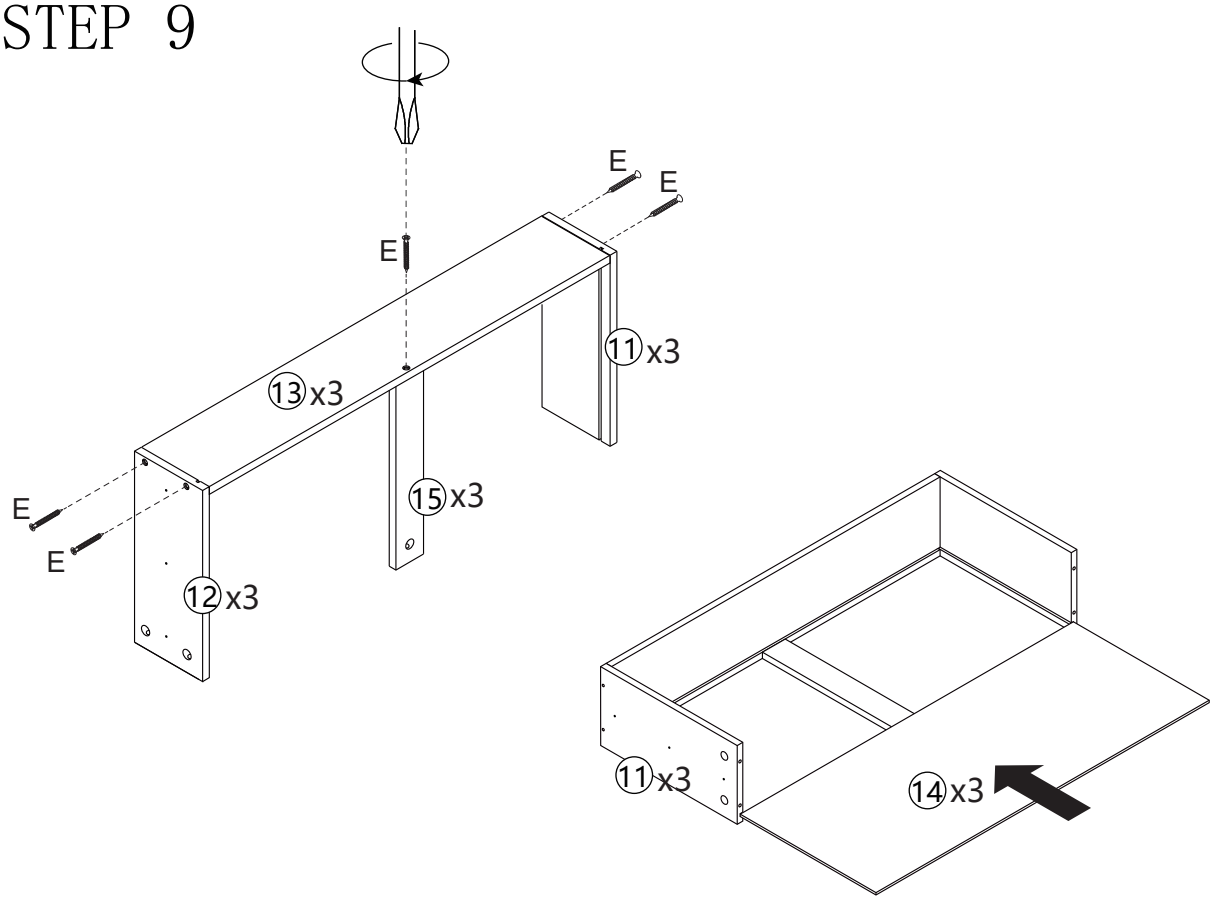

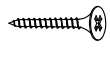
Ø4x30mm
E X15

STEP 10

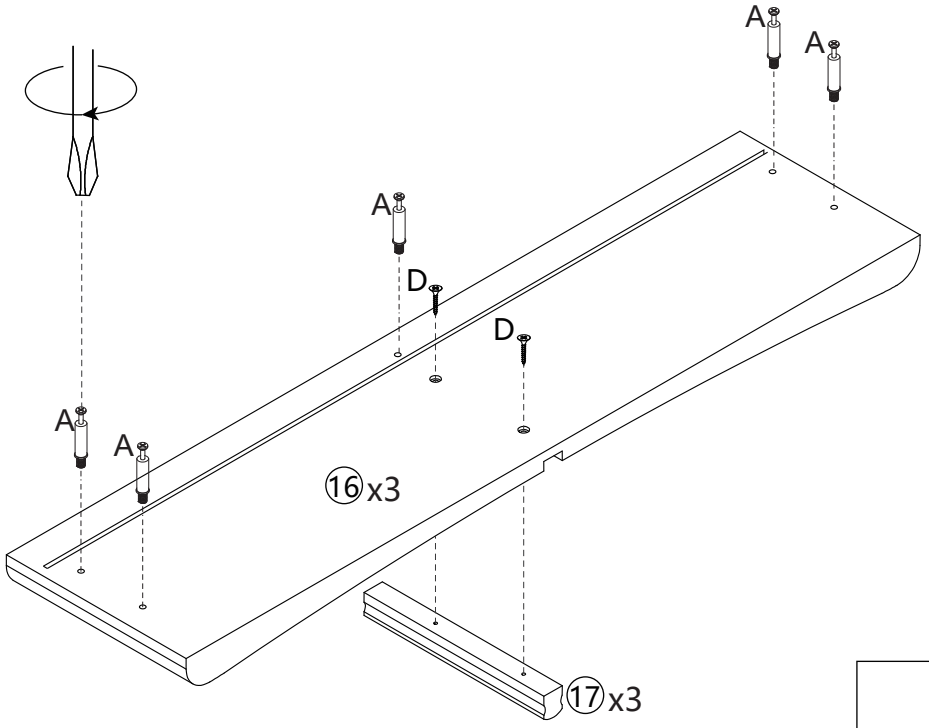

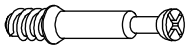 Ø5x35mm	 Ø4x20mm
A X15	D X6

STEP 11

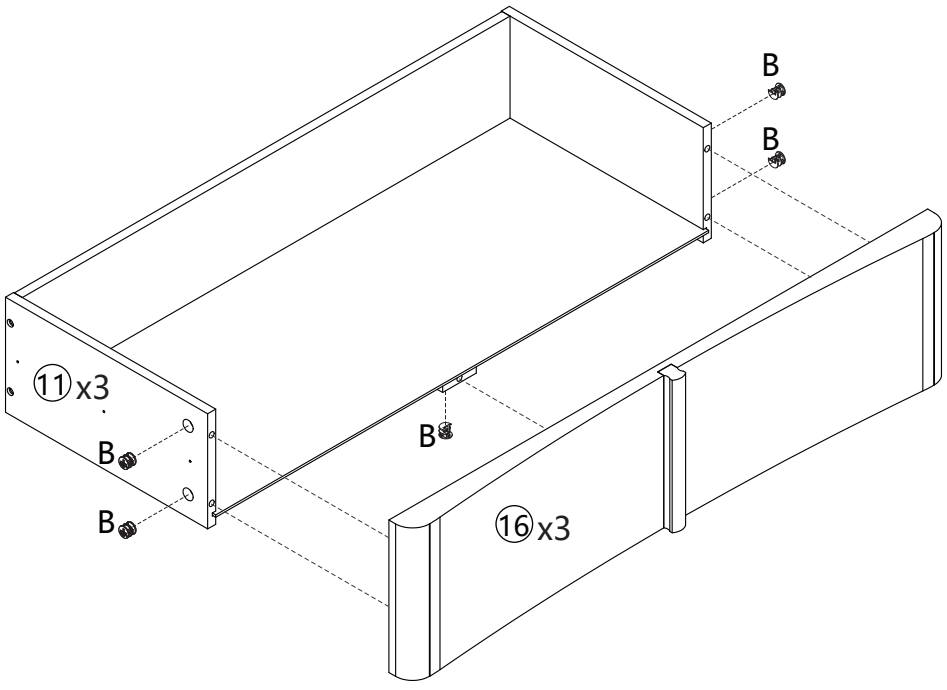

 Ø15x10mm
B X15

STEP 12

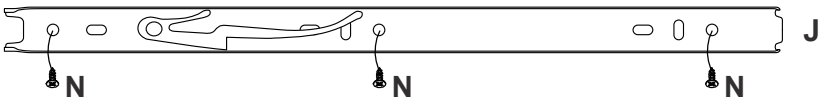

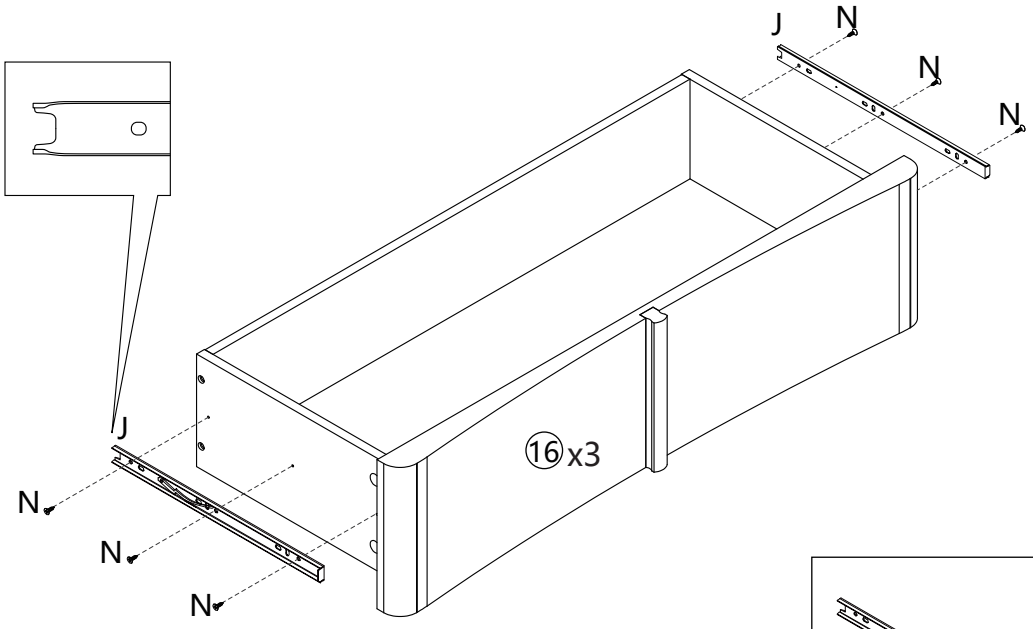

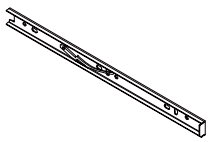	 Ø3.5x12mm
J X6	N X18

STEP 13

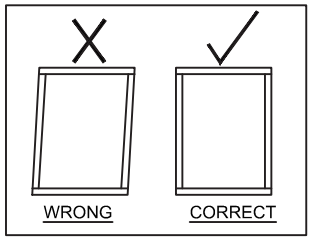

Note: Before tightening the self-tapping screws, ensure the frame is properly aligned and square.

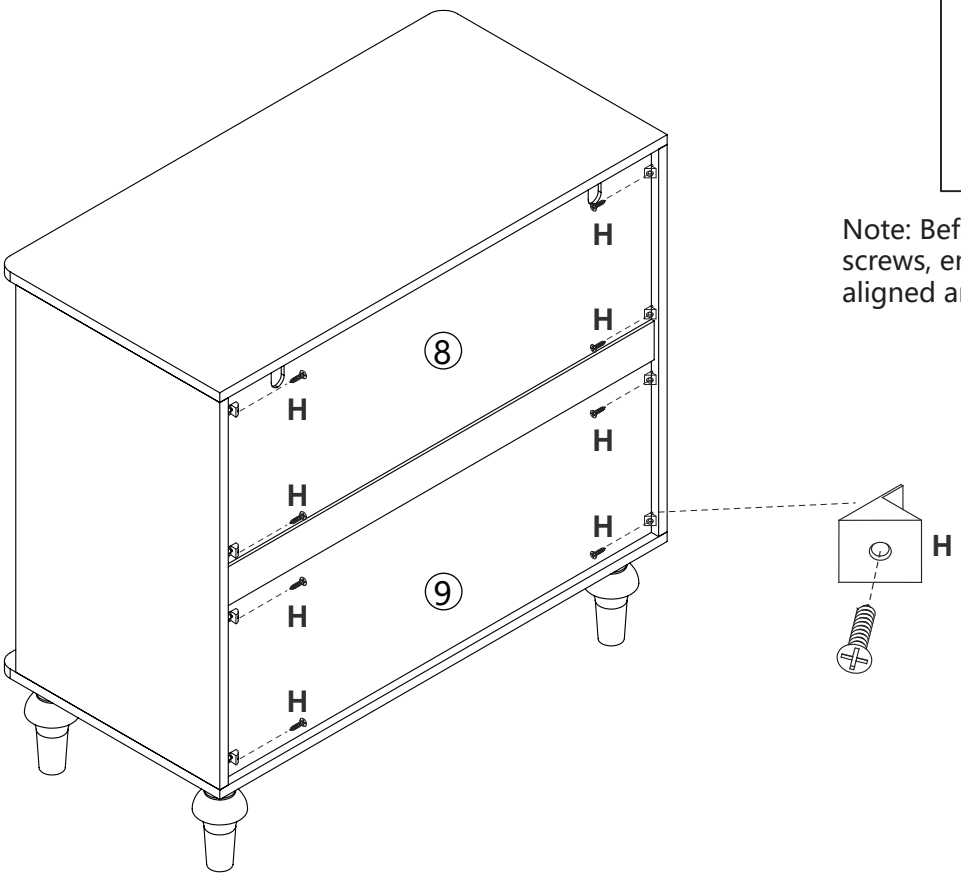

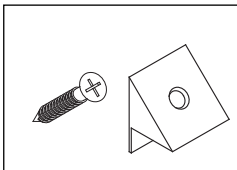

STEP 14

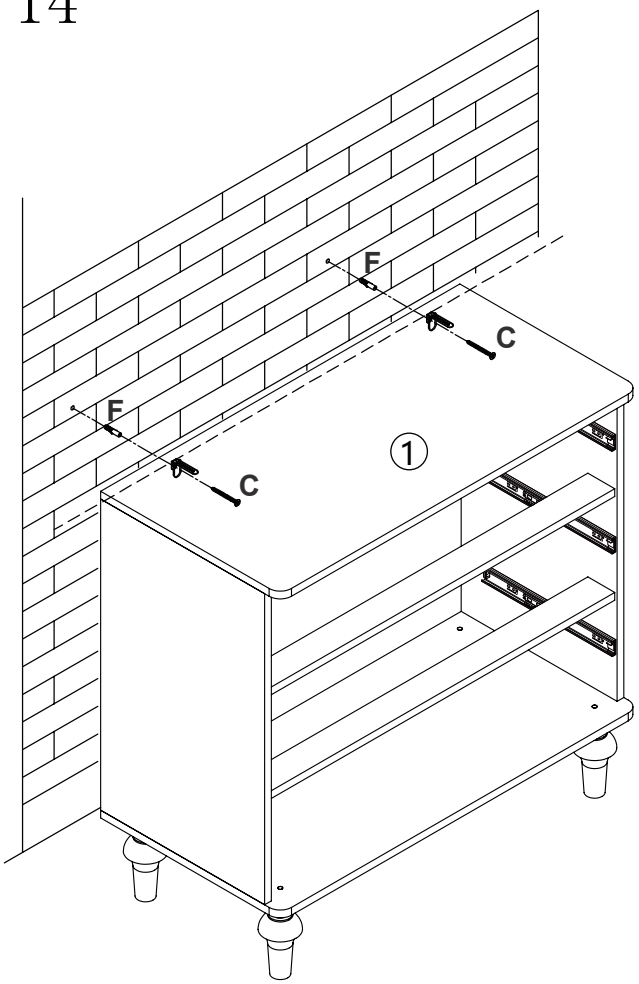

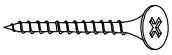	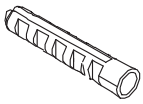
Ø4x40mm	Ø8x40mm
C X2	F X2

STEP 15

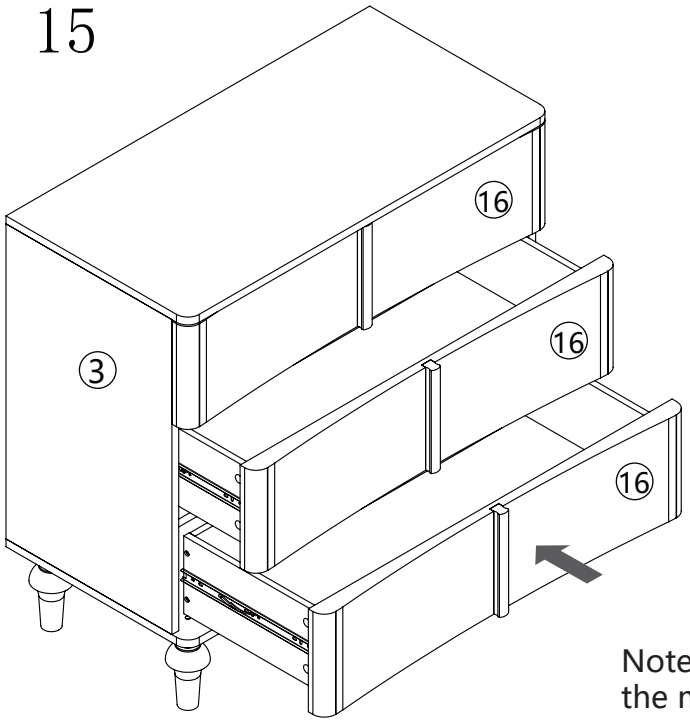

Note: When installing the drawers, please pull the movable part of the cabinet-side slide fully outward. Only then can the drawer-side slide be properly engaged and the drawer installed smoothly.

