ASSEMBLY INSTRUCTIONS

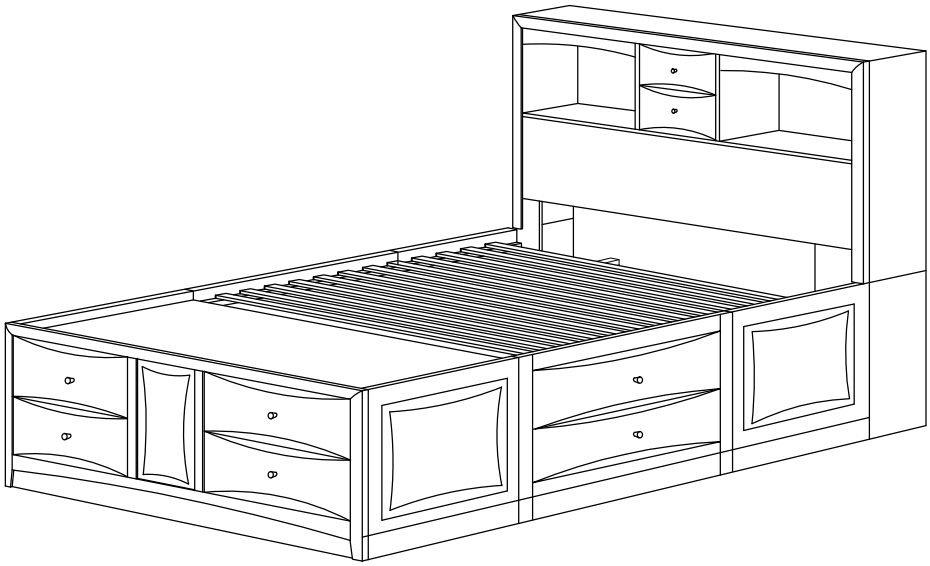

Queen Storage Bed

ASSEMBLY INSTRUCTIONS

ASSEMBLY TIPS:

1. Remove hardware from box and sort by size.
2. Please check to see that all hardware and parts are present prior to start of assembly.
3. Please follow attached instructions in the same sequence as numbered to assure fast & easy assembly.

WARNING!

1. Don't attempt to repair or modify parts that are broken or defective. Please contact the store immediately.
2. This product is for home use only and not intended for commercial establishments.

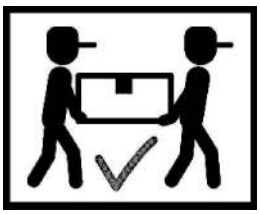

ASSEMBLY TIME	50 MINUTES

PARTS IDENTIFICATION

B1 (BOX 1)

1	HEADBOARD PANEL	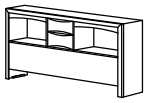	1PC
2L	LEFT HEADBOARD LEG		1PC
2R	RIGHT HEADBOARD LEG		1PC

B2 (BOX 2)

5	STORAGE FOOTBOARD	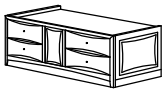	1PC
6	ROLL SLAT (12PCS)		1SET
7	BOTTOM TRESTLE BAR		1PC
8	CENTER RAIL		1PC
9	CENTER RAIL SUPPORT WITH LEVELER		2PCS
10	CROSSBAR		1PC

ASSEMBLY INSTRUCTIONS

ASSEMBLY TIPS:

1. Remove hardware from box and sort by size.
2. Please check to see that all hardware and parts are present prior to start of assembly.
3. Please follow attached instructions in the same sequence as numbered to assure fast & easy assembly.

WARNING!

1. Don't attempt to repair or modify parts that are broken or defective. Please contact the store immediately.
2. This product is for home use only and not intended for commercial establishments.

B3 (BOX 3)

3L	LEFT SIDE PANEL		1PC
3R	RIGHT SIDE PANEL		1PC
4	CENTER BOARD	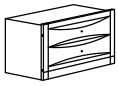	2PCS
HB	FROM BOX 1 HEADBOARD COMPLETE	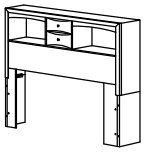	1PC
5	FROM BOX 2 STORAGE FOOTBOARD	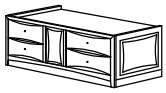	1PC

ASSEMBLY INSTRUCTIONS

ASSEMBLY TIPS:

1. Remove hardware from box and sort by size.
2. Please check to see that all hardware and parts are present prior to start of assembly.
3. Please follow attached instructions in the same sequence as numbered to assure fast & easy assembly.

WARNING!

1. Don't attempt to repair or modify parts that are broken or defective. Please contact the store immediately.
2. This product is for home use only and not intended for commercial establishments.

HARDWARE IDENTIFICATION

A	**ALLEN WRENCH** **(M4 x 110mm - BLK)**		**1PC**
B	**SHORT BOLT** **(M6 x 60mm - BLK)**	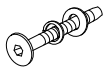	**10PCS**
C	**LONG BOLT** **(M6 x 80mm - BLK)**	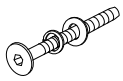	**8PCS**
D	**WOOD DOWEL** **(M8 x 30mm)**		**12PCS**
E	**LONG FLAT HEAD SCREW** **(M4 x 32mm - BLK)**		**26PCS**
F	**SHORT FLAT HEAD SCREW** **(M4 x 16mm - BLK)**		**6PCS**
G	**SHORT BOLT** **(M6 x 60mm - BLK)**		**2PCS**

NOTE:

Phillips head screw driver is required in the assembly process; however, manufacturer does not provide this item.

ASSEMBLY INSTRUCTIONS

STEP 1

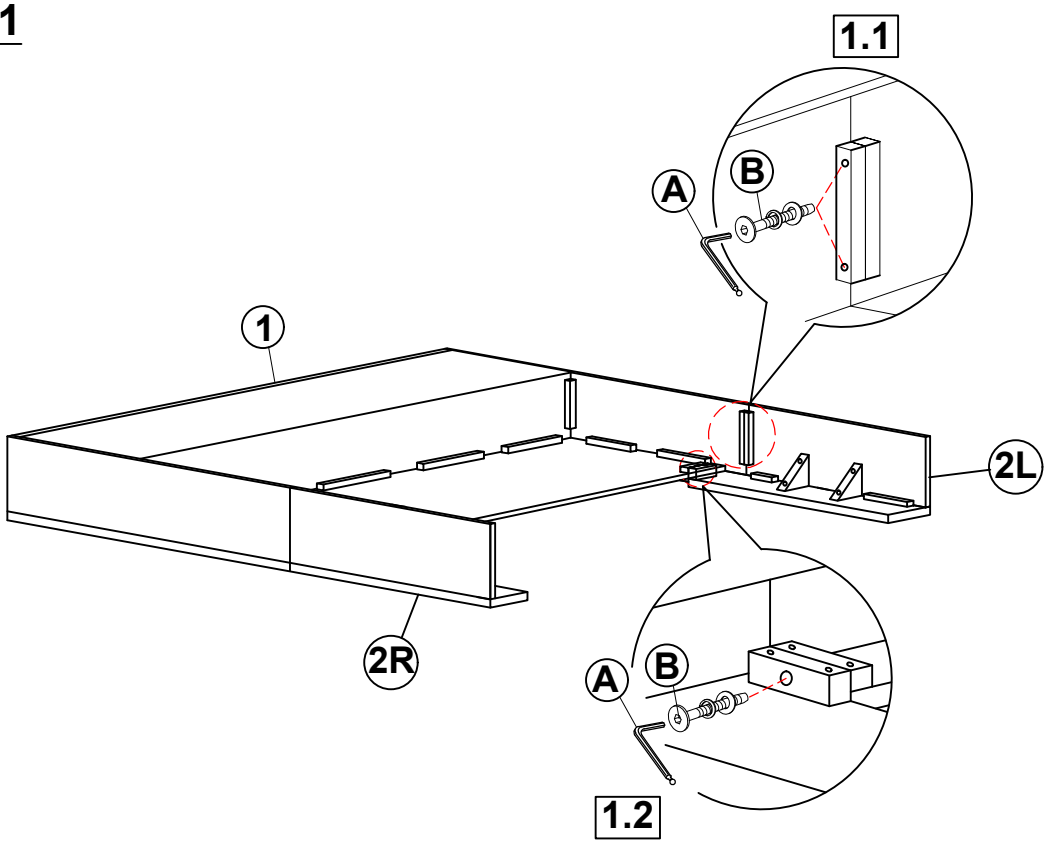

STEP 2

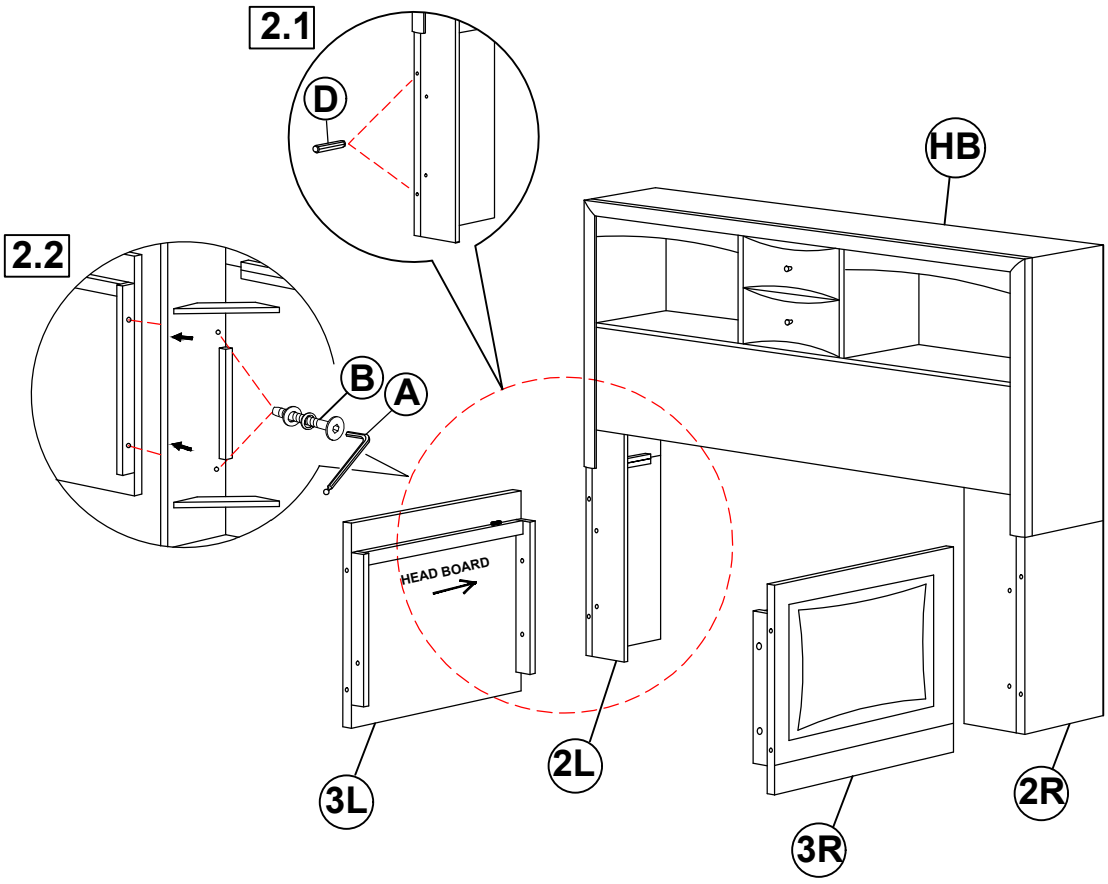

ASSEMBLY INSTRUCTIONS

STEP 3

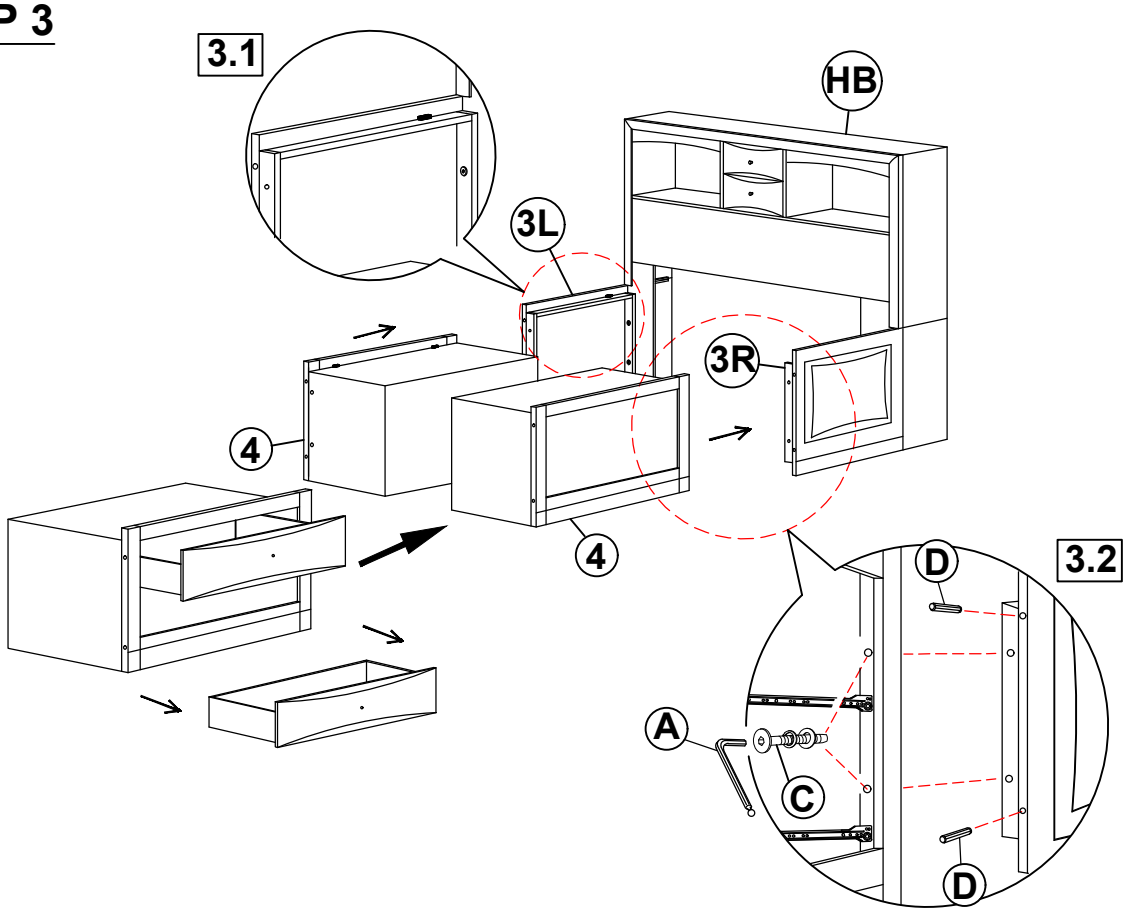

STEP 4

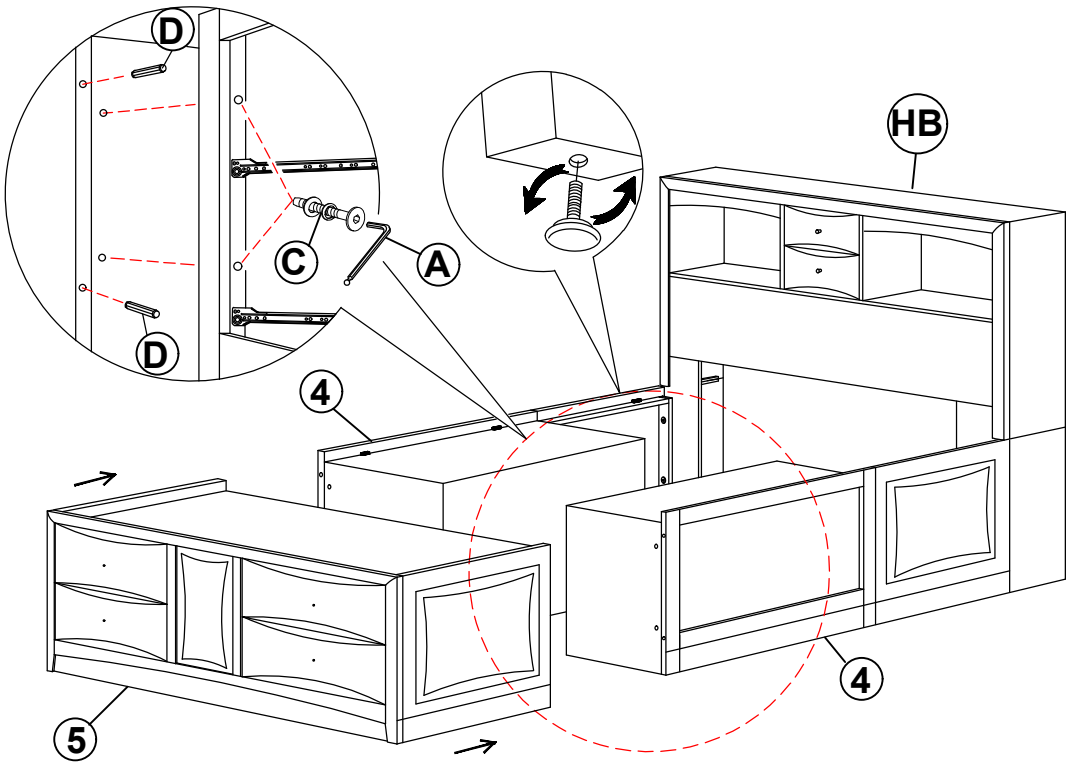

ASSEMBLY INSTRUCTIONS

STEP 5

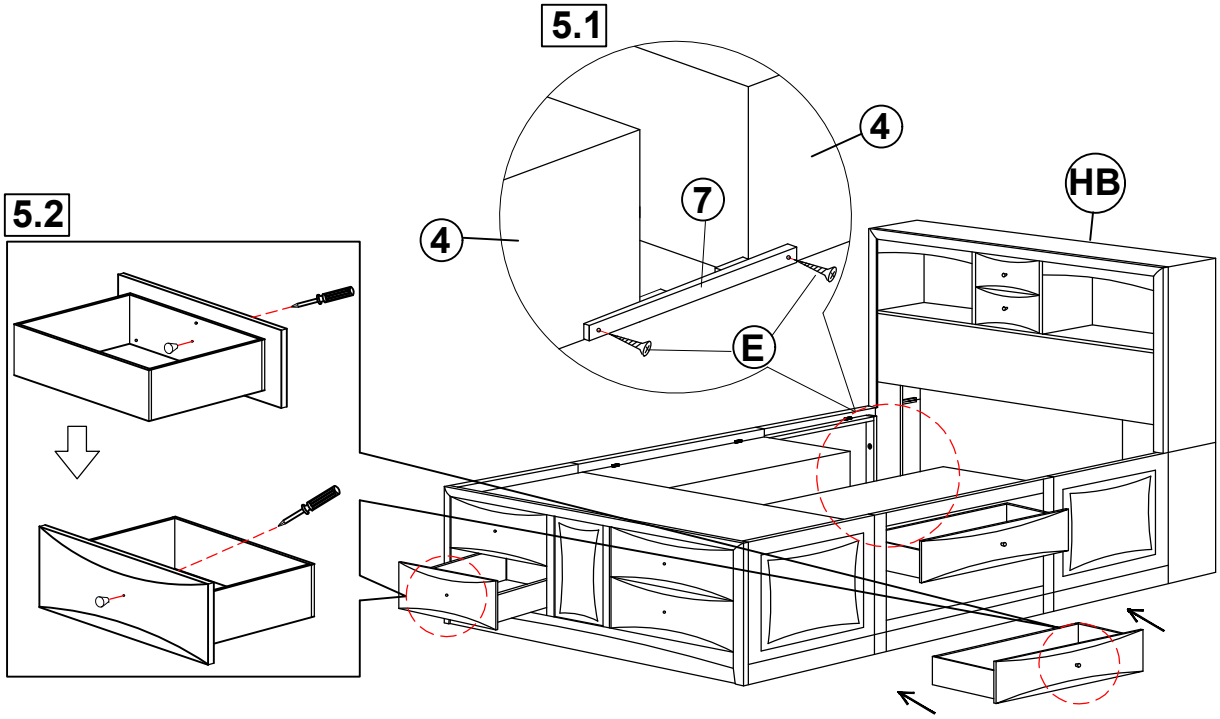

STEP 6

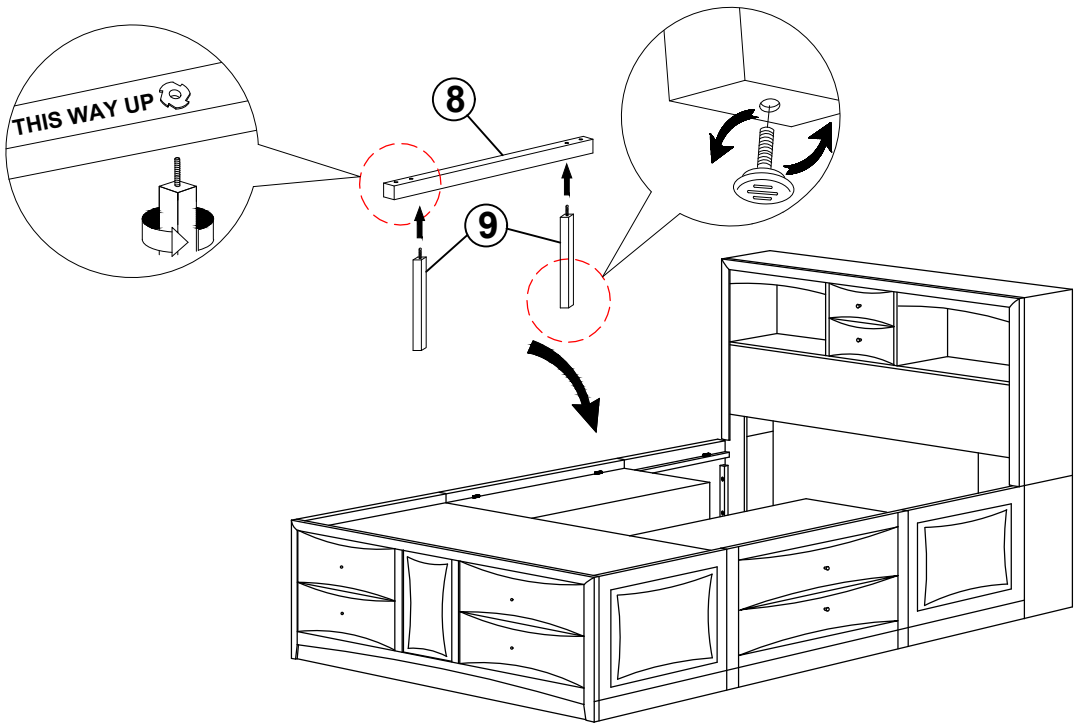

ASSEMBLY INSTRUCTIONS

STEP 7

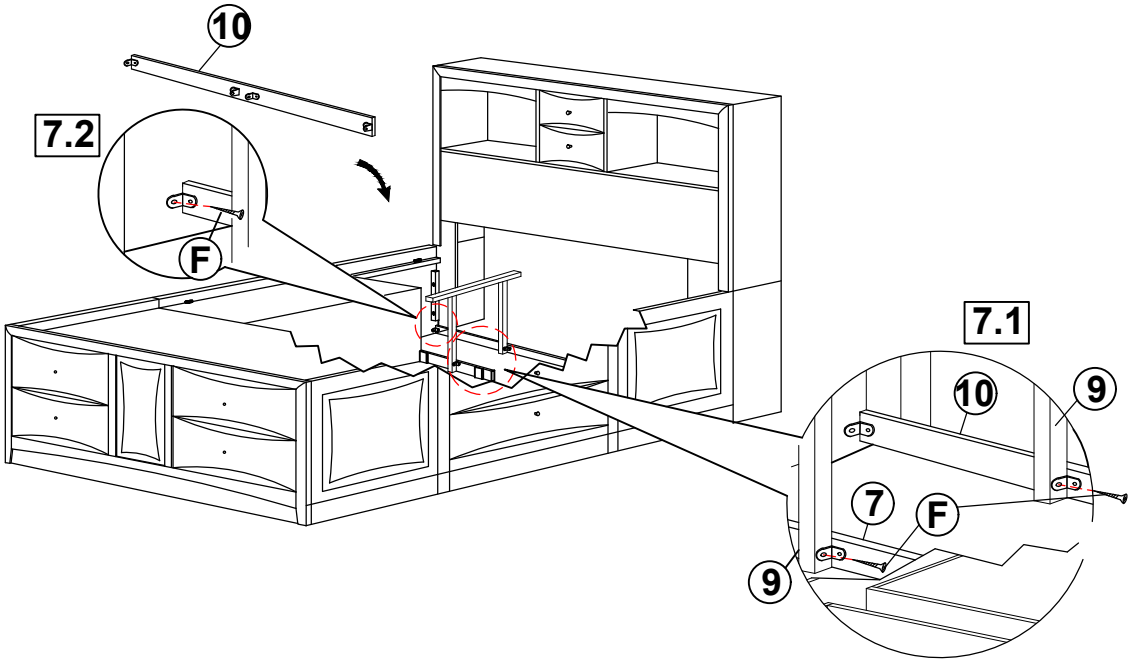

STEP 8

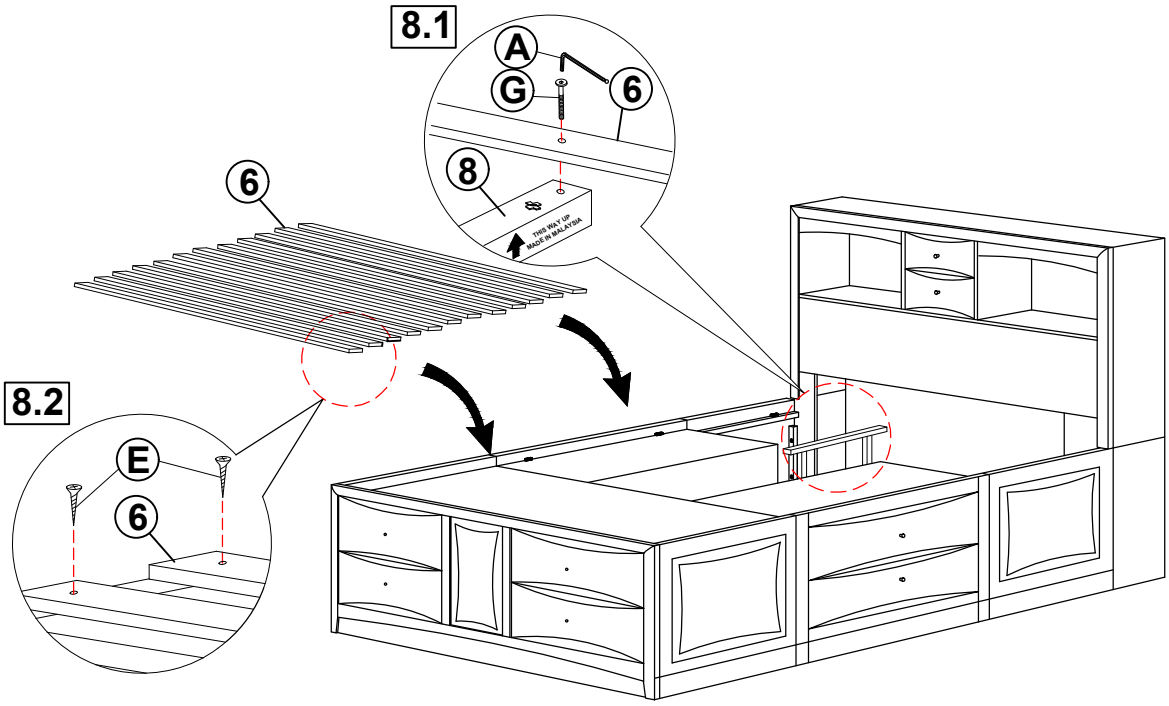

STEP 9
COMPLETE

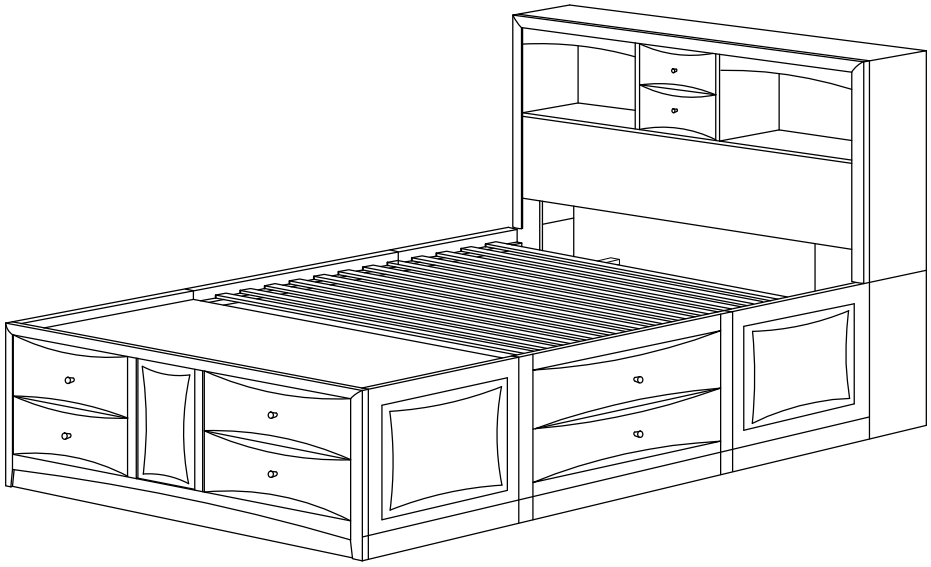

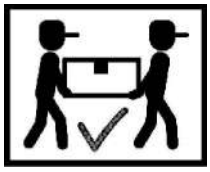

INNER SIZE OF DRAWER A : 4.1" x 8.3" x 12.6"
INNER SIZE OF DRAWER B : 5.7" x 15" x 29.3"
INNER SIZE OF DRAWER C : 5.7" x 15" x 21.8"

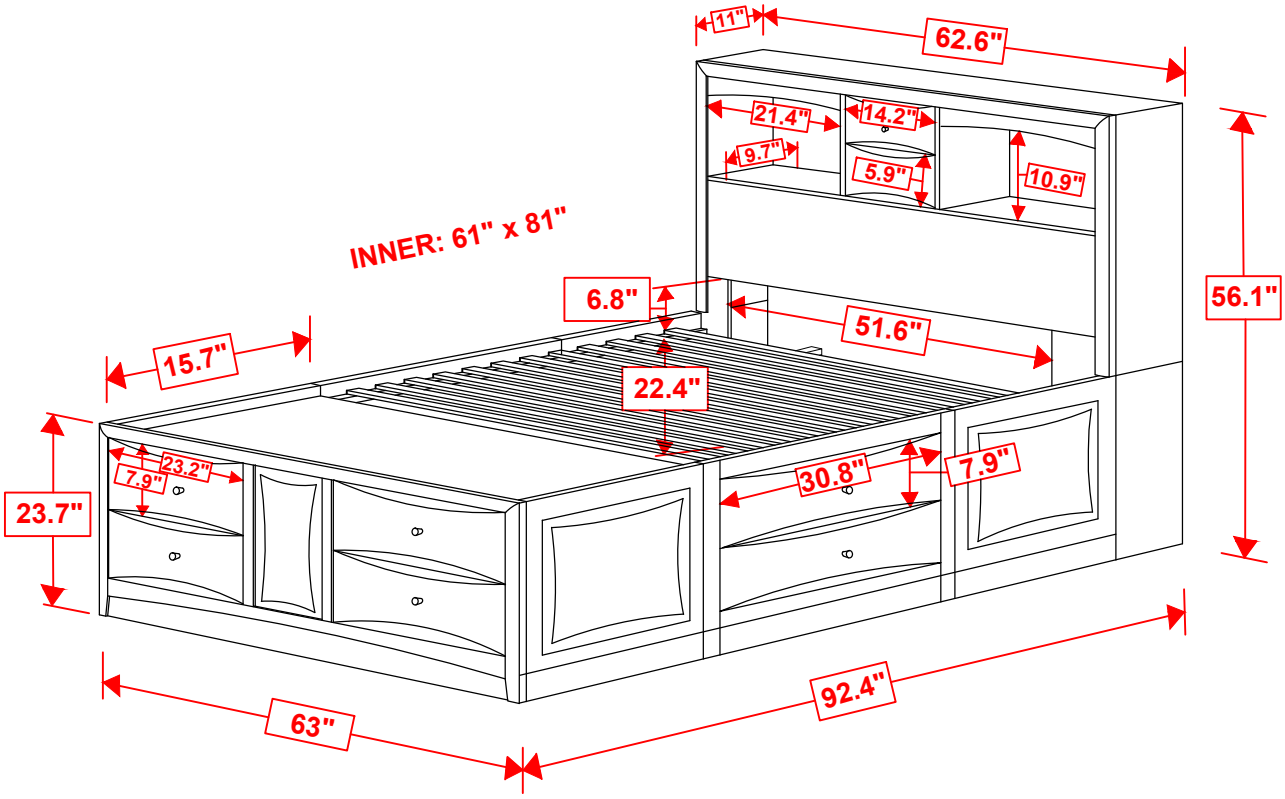

NOTE : DIMENSION TOLERANCE ± 5%

ASSEMBLY INSTRUCTIONS

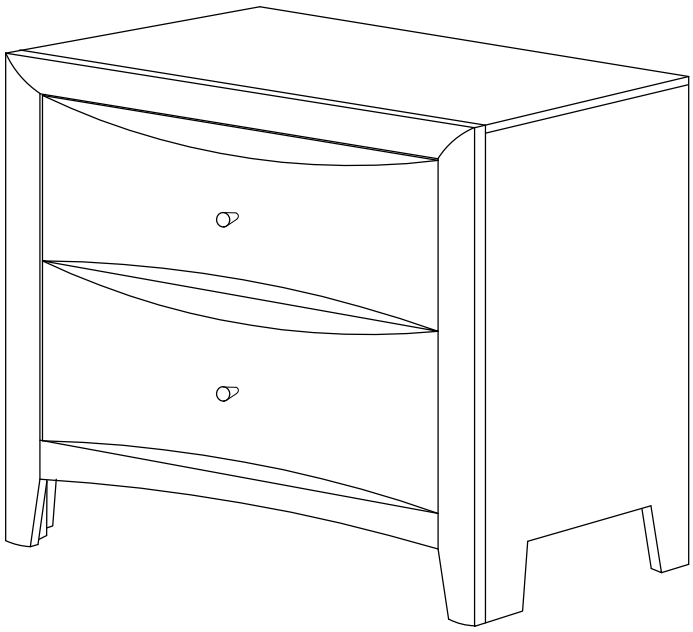

Nightstand

ASSEMBLY INSTRUCTIONS

ASSEMBLY TIPS:

1. Remove hardware from box and sort by size.
2. Please check to see that all hardware and parts are present prior to start of assembly.
3. Please follow attached instructions in the same sequence as numbered to assure fast & easy assembly.

WARNING!

1. Don't attempt to repair or modify parts that are broken or defective. Please contact the store immediately.
2. This product is for home use only and not intended for commercial establishments.

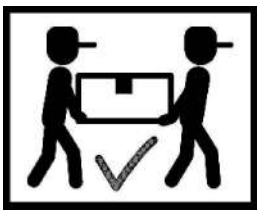

ASSEMBLY TIME	10 MINUTES

PARTS IDENTIFICATION

A	NIGHTSTAND	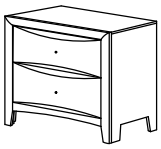	1PC

NOTE:

Phillips head screw driver is required in the assembly process; however, manufacturer does not provide this item.

ASSEMBLY INSTRUCTIONS

STEP 1

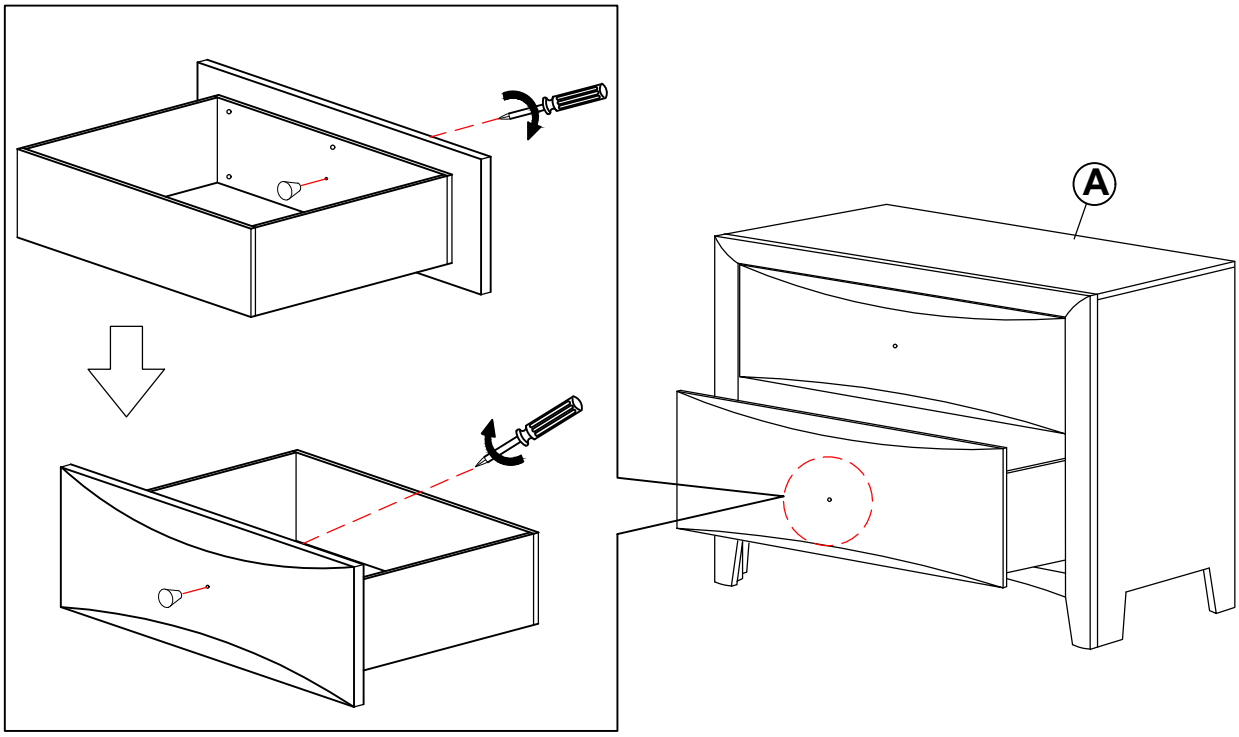

I

ASSEMBLY INSTRUCTIONS

STEP 2

COMPLETE

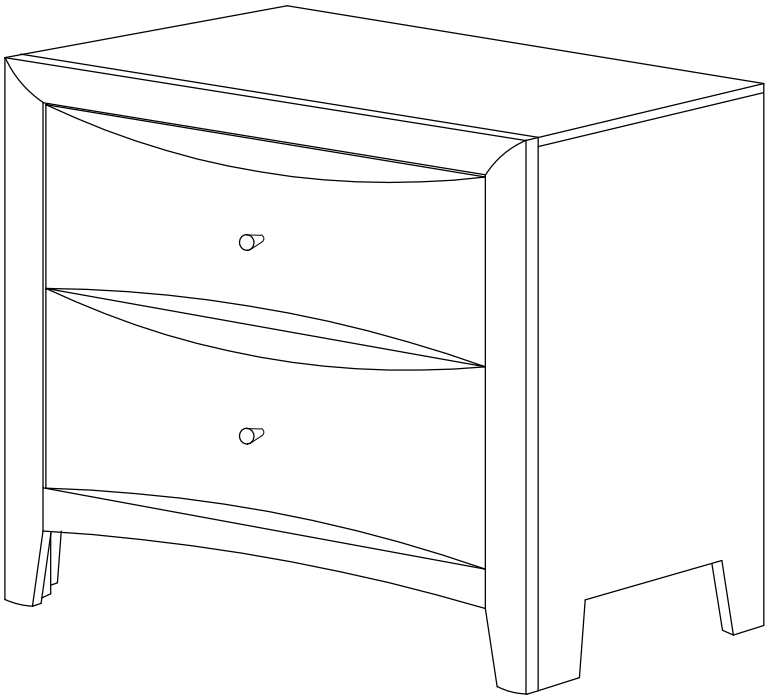

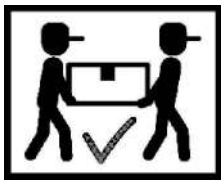

ANTI-TIPPING INSTALLMENT INSTRUCTIONS

FURNITURE TIPPING RESTRAINT

WARNING

Injury may result from tipping furniture.
This restraint may protect against tipping furniture.
Do not allow children to climb on furniture.
This restraint is not a substitute for proper adult supervision.
Failure to detach this restraint before moving the furniture may result in injury and damage.

This tip restraint must be attached to a wall stud using long screw enclosed.

STEP 1

Attach a bracket securely to the back top rail of the furniture using short screw provided, through the smaller hole.

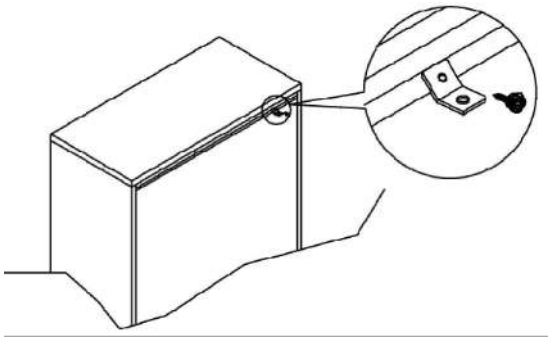

STEP 2

Locate the other bracket on the wall over a wall stud and two inches below the mounting bracket secured to the back of furniture. Attach the wall stud using the long screw provided, through the smaller hole.

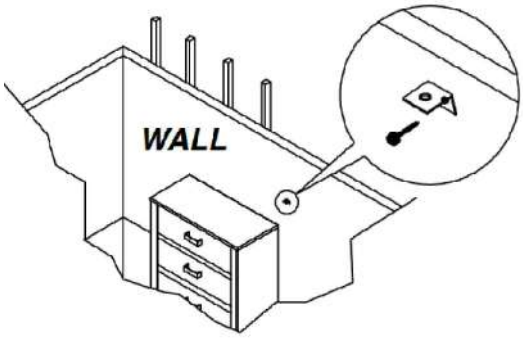

STEP 3

Place the furniture into position so both mounting brackets are vertically in line. Lace the end of the restraint strap through the large hole in each mounting bracket. Bring both ends together and slide the flat end through the locking end and draw it through until all slack is removed.
Confirm that the strap is securely laced and locked.

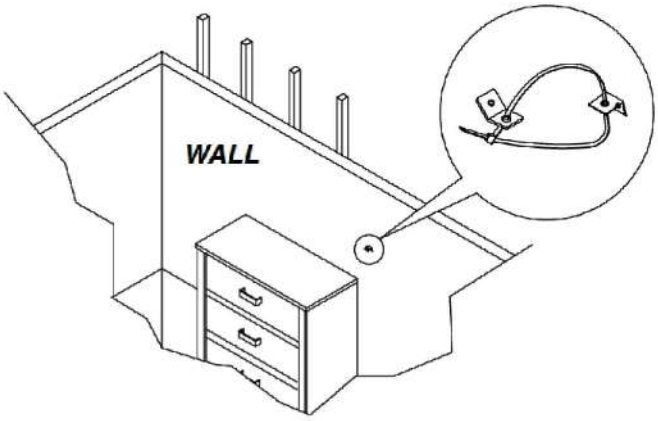

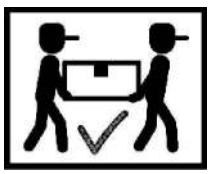

INNER SIZE OF DRAWER A : 5.7" x 14.3" x 21.8"

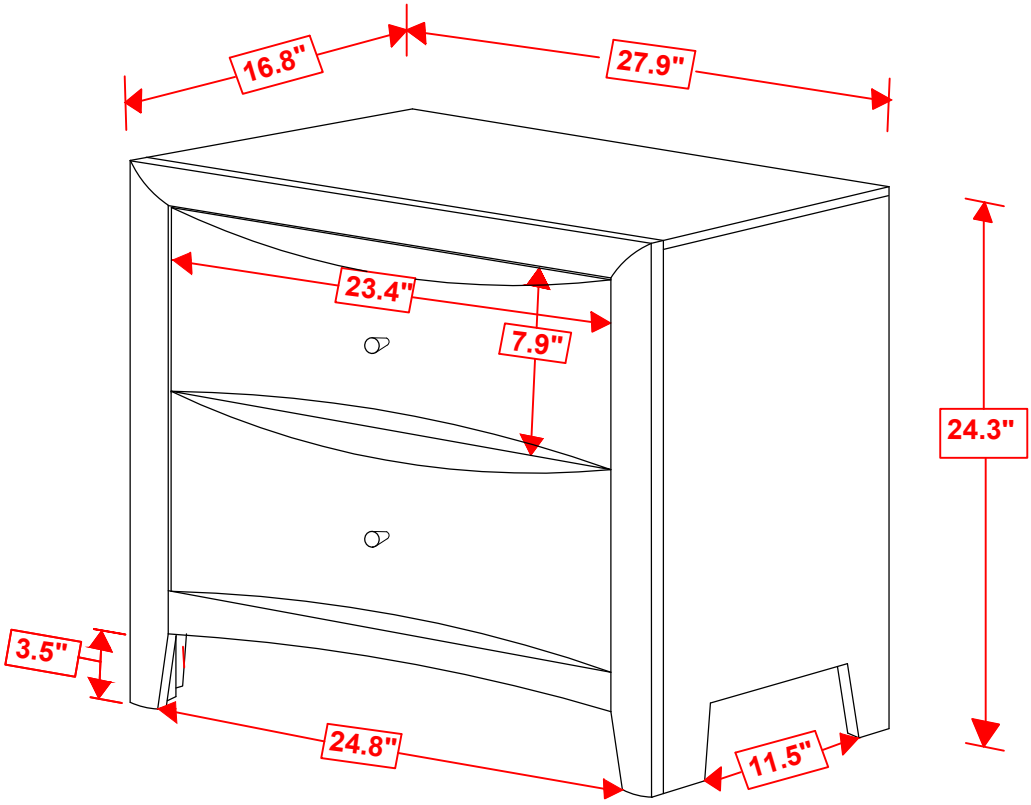

NOTE : DIMENSION TOLERANCE ± 5%

ASSEMBLY INSTRUCTIONS

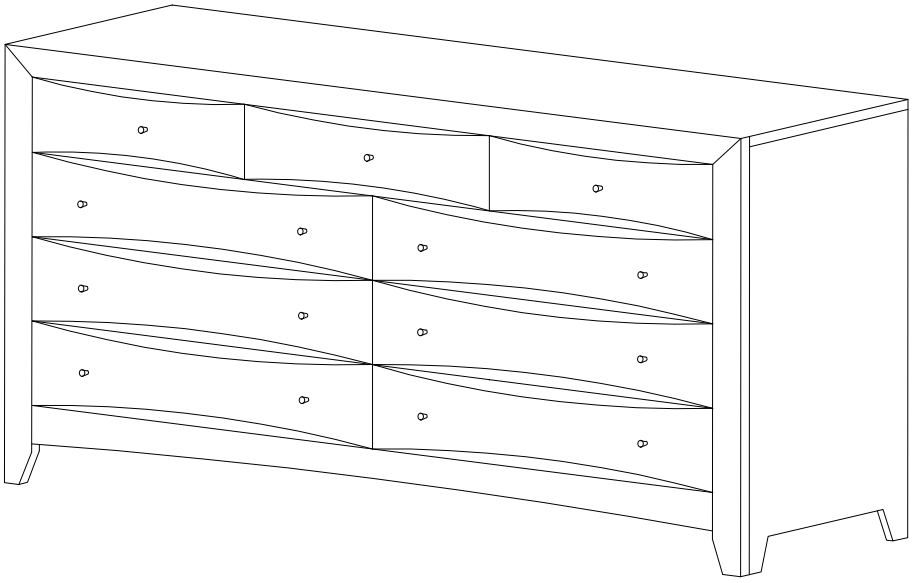

Dresser

ASSEMBLY INSTRUCTIONS

ASSEMBLY TIPS:

1. Remove hardware from box and sort by size.
2. Please check to see that all hardware and parts are present prior to start of assembly.
3. Please follow attached instructions in the same sequence as numbered to assure fast & easy assembly.

WARNING!

1. Don't attempt to repair or modify parts that are broken or defective. Please contact the store immediately.
2. This product is for home use only and not intended for commercial establishments.

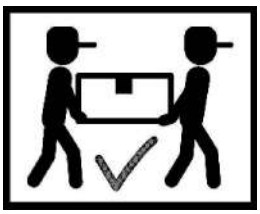

ASSEMBLY TIME	10 MINUTES

PARTS IDENTIFICATION

A	**DRESSER**	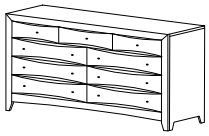	**1PC**

NOTE:

Phillips head screw driver is required in the assembly process; however, manufacturer does not provide this item.

ASSEMBLY INSTRUCTIONS

STEP 1

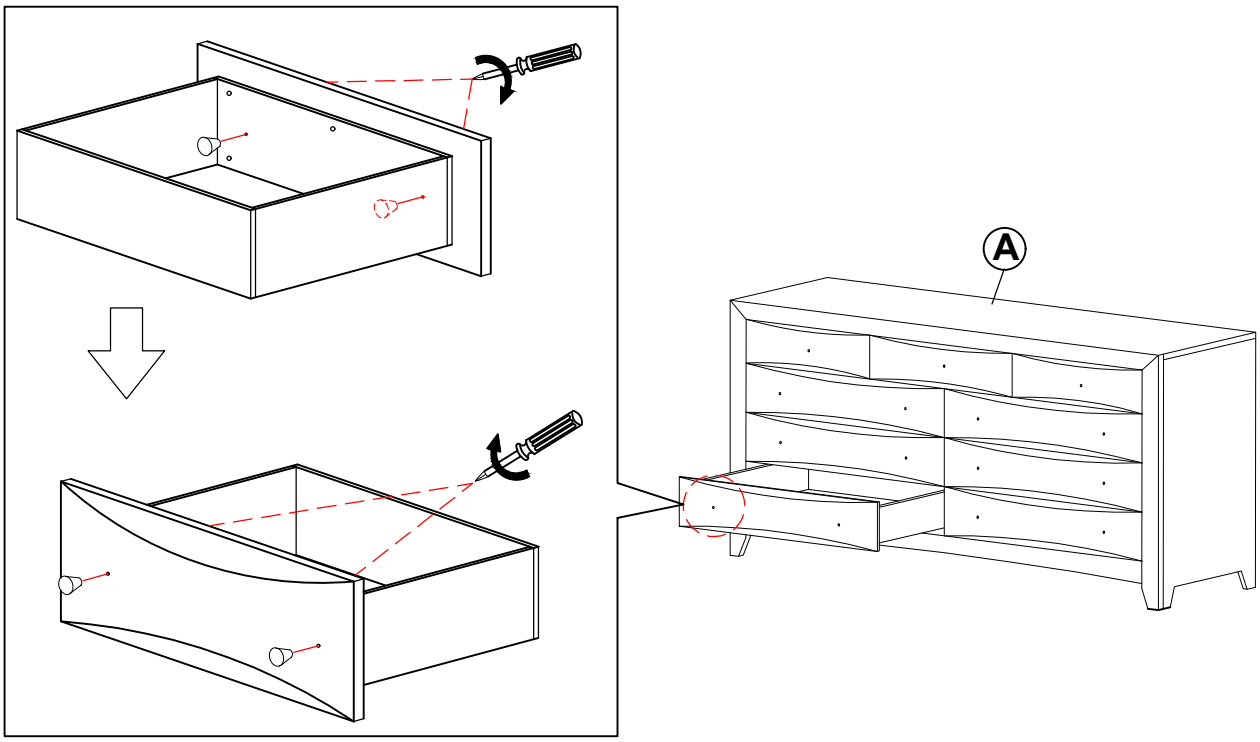

ASSEMBLY INSTRUCTIONS

STEP 2

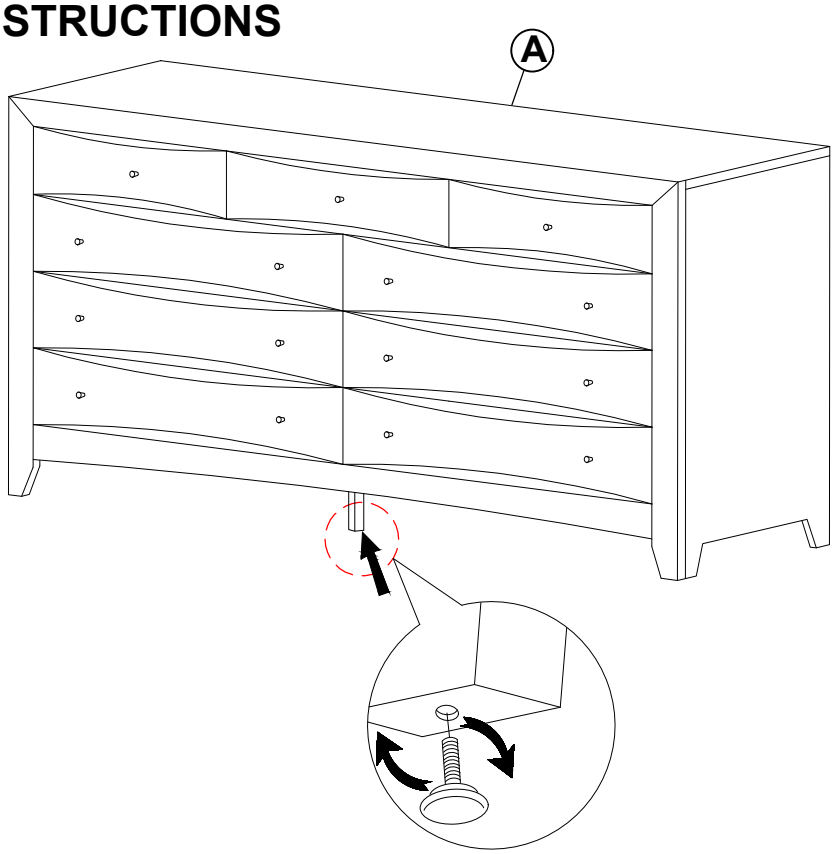

STEP 3

COMPLETE

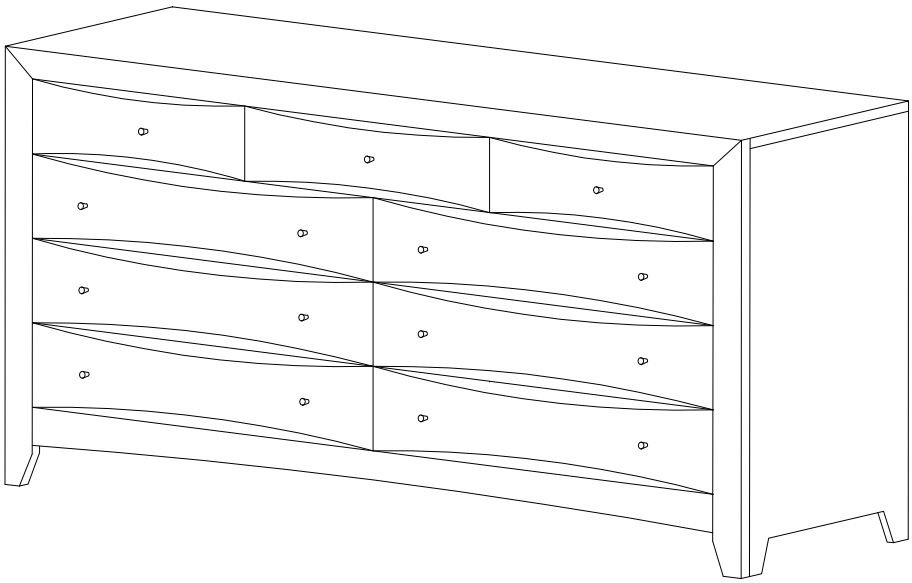

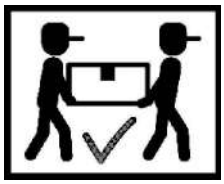

ANTI-TIPPING INSTALLMENT INSTRUCTIONS

FURNITURE TIPPING RESTRAINT

WARNING

Injury may result from tipping furniture.
This restraint may protect against tipping furniture.
Do not allow children to climb on furniture.
This restraint is not a substitute for proper adult supervision.
Failure to detach this restraint before moving the furniture may result in injury and damage.

This tip restraint must be attached to a wall stud using long screw enclosed.

STEP 1

Attach a bracket securely to the back top rail of the furniture using short screw provided, through the smaller hole.

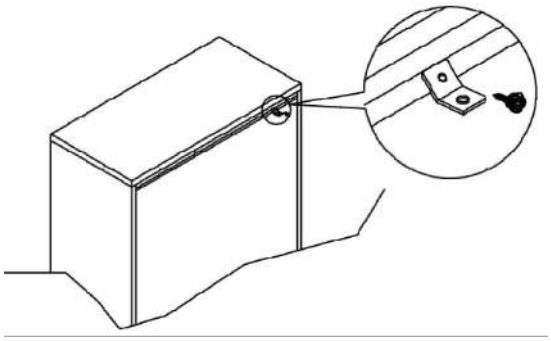

STEP 2

Locate the other bracket on the wall over a wall stud and two inches below the mounting bracket secured to the back of furniture. Attach the wall stud using the long screw provided, through the smaller hole.

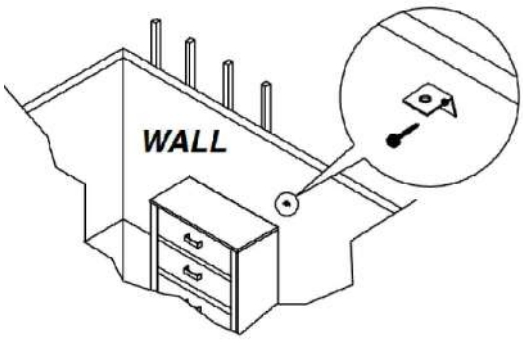

STEP 3

Place the furniture into position so both mounting brackets are vertically in line. Lace the end of the restraint strap through the large hole in each mounting bracket. Bring both ends together and slide the flat end through the locking end and draw it through until all slack is removed.
Confirm that the strap is securely laced and locked.

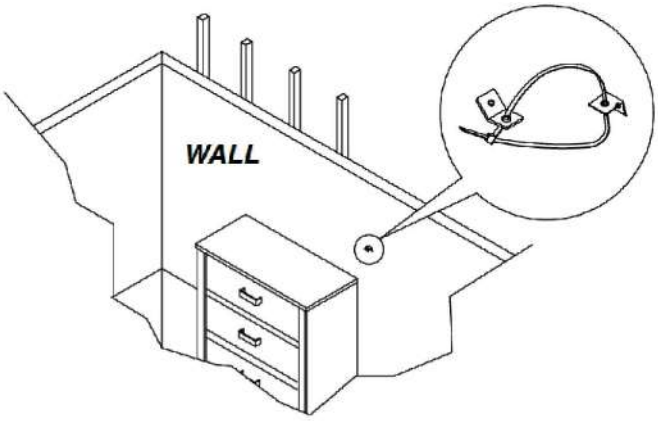

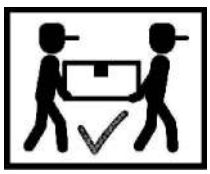

INNER SIZE OF DRAWER A : 4.1" x 14.3" x 16.2"
INNER SIZE OF DRAWER B : 5.7" x 14.3" x 26.1"

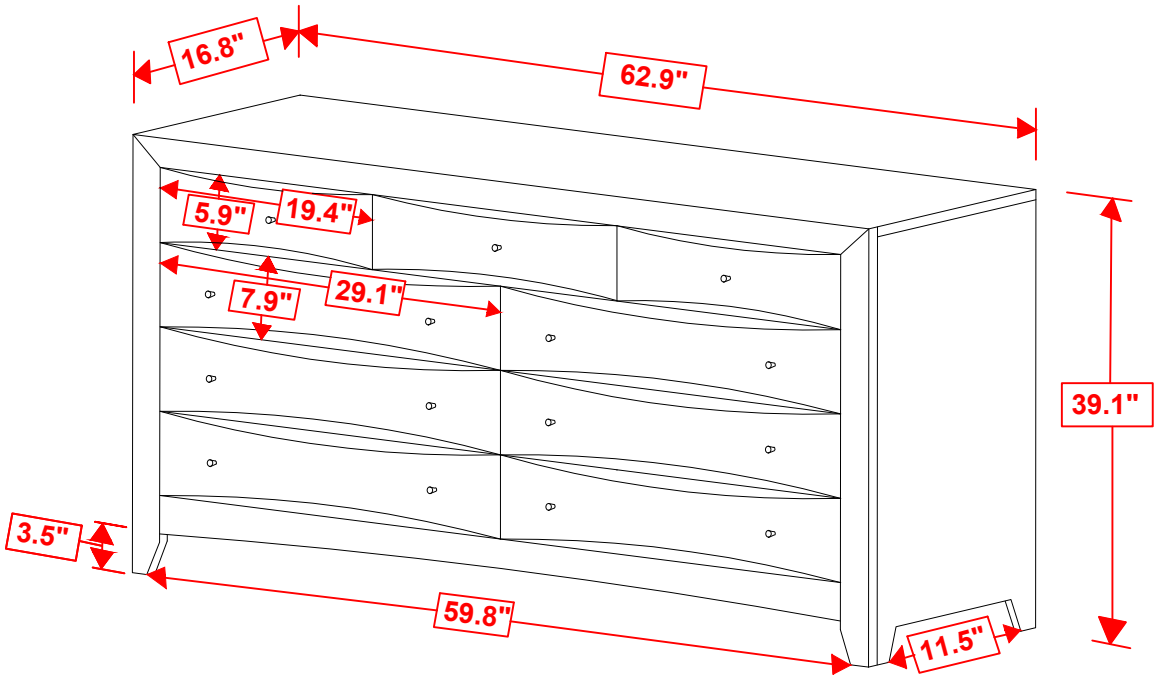

NOTE : DIMENSION TOLERANCE± 5%

ASSEMBLY INSTRUCTIONS

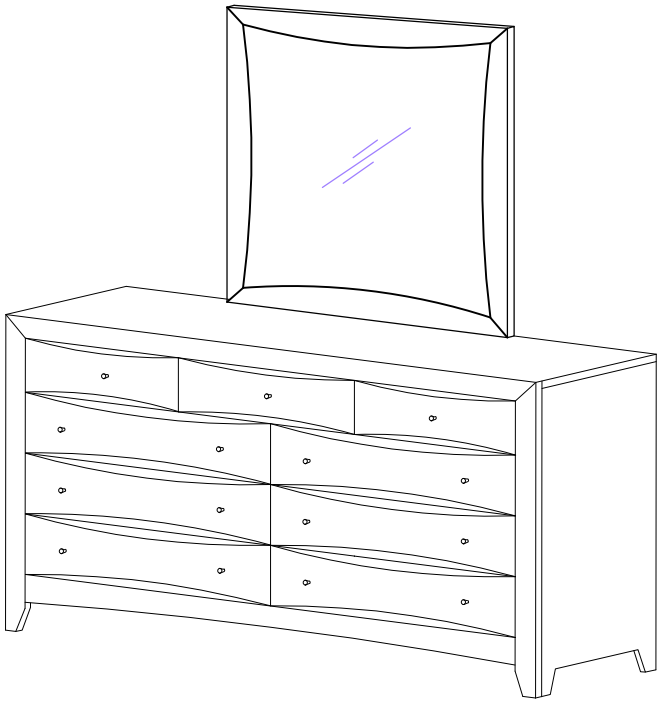

Mirror

ASSEMBLY INSTRUCTIONS

ASSEMBLY TIPS:

1. Remove hardware from box and sort by size.
2. Please check to see that all hardware and parts are present prior to start of assembly.
3. Please follow attached instructions in the same sequence as numbered to assure fast & easy assembly.

WARNING!

1. Don't attempt to repair or modify parts that are broken or defective. Please contact the store immediately.
2. This product is for home use only and not intended for commercial establishments.

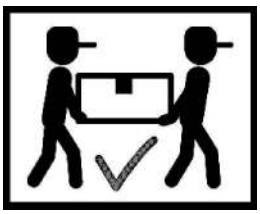

ASSEMBLY TIME	10 MINUTES

PARTS IDENTIFICATION

A	MIRROR	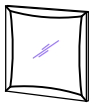	1PC
B	DRESSER *FROM BOX ITEM #200413	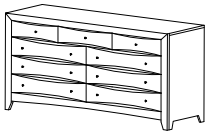	1PC
C	MIRROR SUPPORT (PACKED WITH DRESSER)		2PCS

HARDWARE IDENTIFICATION

1	FLAT HEAD SCREW (M4 x 32mm - BLK)		8PCS

NOTE:

Phillips head screw driver is required in the assembly process; however, manufacturer does not provide this item.

ASSEMBLY INSTRUCTIONS

STEP 1

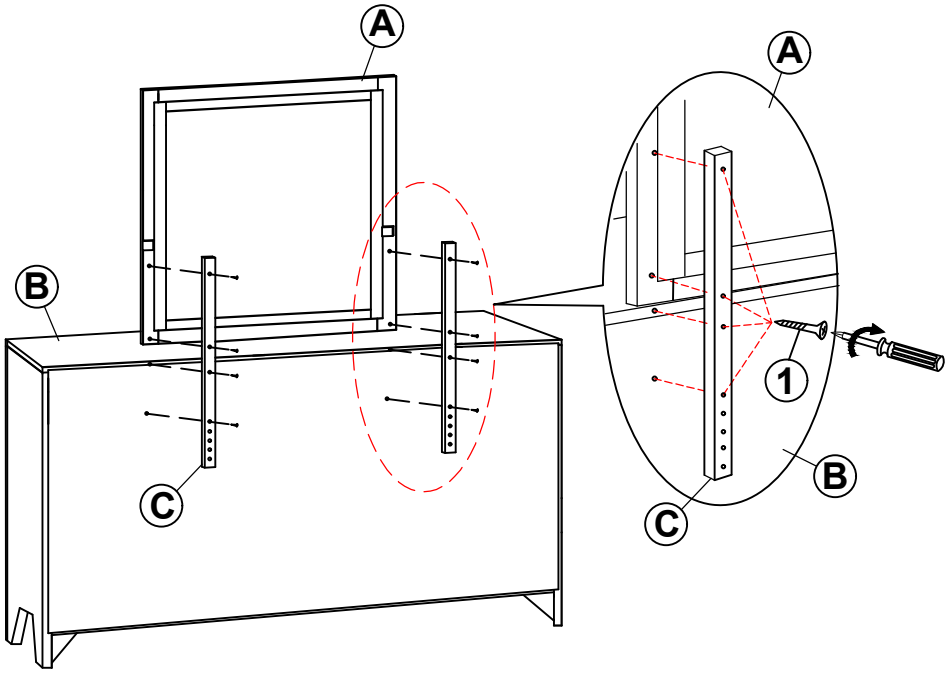

STEP 2

COMPLETE

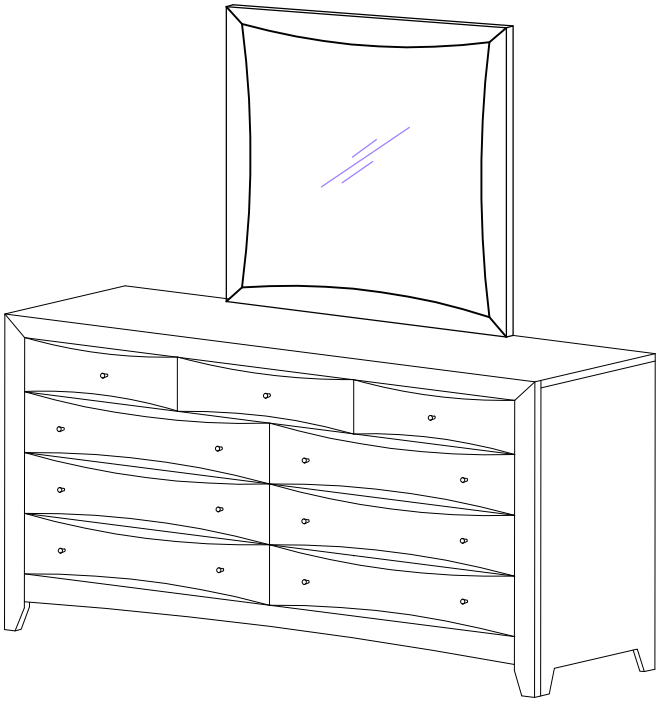

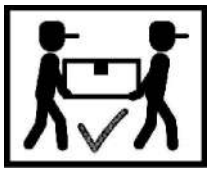

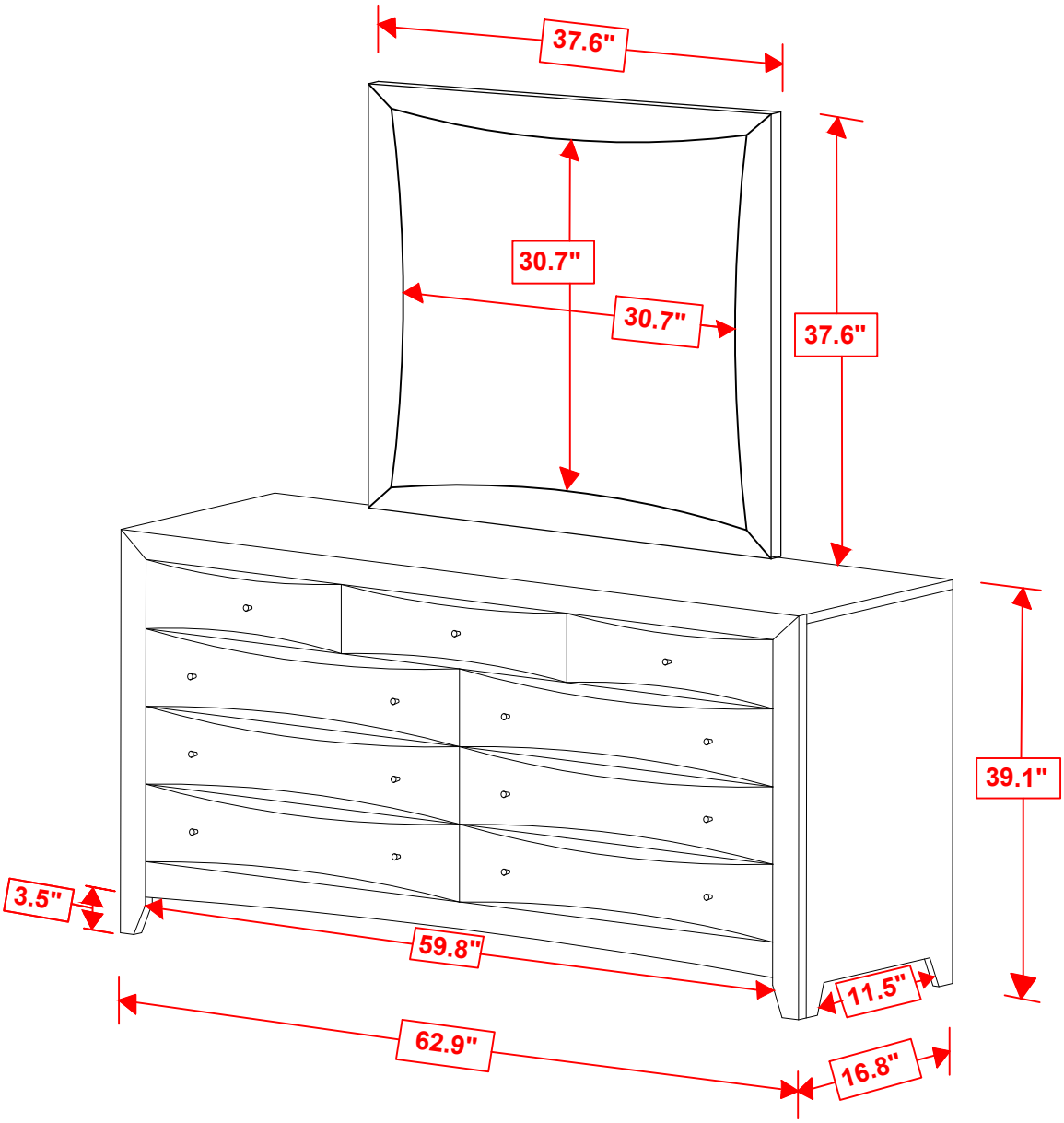

NOTE : DIMENSION TOLERANCE± 5%

ASSEMBLY INSTRUCTIONS

Chest

ASSEMBLY INSTRUCTIONS

ASSEMBLY TIPS:

1. Remove hardware from box and sort by size.
2. Please check to see that all hardware and parts are present prior to start of assembly.
3. Please follow attached instructions in the same sequence as numbered to assure fast & easy assembly.

WARNING!

1. Don't attempt to repair or modify parts that are broken or defective. Please contact the store immediately.
2. This product is for home use only and not intended for commercial establishments.

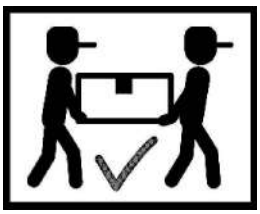

ASSEMBLY TIME	10 MINUTES

PARTS IDENTIFICATION

A	CHEST		1PC

NOTE:

Phillips head screw driver is required in the assembly process; however, manufacturer does not provide this item.

ASSEMBLY INSTRUCTIONS
STEP 1

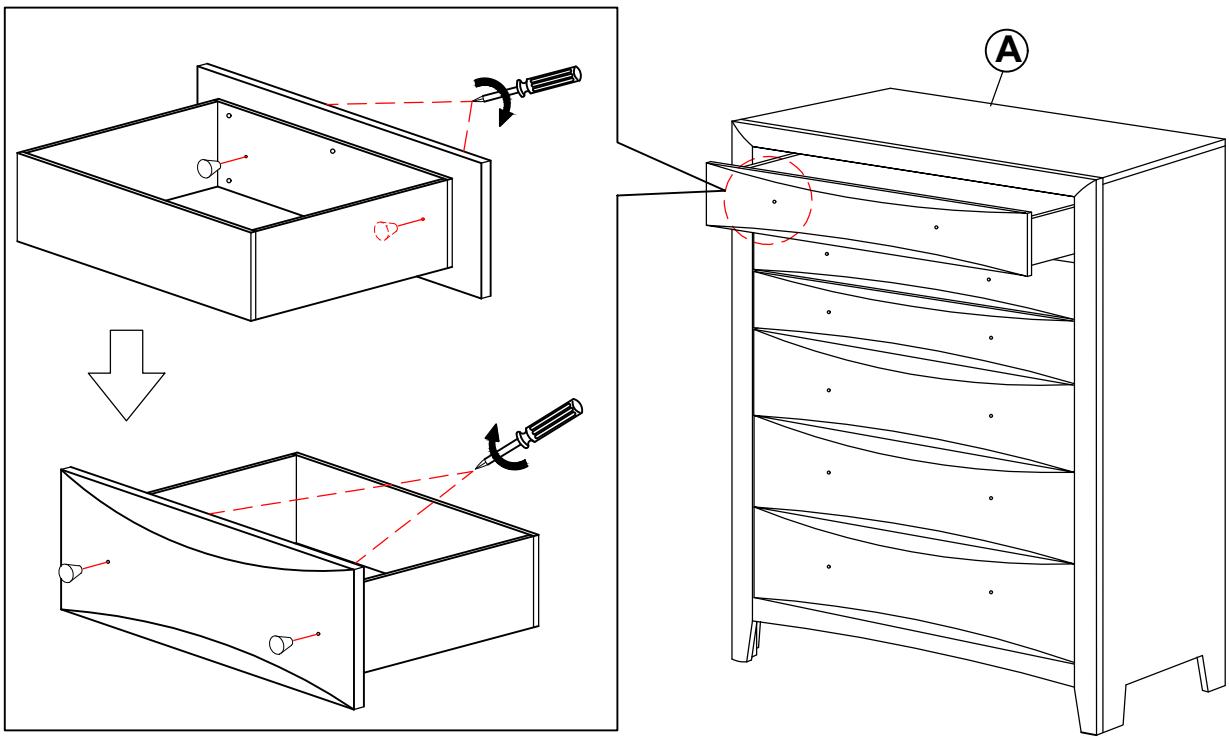

ASSEMBLY INSTRUCTIONS

STEP 2

COMPLETE

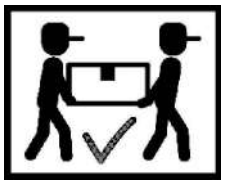

ANTI-TIPPING INSTALLMENT INSTRUCTIONS

FURNITURE TIPPING RESTRAINT

WARNING

Injury may result from tipping furniture.
This restraint may protect against tipping furniture.
Do not allow children to climb on furniture.
This restraint is not a substitute for proper adult supervision.
Failure to detach this restraint before moving the furniture may result in injury and damage.

This tip restraint must be attached to a wall stud using long screw enclosed.

STEP 1

Attach a bracket securely to the back top rail of the furniture using short screw provided, through the smaller hole.

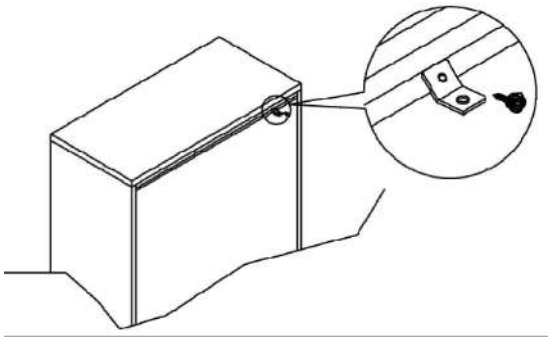

STEP 2

Locate the other bracket on the wall over a wall stud and two inches below the mounting bracket secured to the back of furniture. Attach the wall stud using the long screw provided, through the smaller hole.

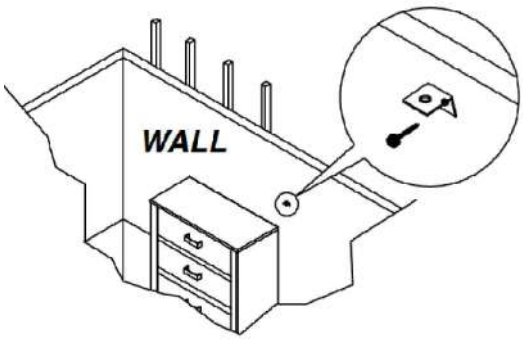

STEP 3

Place the furniture into position so both mounting brackets are vertically in line. Lace the end of the restraint strap through the large hole in each mounting bracket. Bring both ends together and slide the flat end through the locking end and draw it through until all slack is removed.
Confirm that the strap is securely laced and locked.

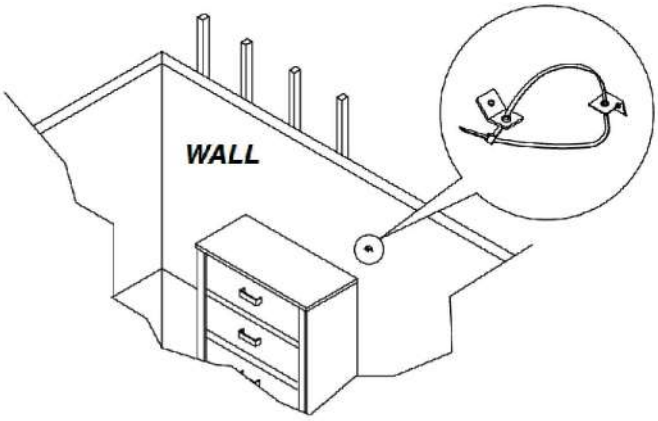

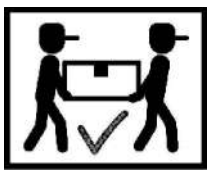

INNER SIZE OF DRAWER A : 2.9" x 14.3" x 29.6"
INNER SIZE OF DRAWER B : 5.7" x 14.3" x 29.6"

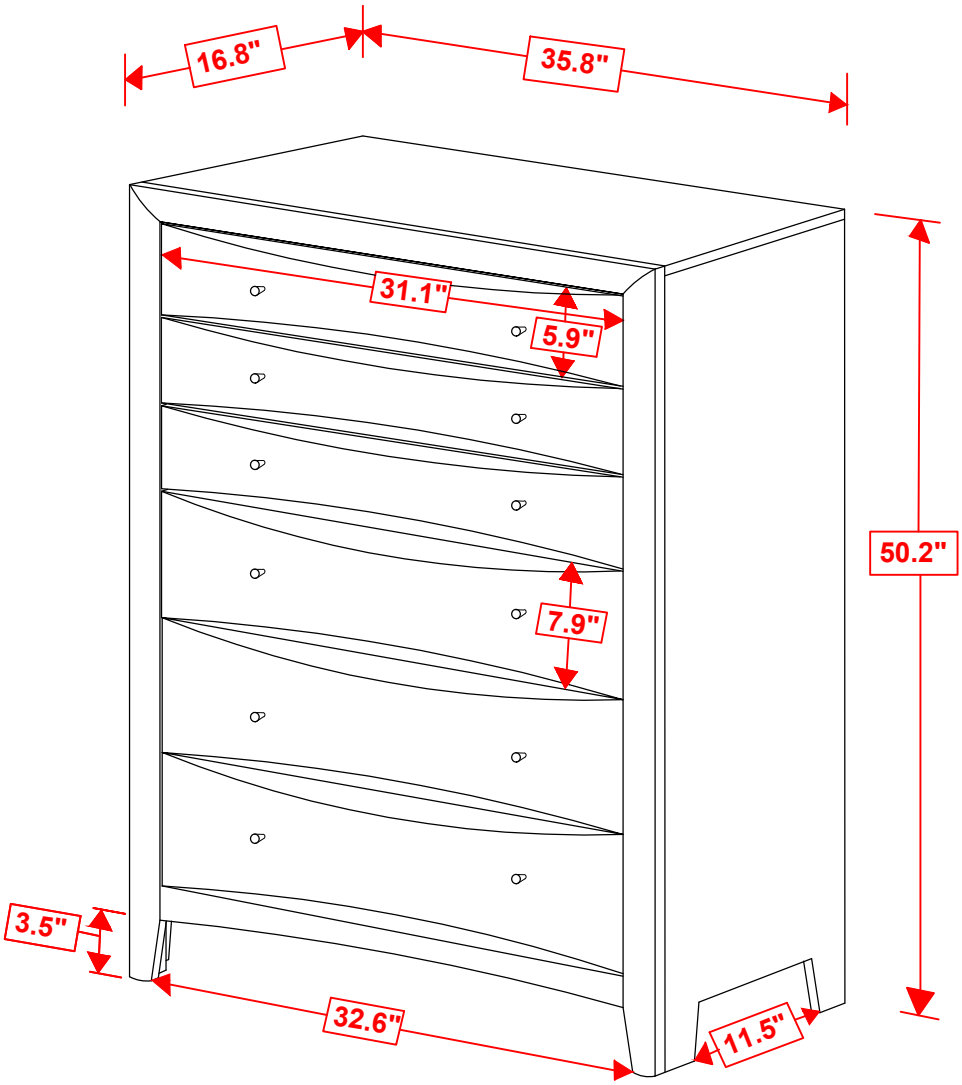

NOTE : DIMENSION TOLERANCE± 5%