ASSEMBLY INSTRUCTIONS

TS26-1377

PF078

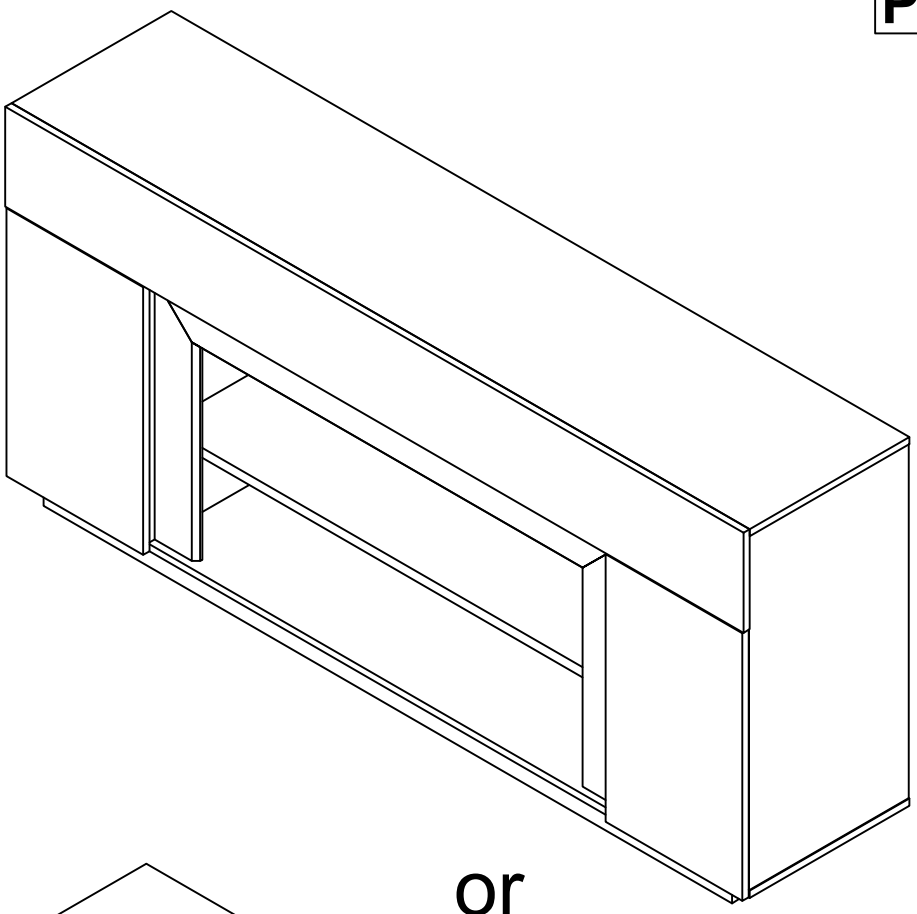

or

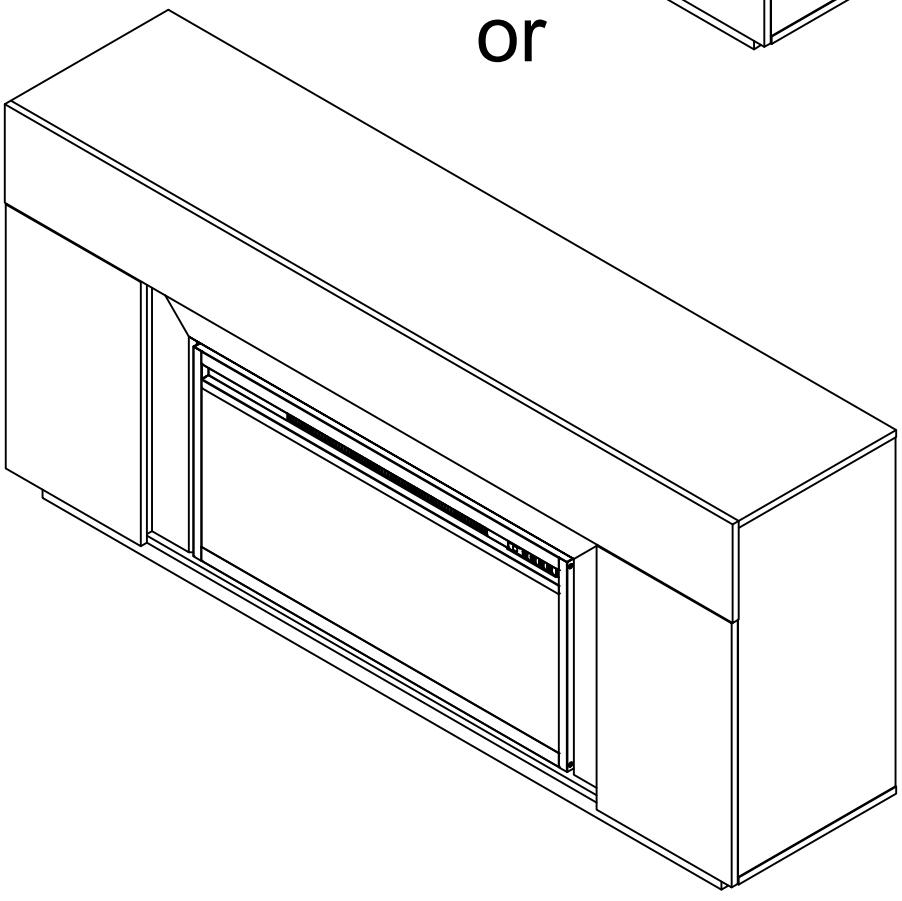

WARNING !

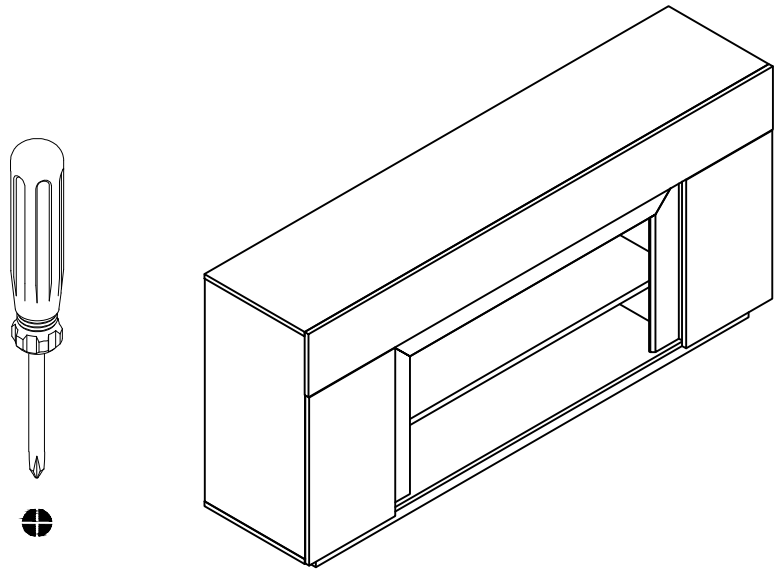

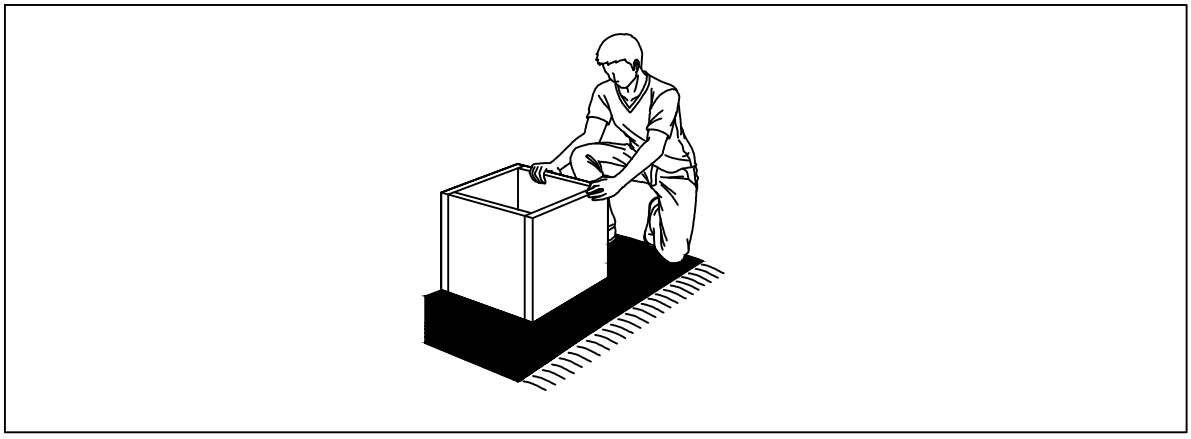

Assembly the furniture on empty carton, carpet, or rug to prevent scratches or damage.

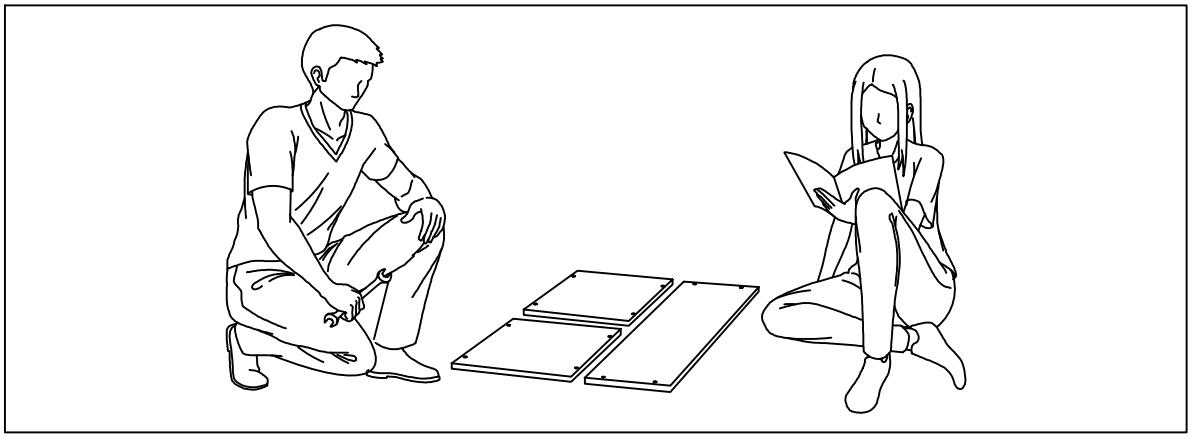

This furniture requires 2 people to assembly.

Make sure no parts are missing or damaged before assembly.

PACKAGE CONTENT

Board Identification

Not actual size

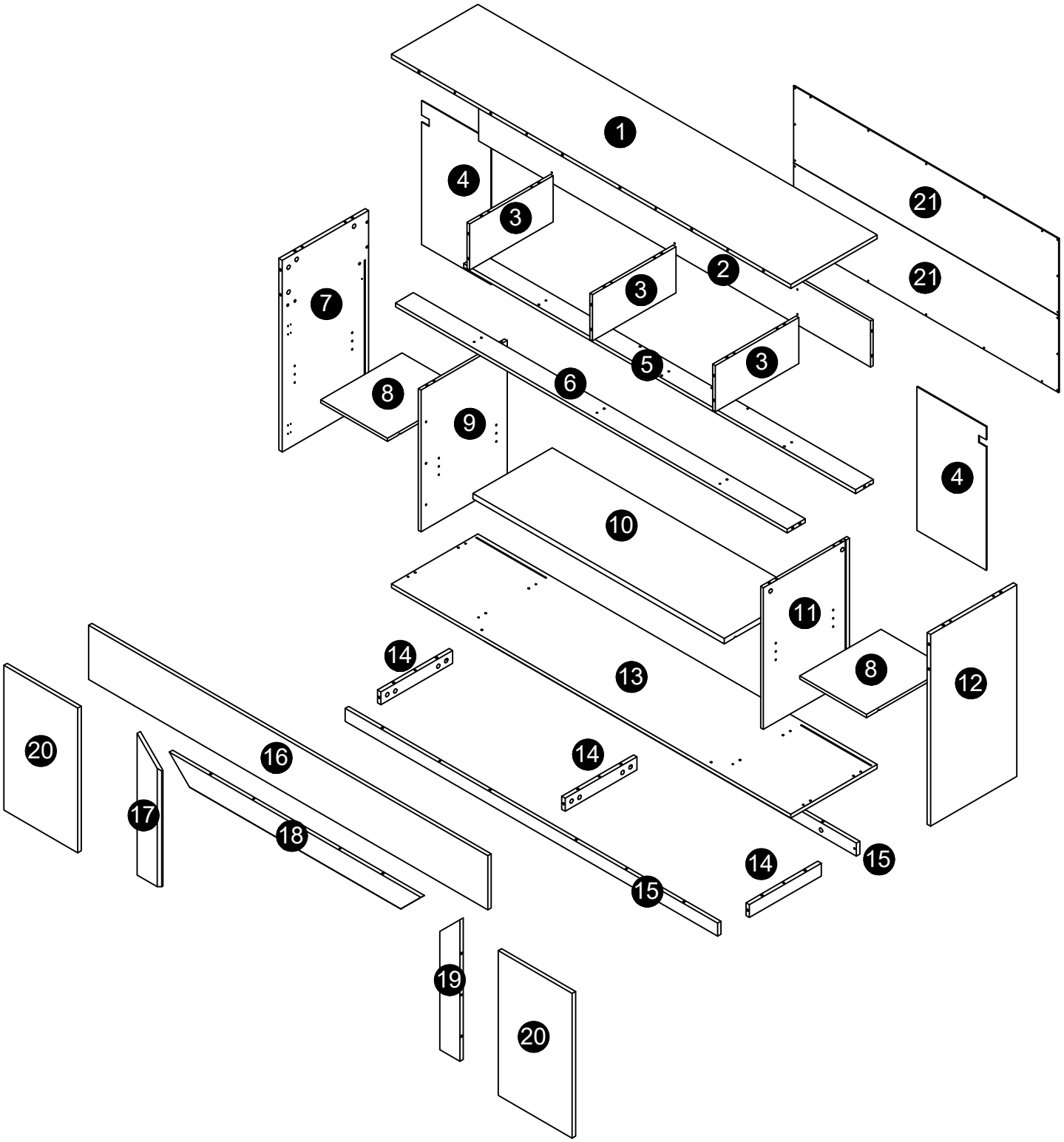

BOARD IDENTIFICATION

Not actual size

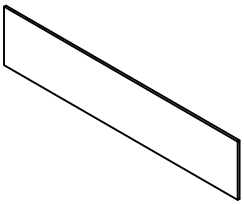

① x1

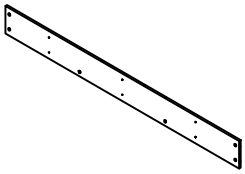

② x1

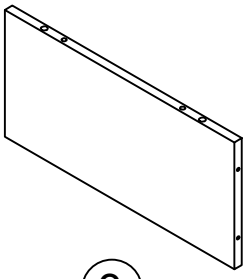

③ x3

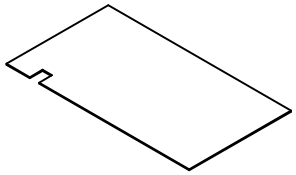

④ x2

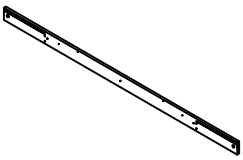

⑤ x1

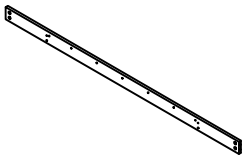

⑥ x1

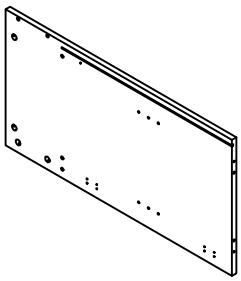

⑦ x1

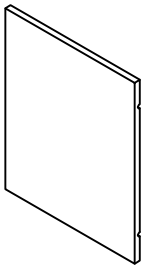

⑧ x2

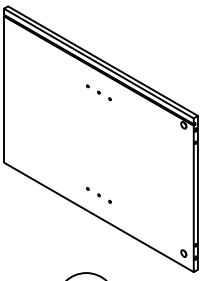

⑨ x1

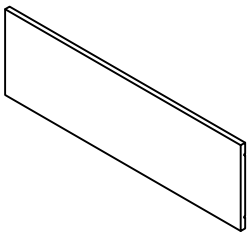

⑩ x1

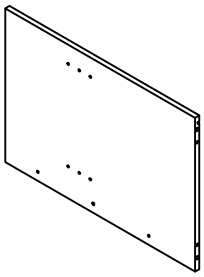

⑪ x1

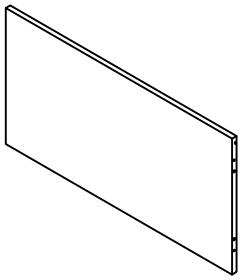

⑫ x1

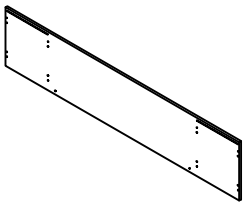

⑬ x1

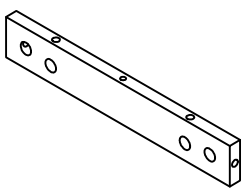

⑭ x3

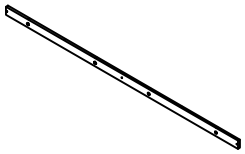

⑮ x2

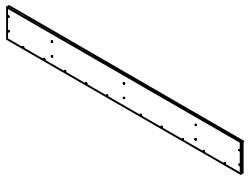

⑯ x1

BOARD IDENTIFICATION

Not actual size

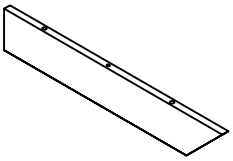

17 x1

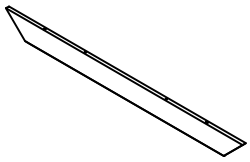

18 x1

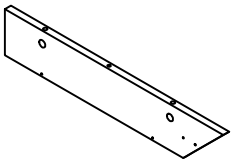

19 x1

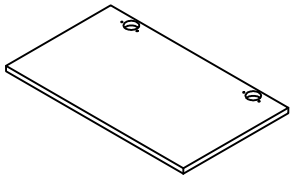

20 x2

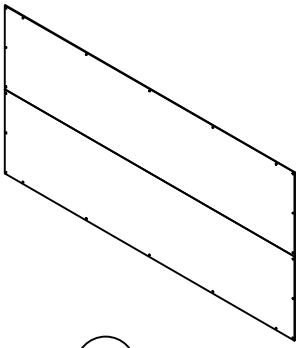

21 x1

HARDWARE LIST



A	x68+2

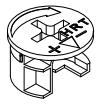

Ø15x9.5

B	x68+2

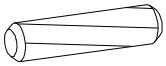

Ø6x30

C	x49+2



Ø5x40

D	x20+1

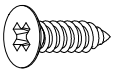

Ø3.5x12

E	x32+2

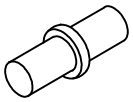

Ø5x16

F	x12+1



Ø20

G	x68+2

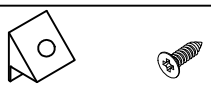

H-1 H-2 Ø3x14mm

H	x16+2

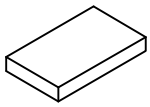

I	x11+2

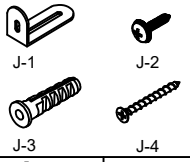

J-1 J-2 J-3 J-4

J	x2

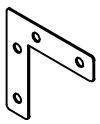

K	x2

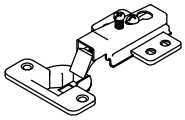

L	x4

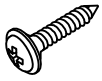

Ø3x14mm

M	x22

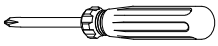

N	x1

Cam Lock Fastening System

Insert the cam bolt into the hole first, then insert the cam lock and lock it.

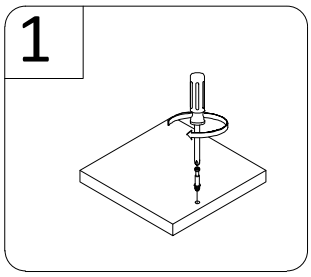

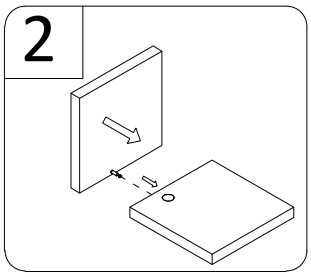

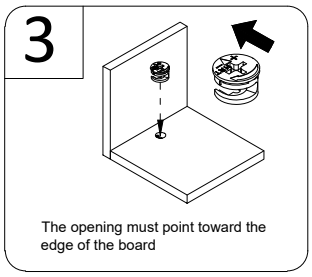

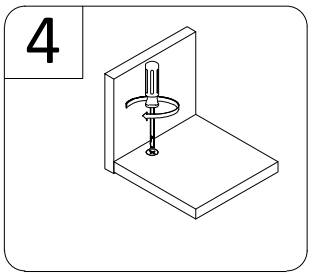

STEP 1

PF078

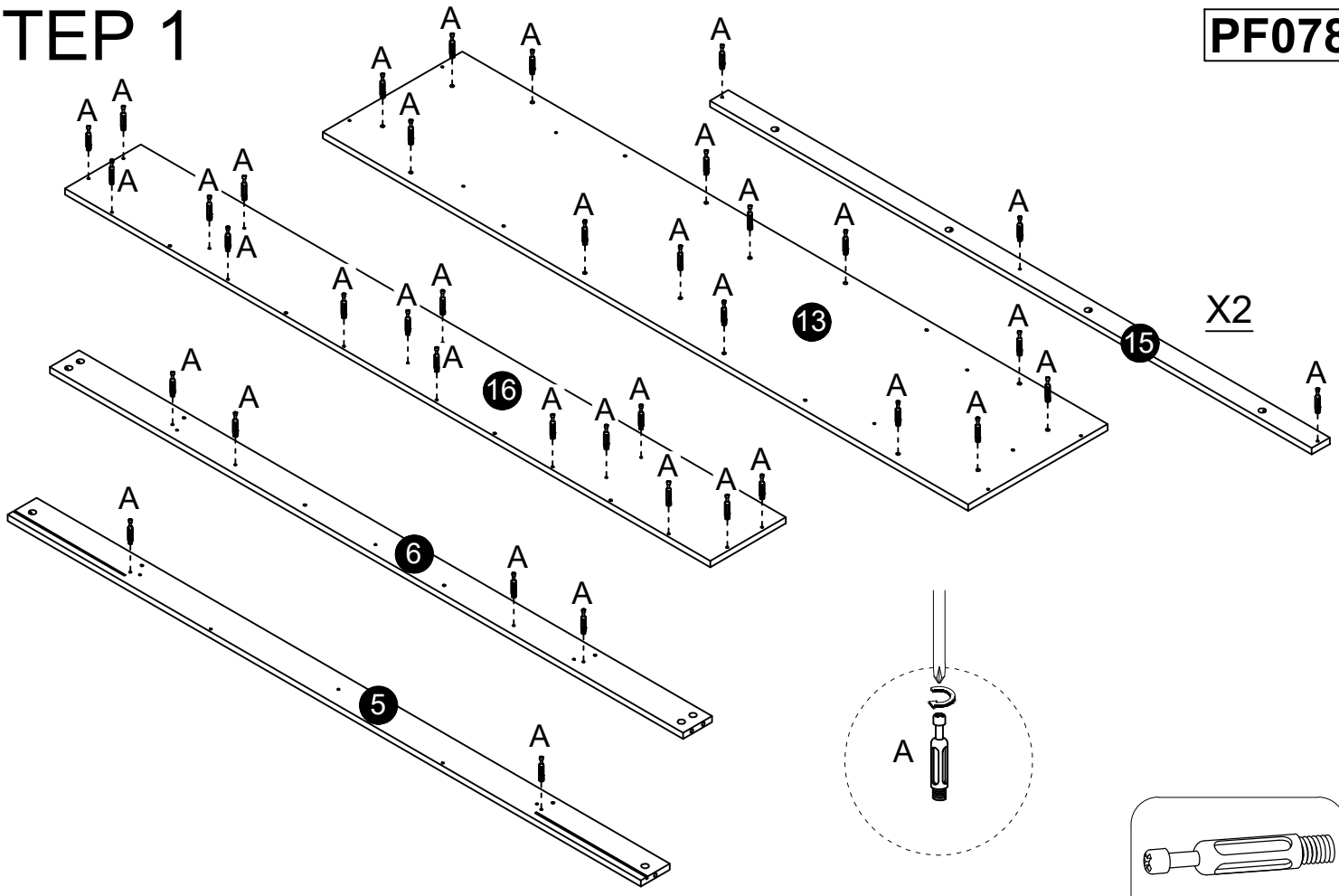

STEP 2

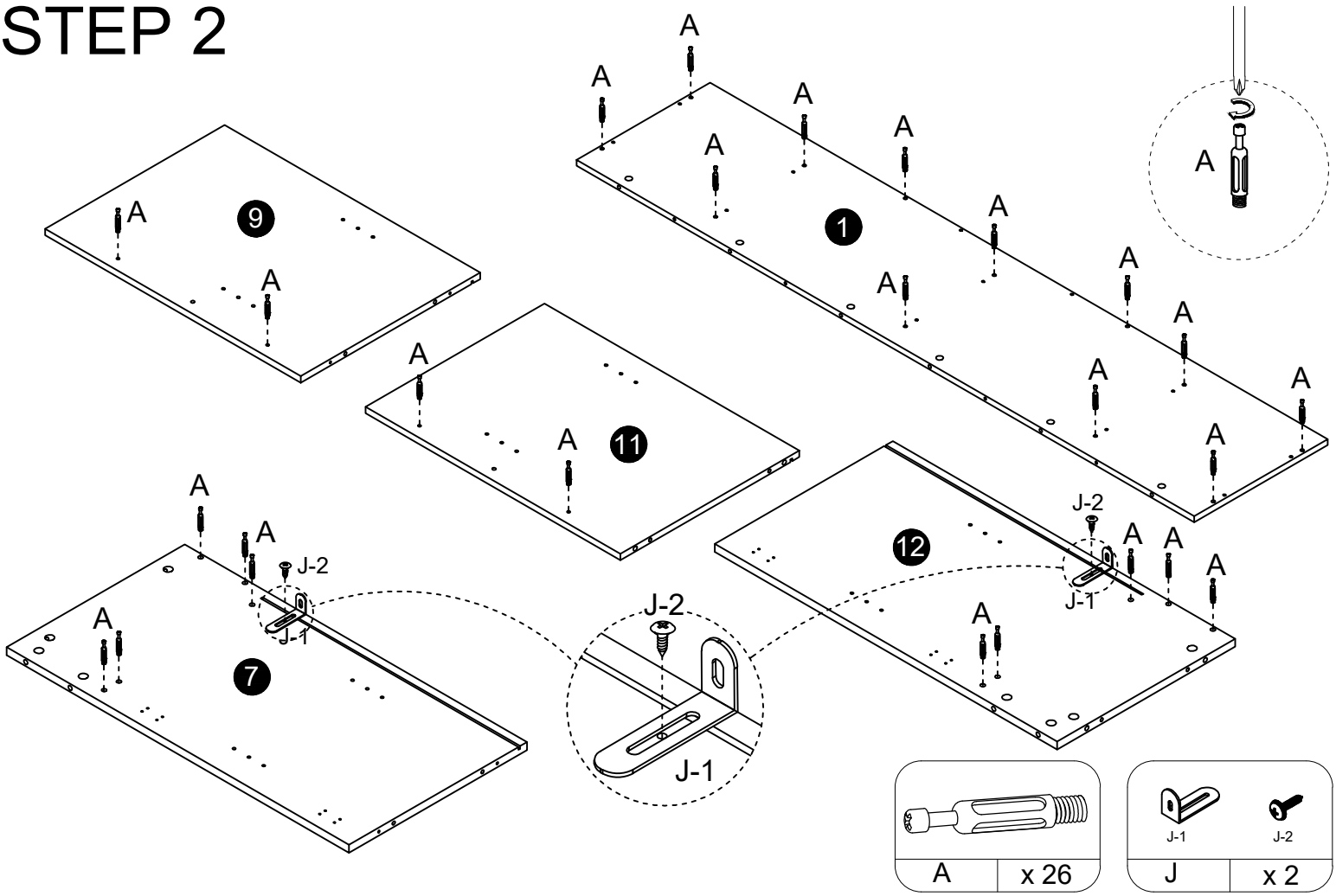

STEP 3

PF078

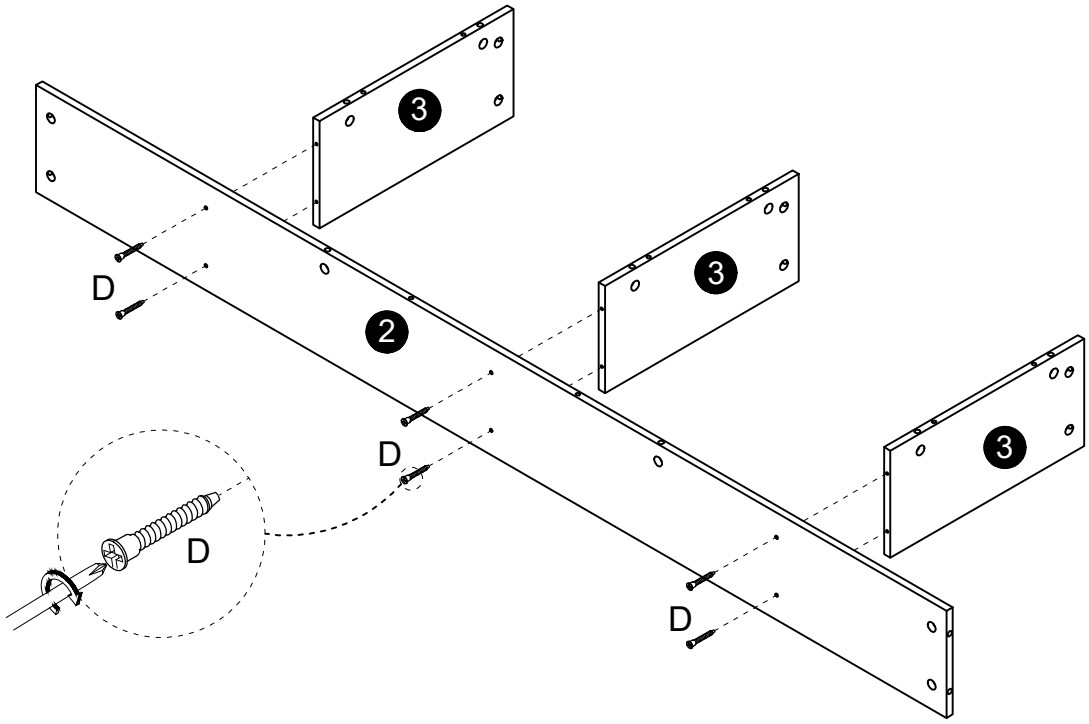

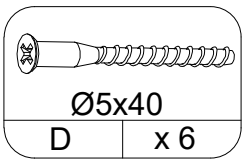

STEP 4

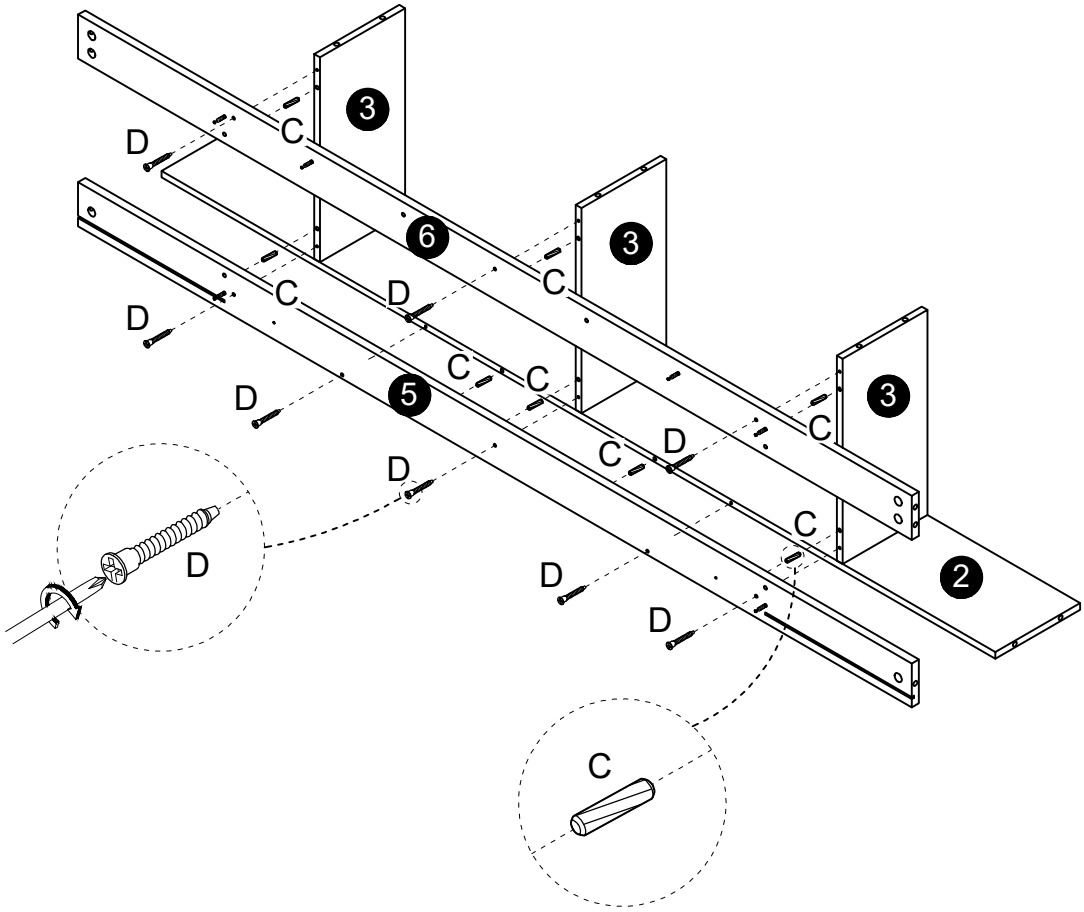

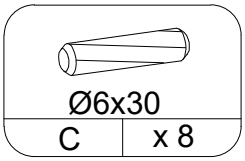

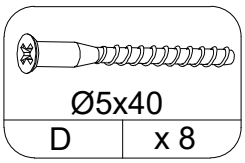

STEP 5

PF078

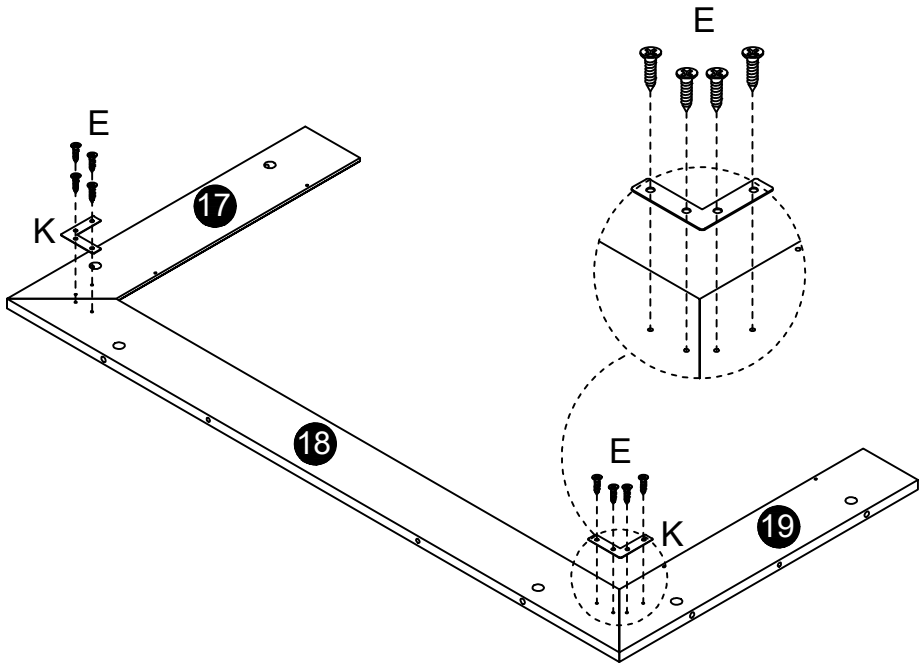

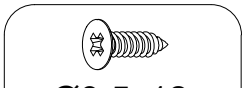

Ø3.5x12	
E	x 8

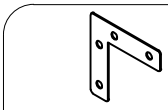

K	x 2

STEP 6

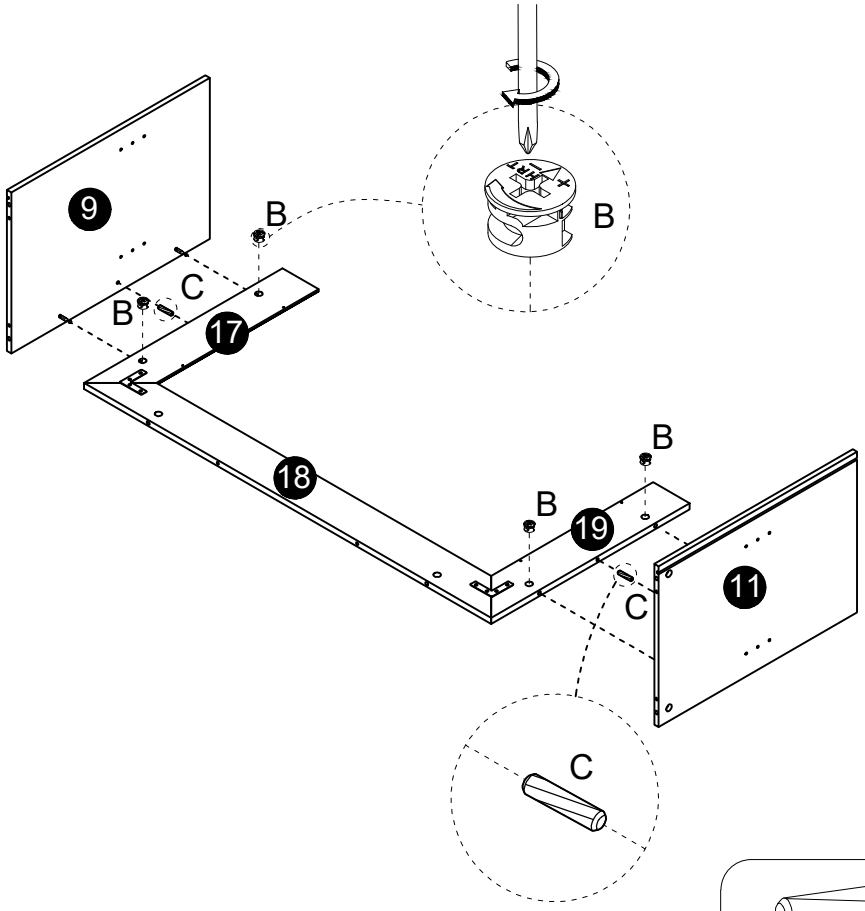

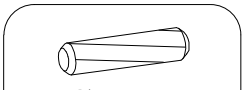

Ø6x30	
C	x 2

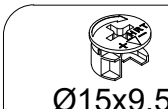

Ø15x9.5	
B	x 4

STEP 7

PF078

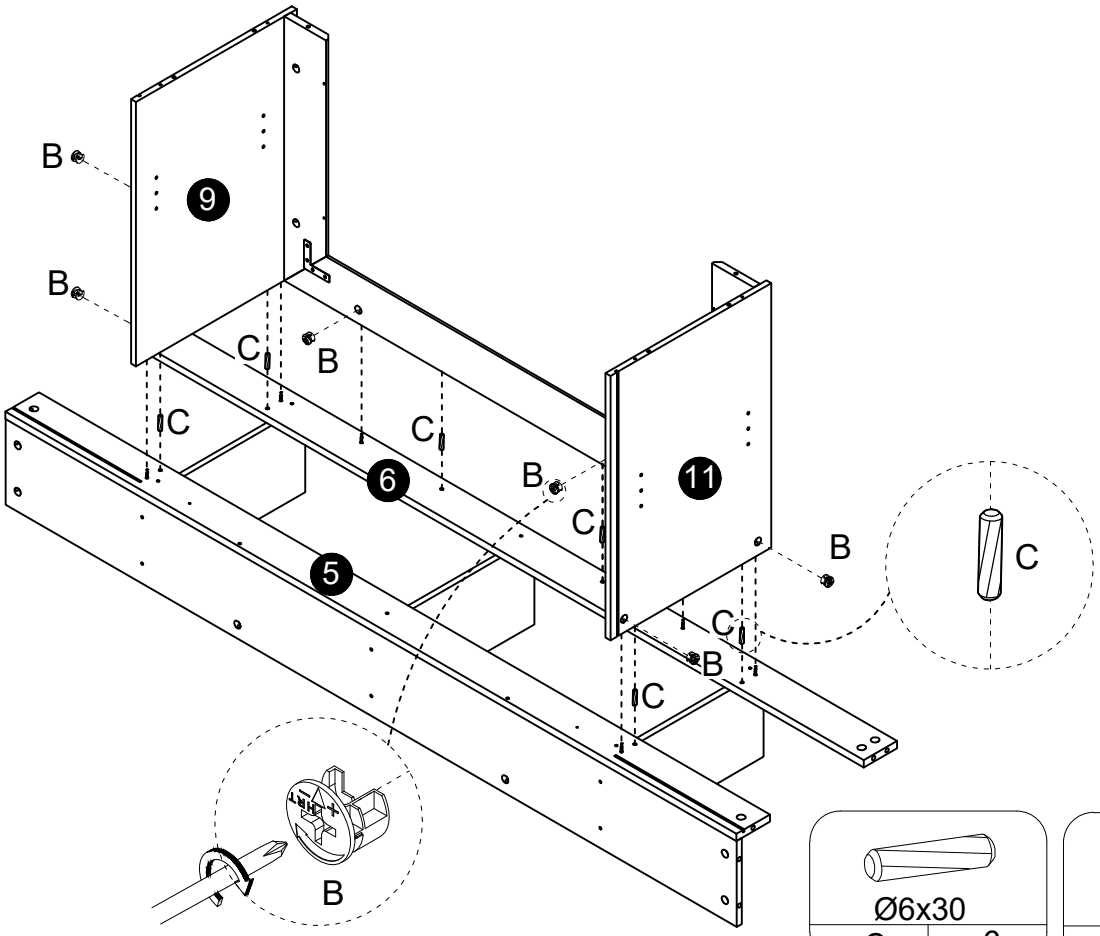

Ø6x30	
C	x 6

Ø15x9.5	
B	x 6

STEP 8

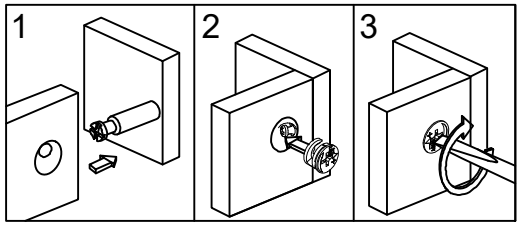

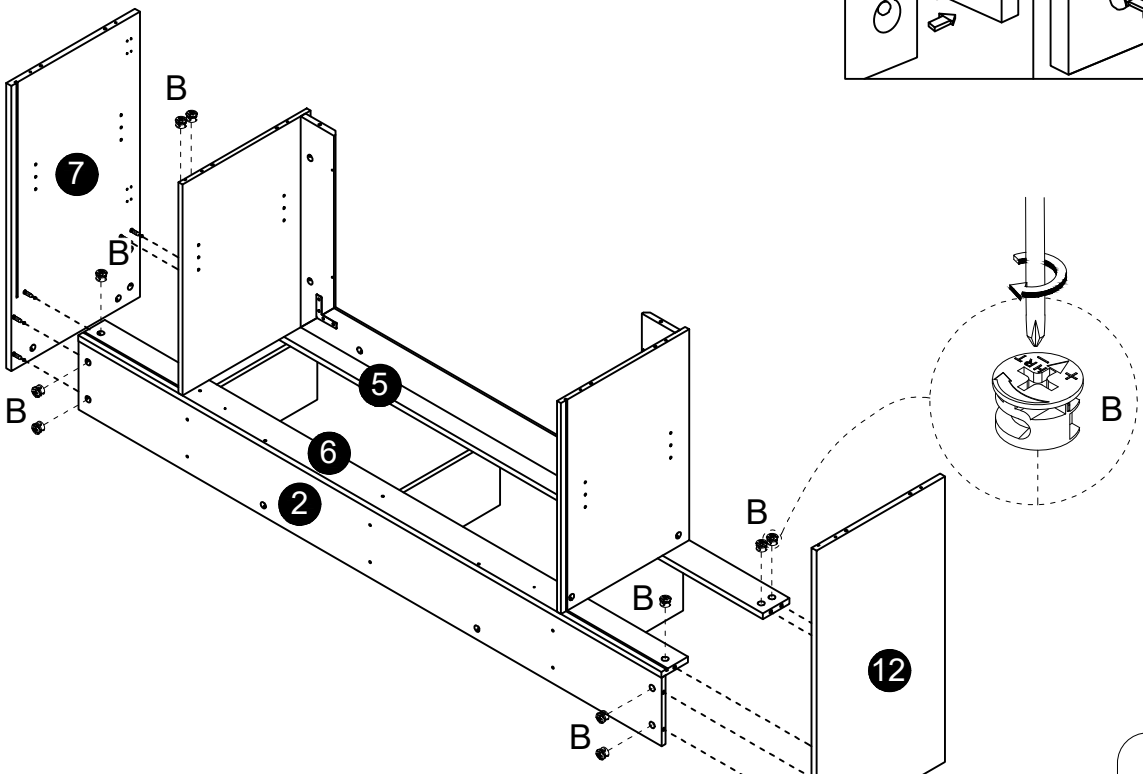

Ø15x9.5	
B	x 10

STEP 9

PF078

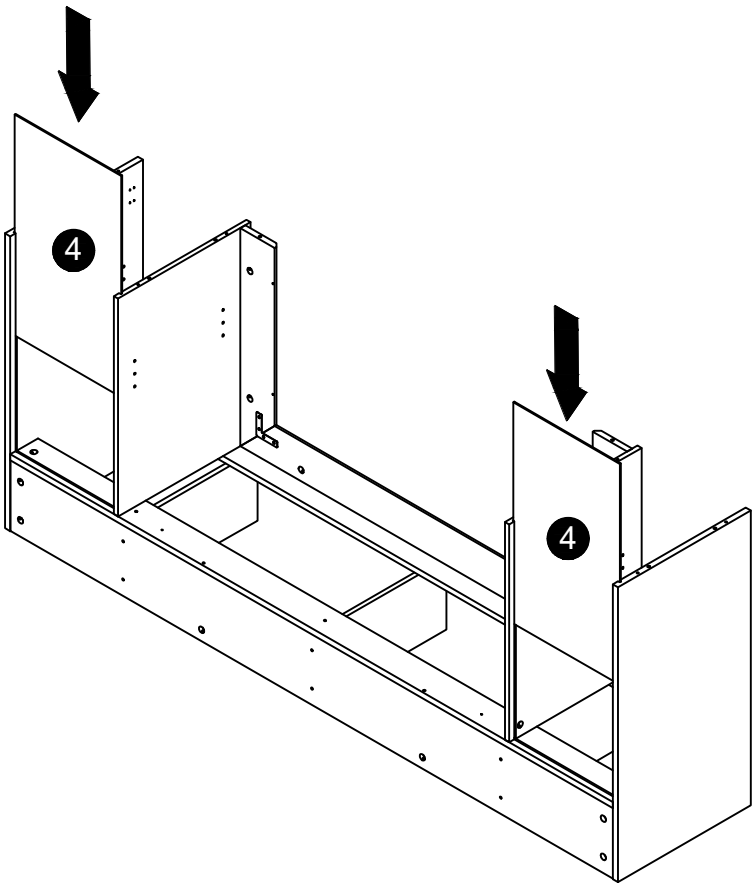

STEP 10

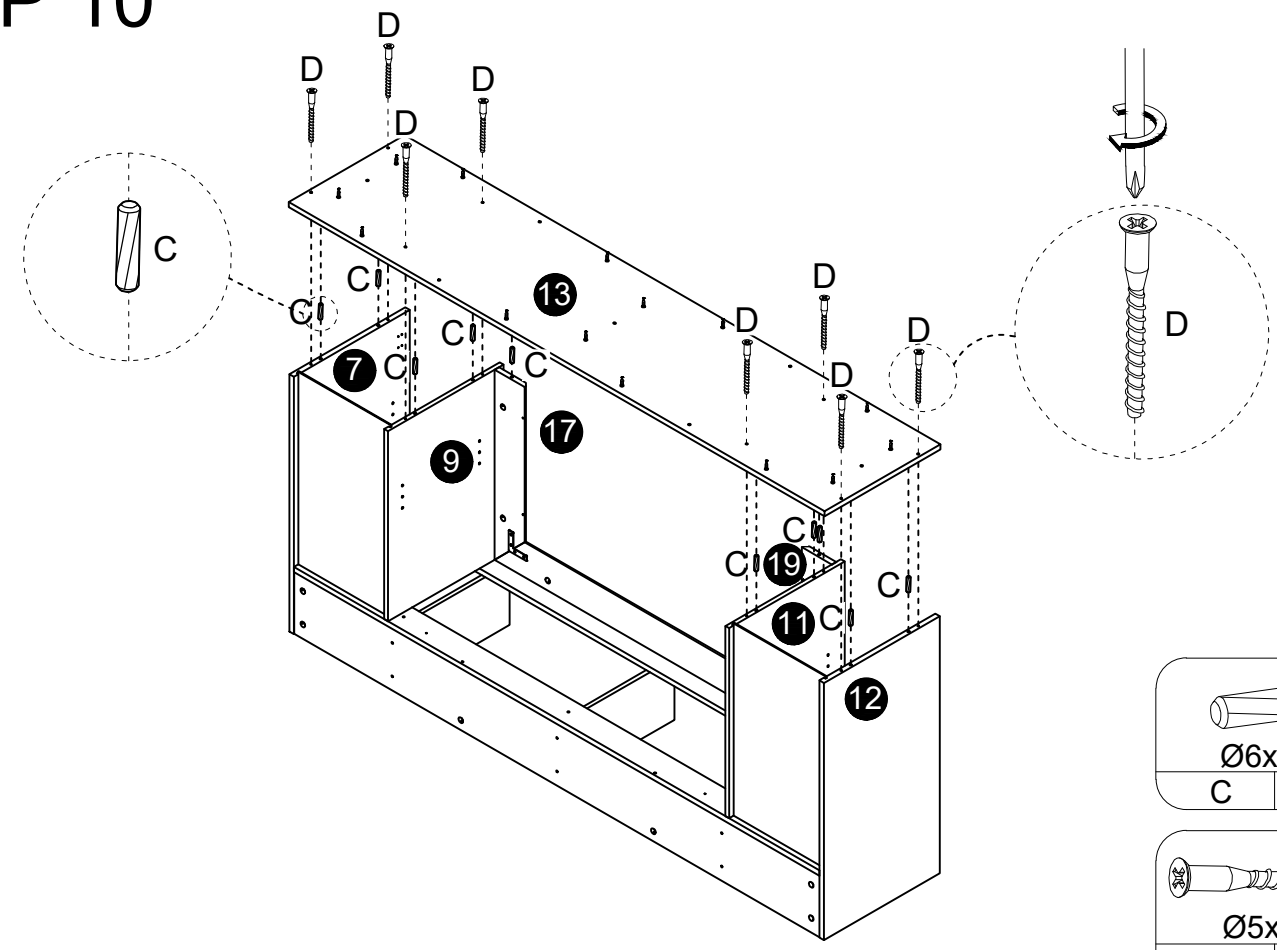

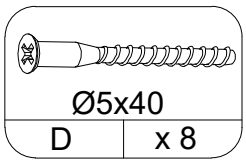

STEP 11

PF078

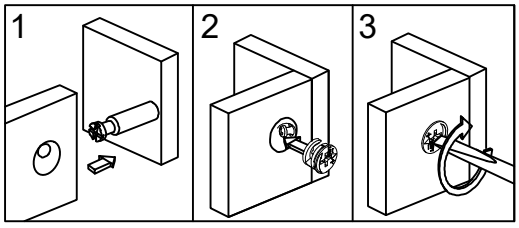

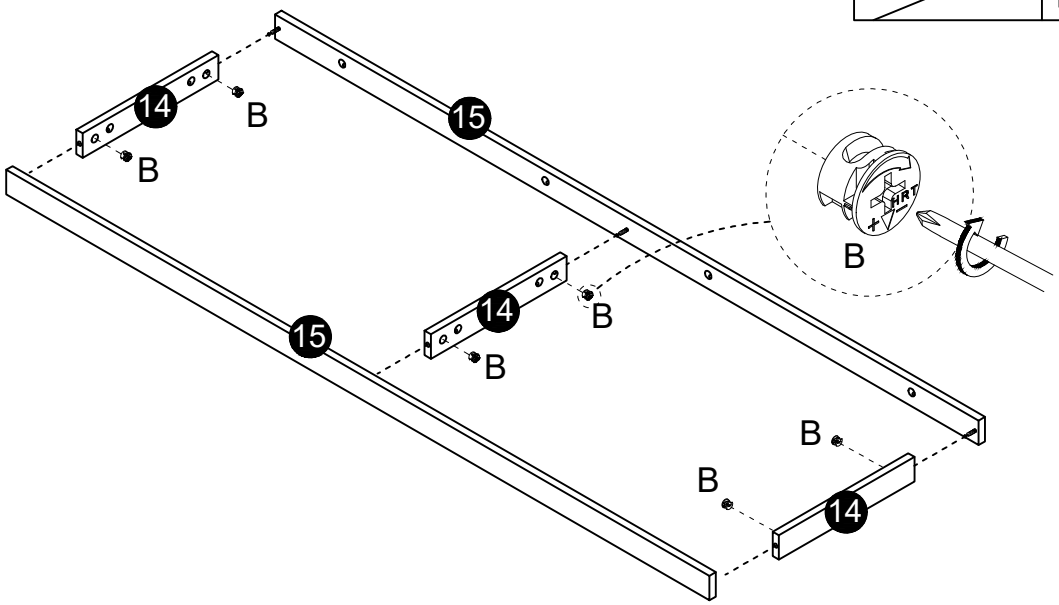

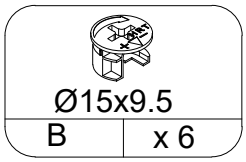

STEP 12

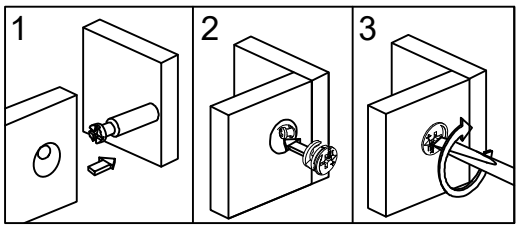

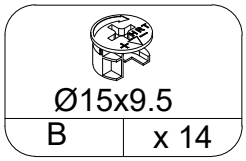

STEP 13

PF078

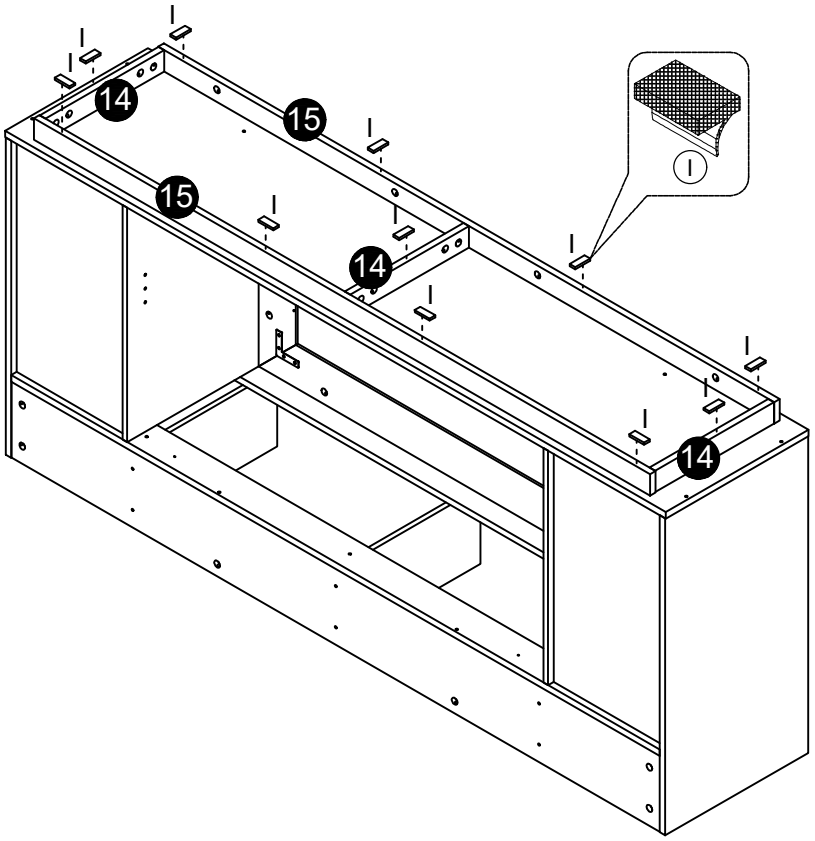



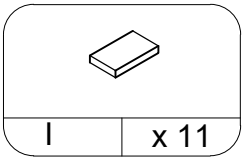

STEP 14

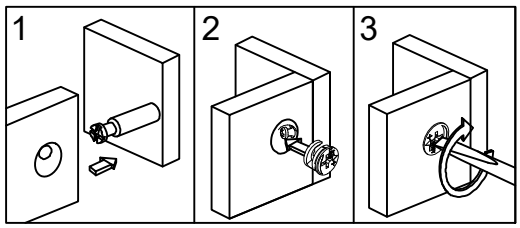

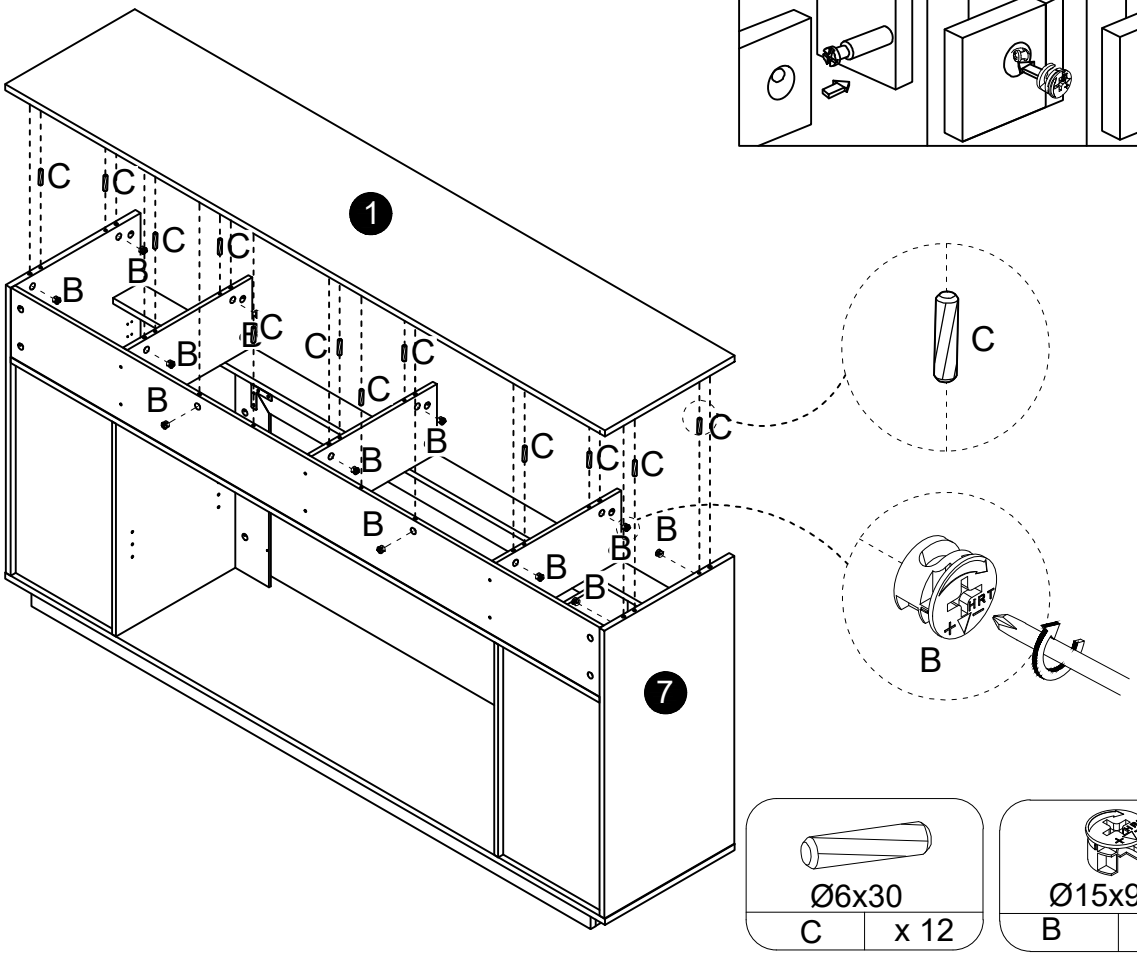

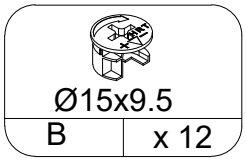

STEP 15

PF078

If you are assembling the "ELECTRIC FIREPLACE," do not assemble Step 15-16.Refer to Step 24.

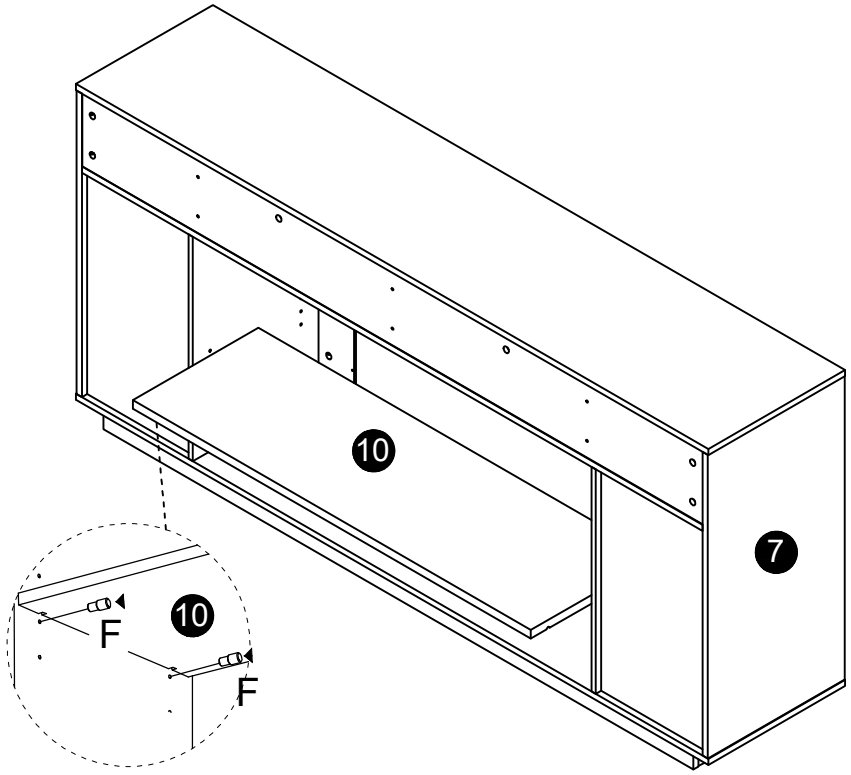

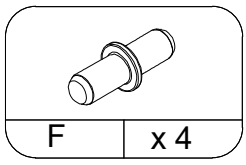

STEP 16

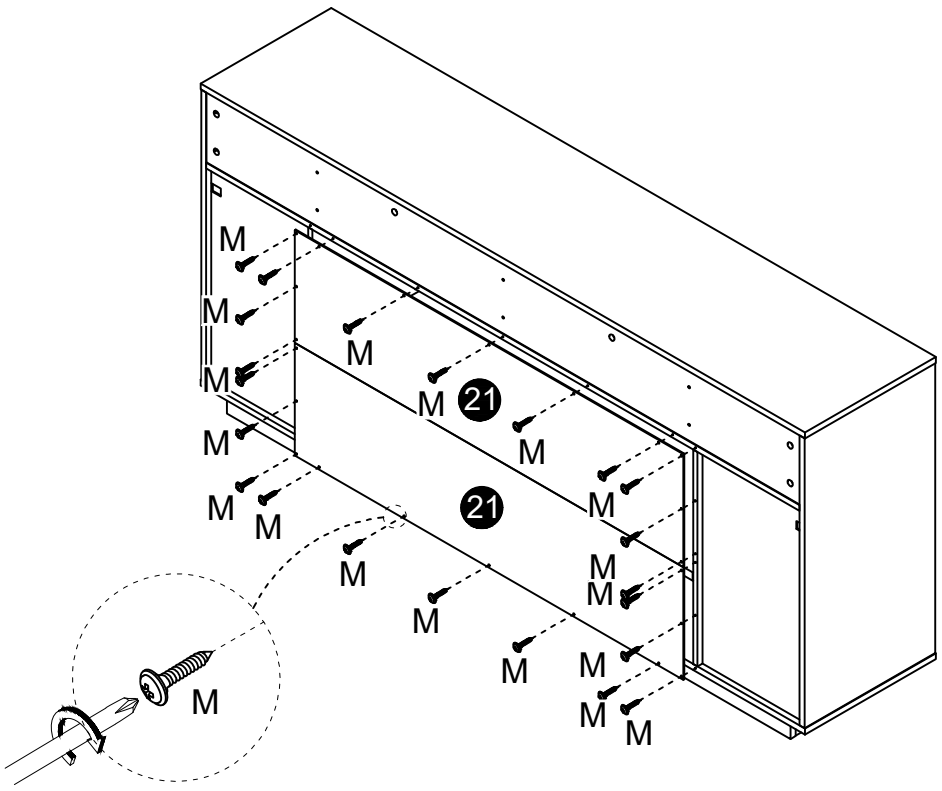

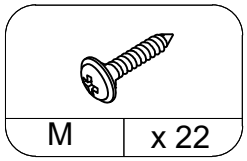

STEP 17

PF078

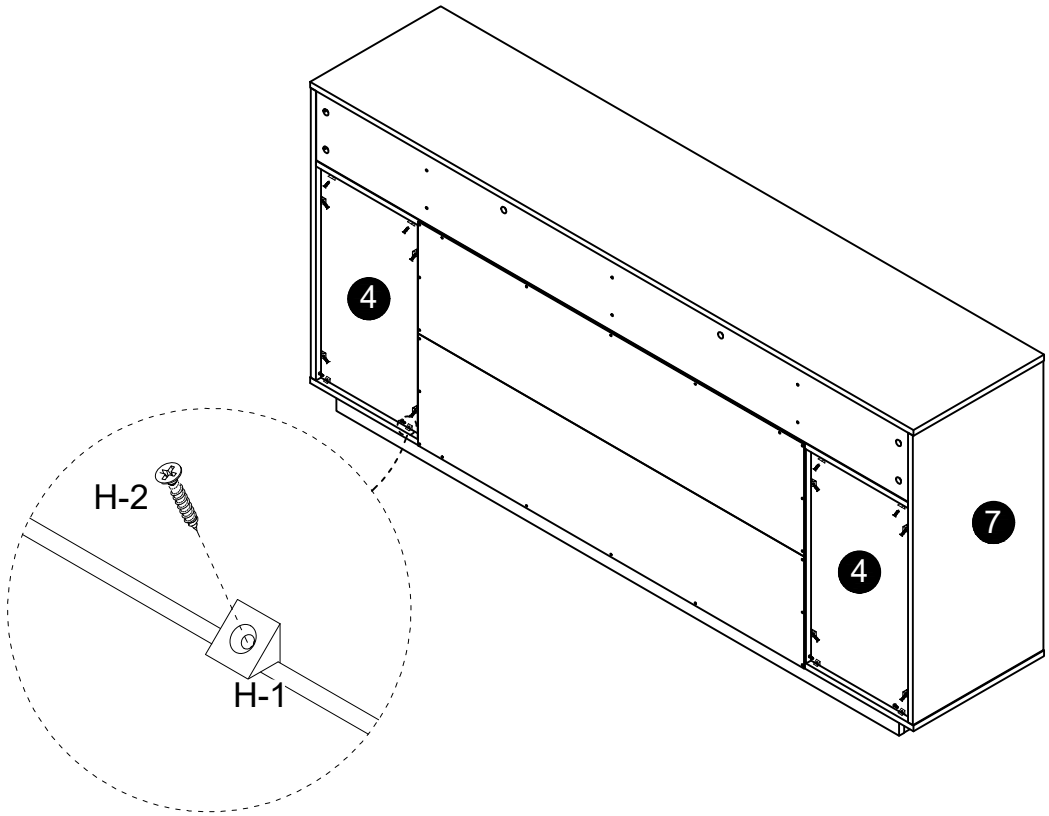

H-1	H-2
H	x 16

STEP 18

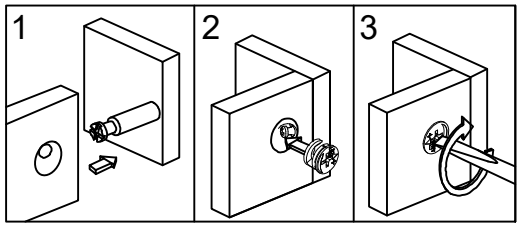

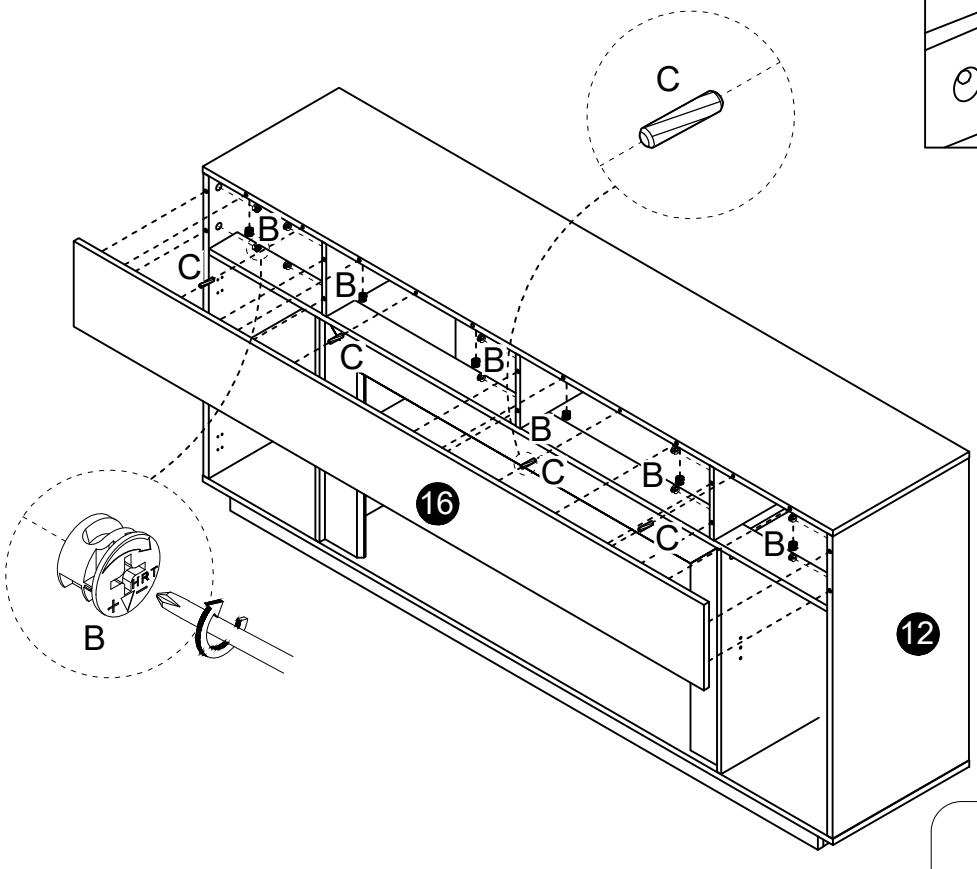

Ø6x30	
C	x 4

Ø15x9.5	
B	x 16

STEP 19

PF078

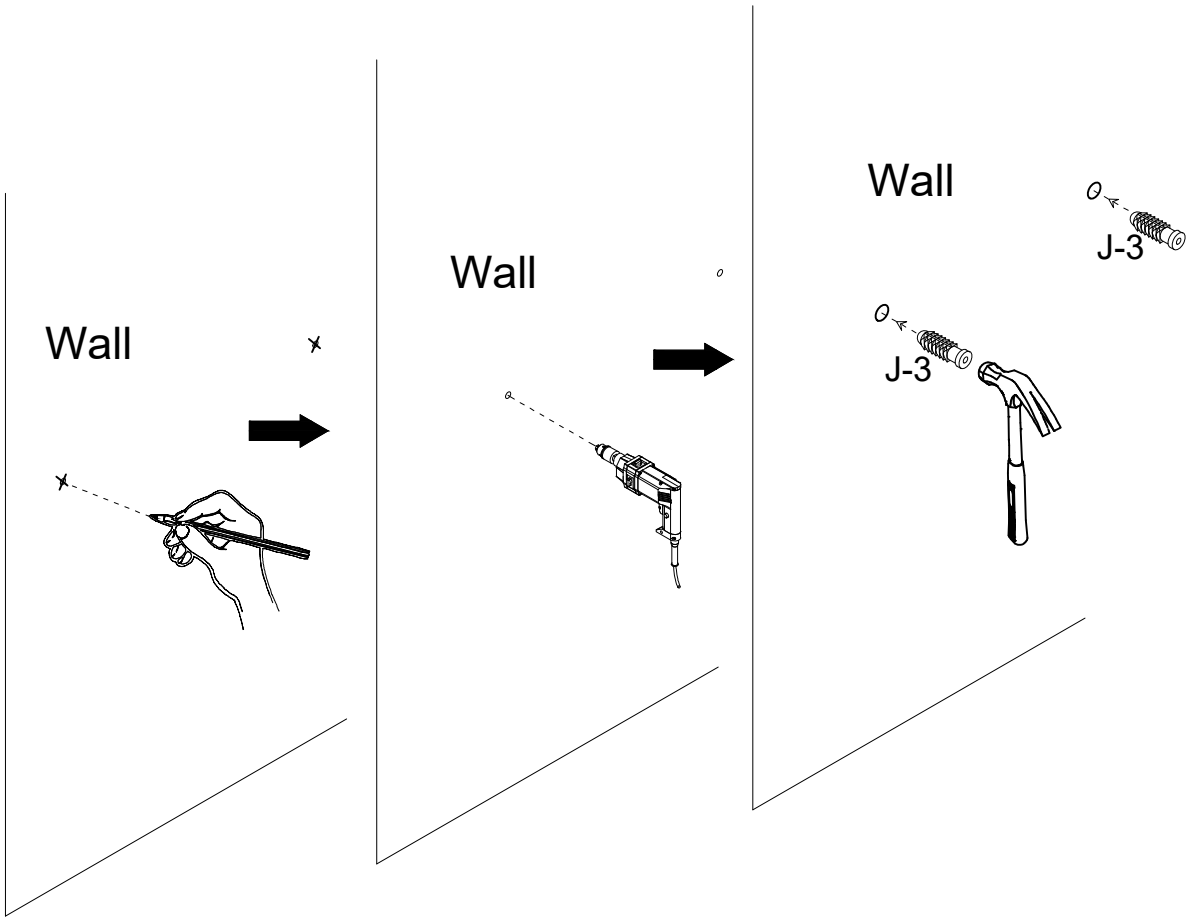

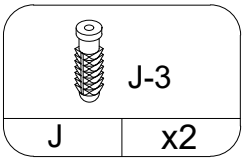

STEP 20

PF078

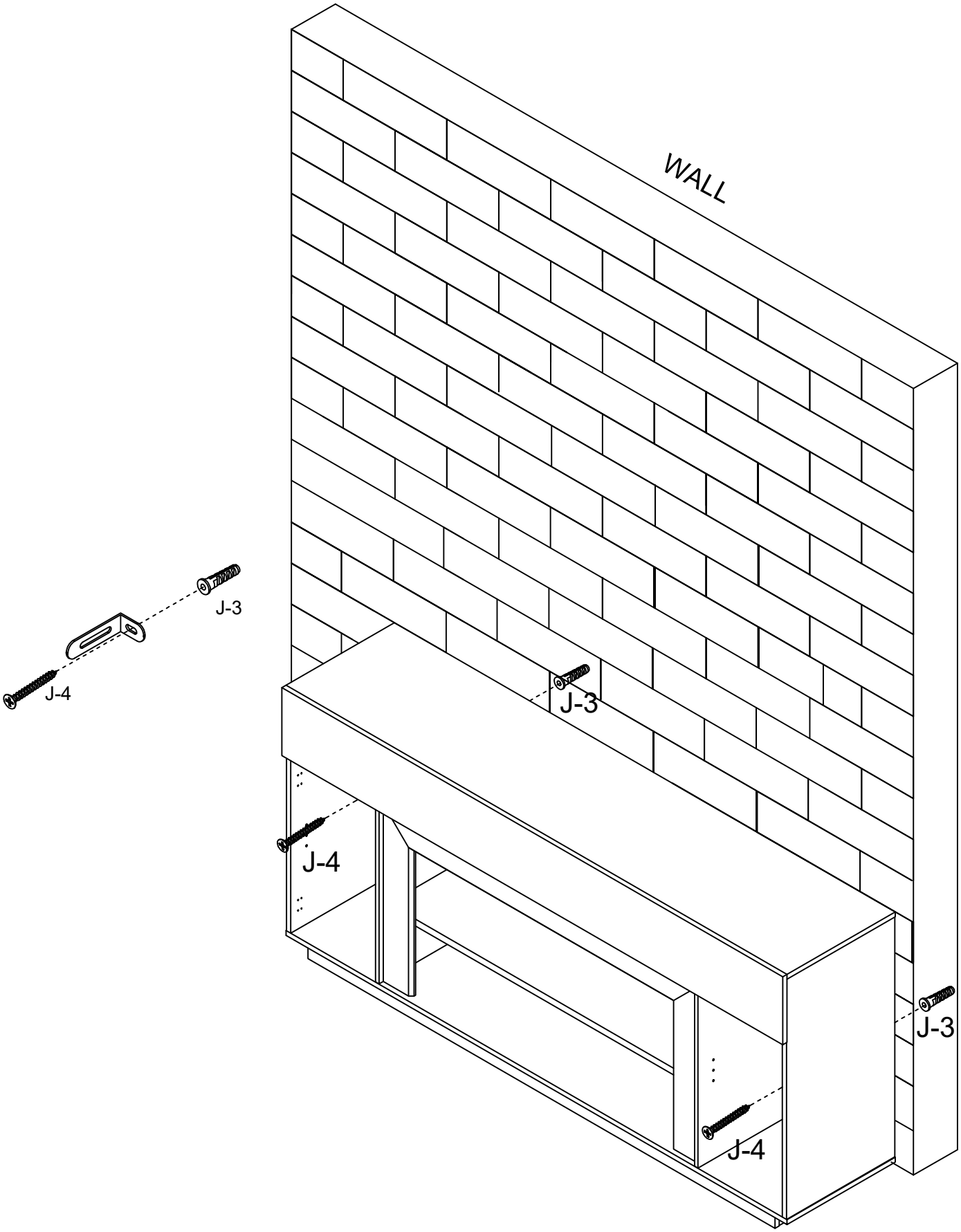

Ø4x40mm

J-4

J	x 2

STEP 21

PF078

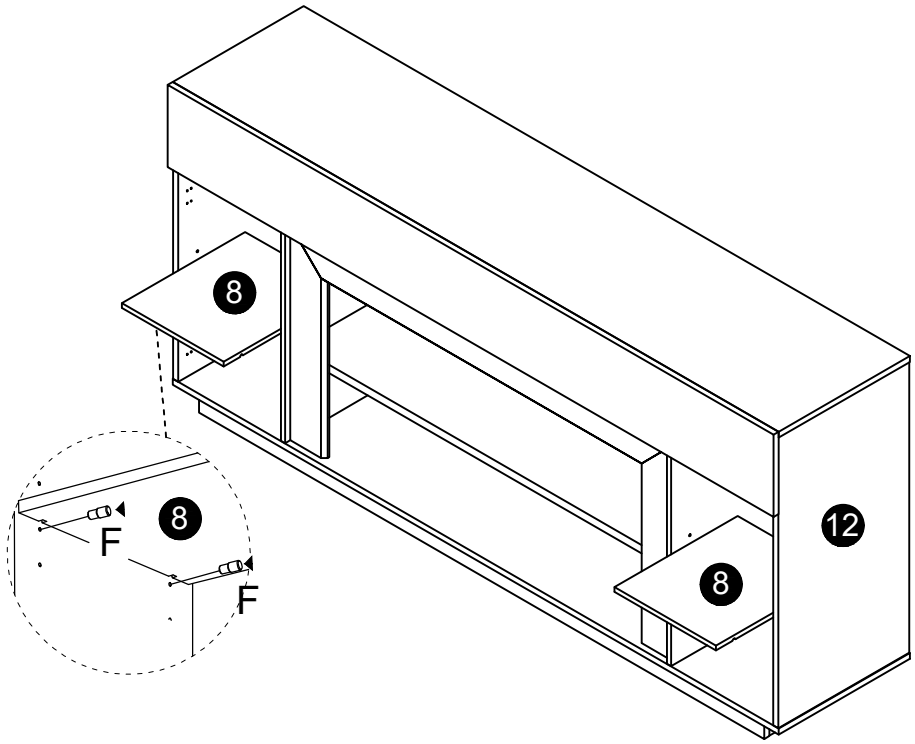

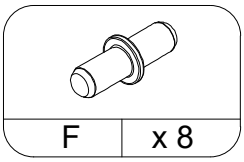

STEP 22

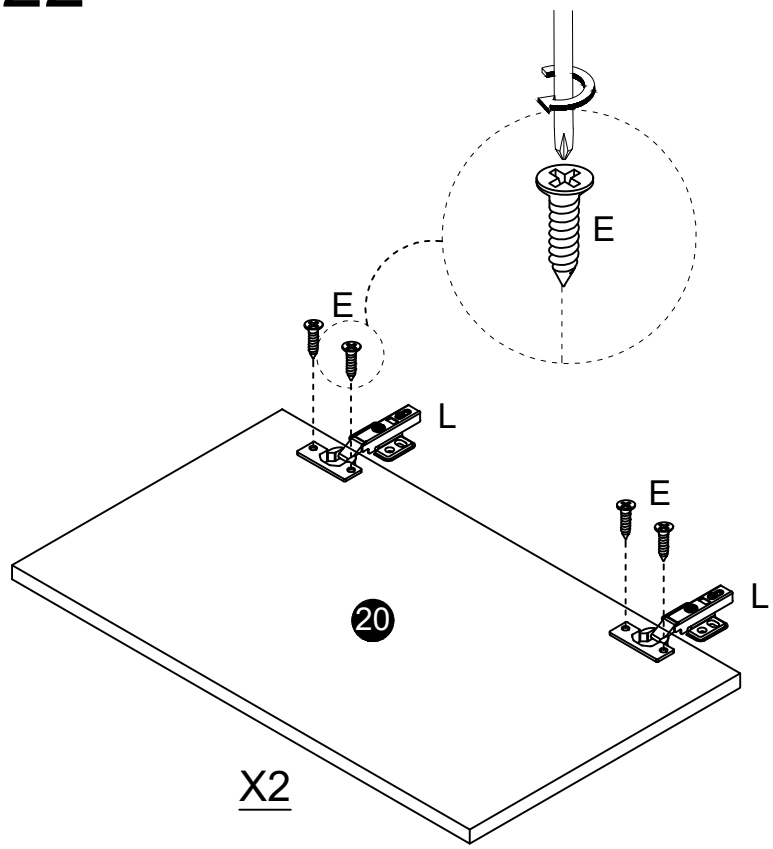

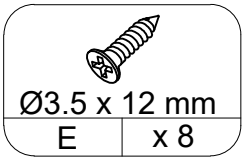

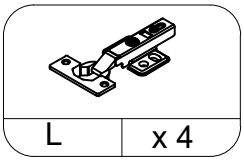

STEP 23

PF078

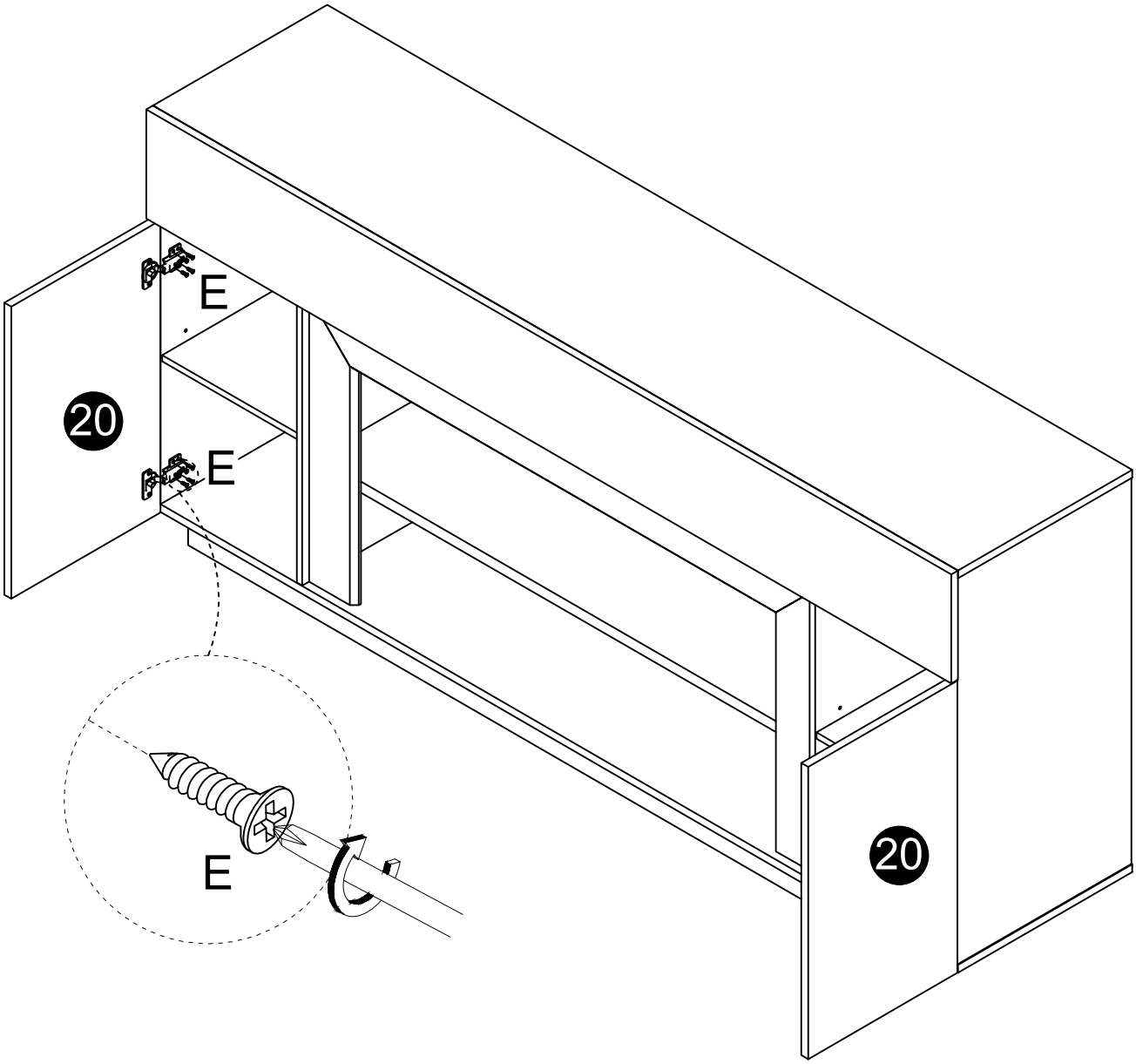

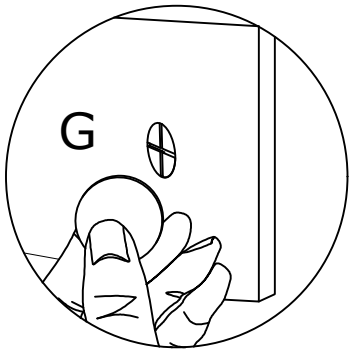



Ø3.5 x 12 mm	
E	x 16



Ø20mm	
G	x 68

STEP 24

PF078

If you are assembling the "ELECTRIC FIREPLACE," do not assemble Step 15-16.

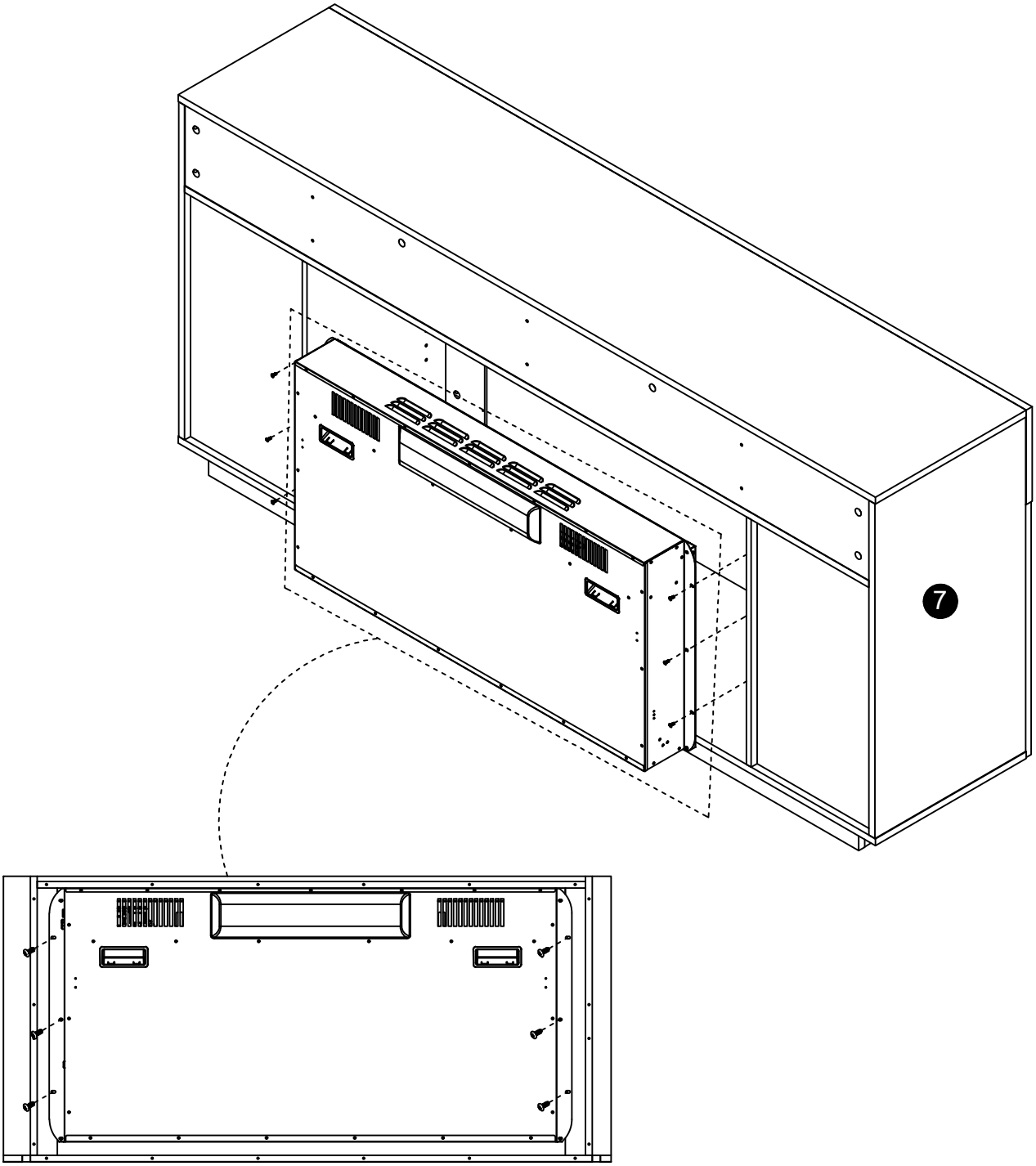

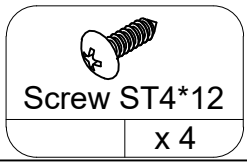

FURNITURE CARE AND MAINTENANCE

Medium - Density Fiberboard and Particle board

Thank you for your purchase. We want your item to last as long as possible. To ensure the product gives you years of service, please refer to this care and maintenance guide.



MAINTENANCE

· Tighten all bolts and screws again within the first 2 weeks of assembly
· Check the tightness of all bolts every 2 months, tighten them if necessary



CLEANING

· Clean the surface of the MDF (medium - density fiberboard) or PB (particle board) with a lightly dampened cloth.
· Small amount of mild soap can be used if necessary
- **Dry the surface immediately after cleaning.**

⚠ DO NOT use bleach or alcohol detergent to clean the surface.
⚠ DO NOT apply wood treatment on parts made with MDF and PB.
Medium - density fiberboard and Particle board will swell and distort when suffer from water damage.
Make sure to dry the furniture immediately after cleaning