Installation & Assembly

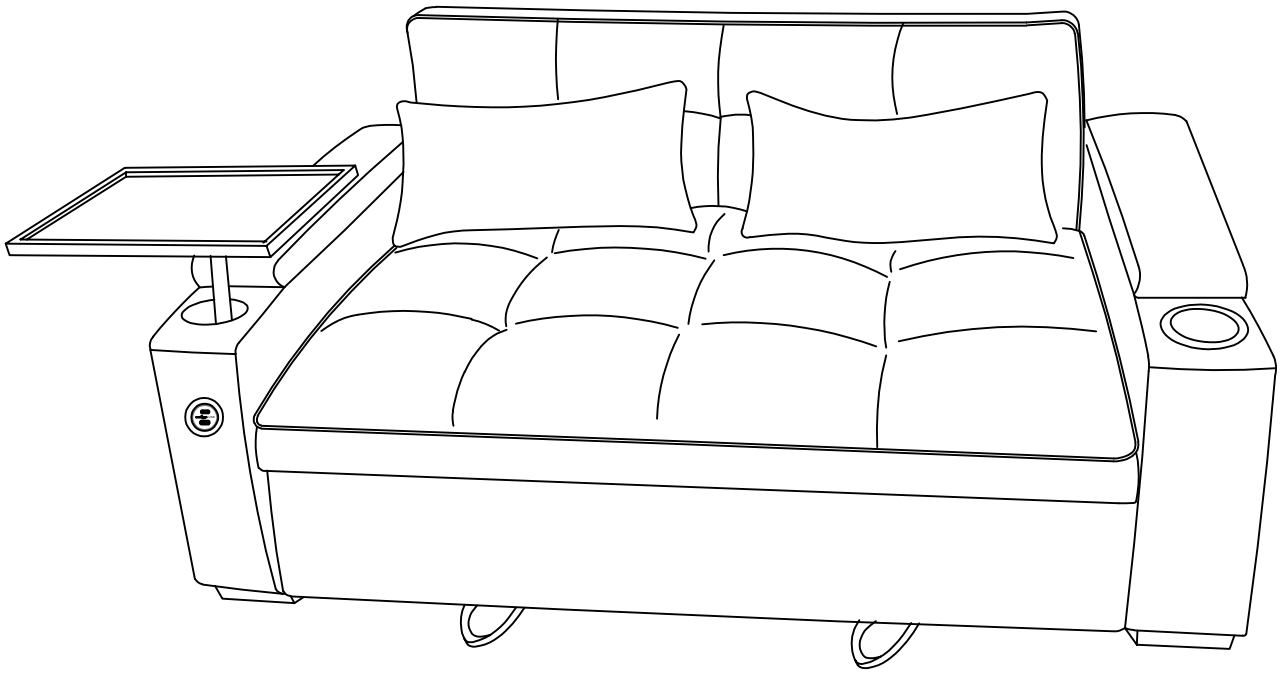

ASSEMBLY INSTRUCTION

BOX 1

H	I	J	K	L	
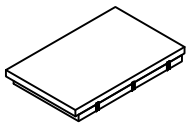	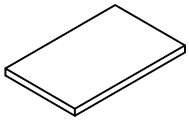	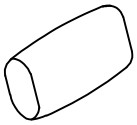	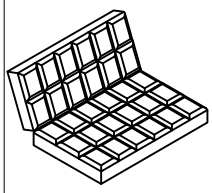	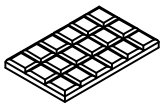	
x1	x1	x2	x1	x1	

BOX 2

A	B	C	D	E	F
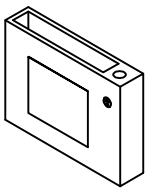	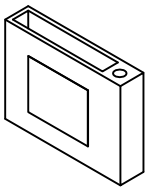	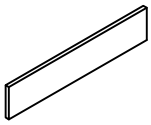	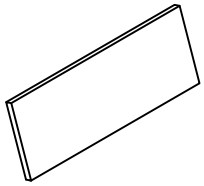		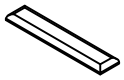
x1	x1	x1	x1	x1	x1
G	**M**	**N**	**O**	**P**	**Q**
	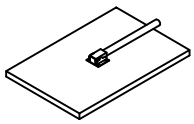	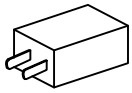	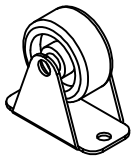	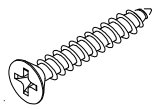	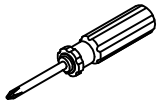
x1	x1	x1	x4	x8	x1
R	**S**	**T**	**U**	**V**	**W**
	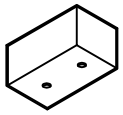				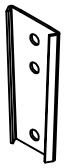
x1	x2	M6x16 x8	M6x35 x8	x8	x4

STEP1:

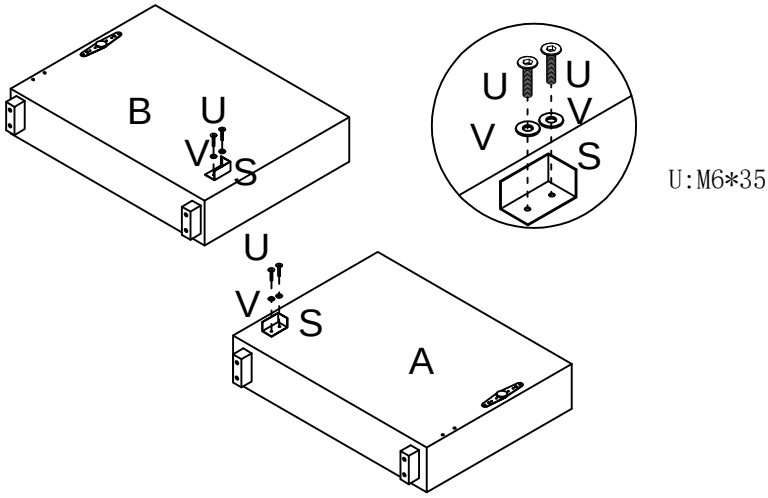

STEP2:

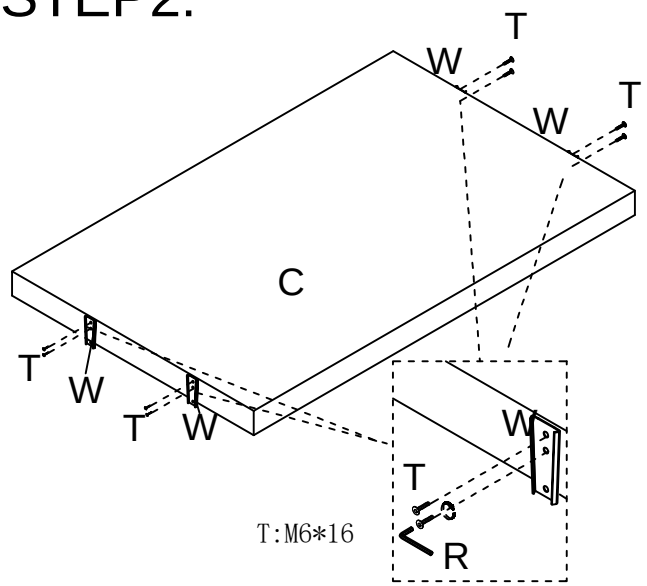

STEP3:

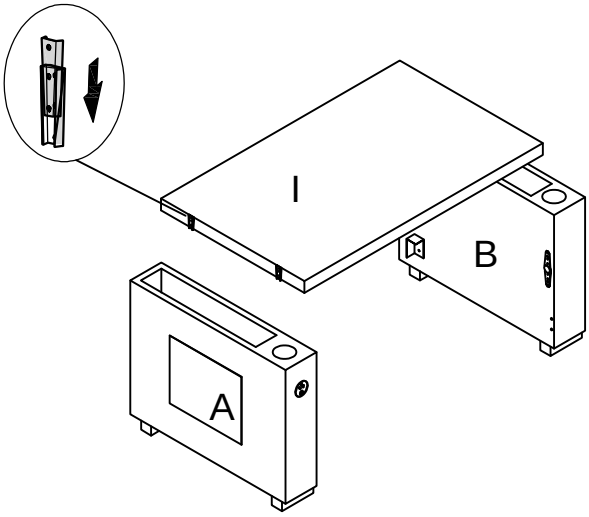

STEP4:

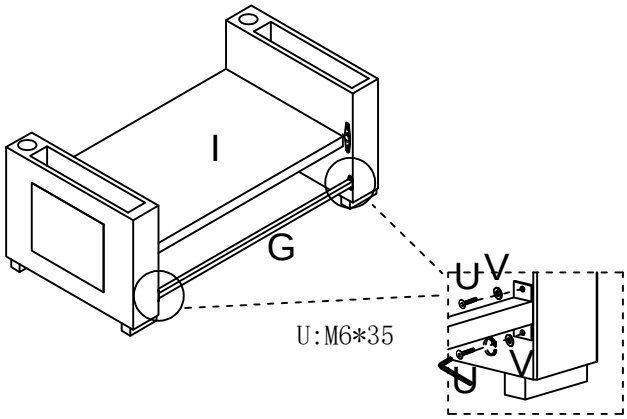

STEP5:

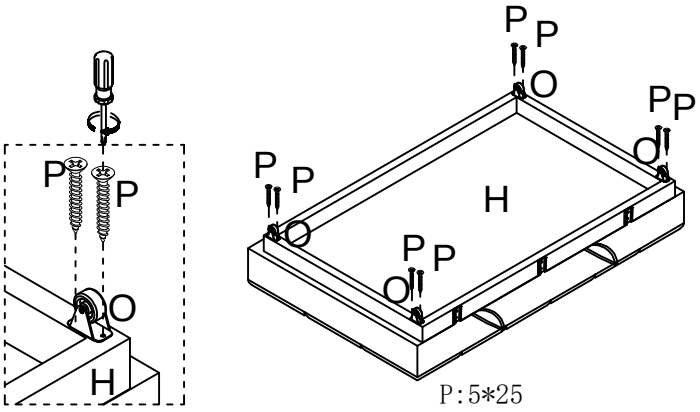

STEP6:

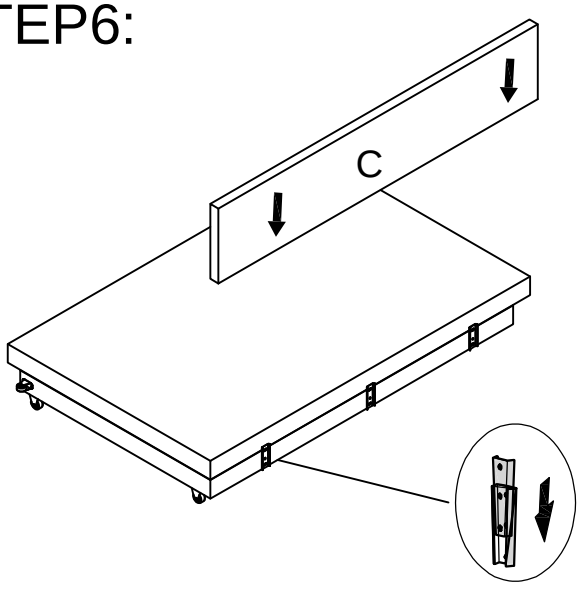

STEP7:

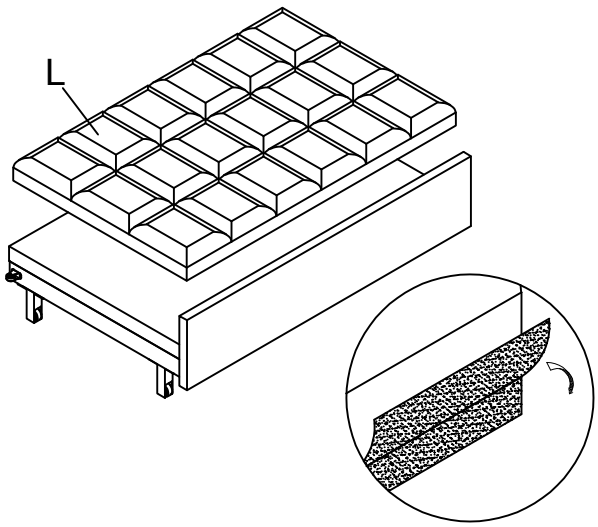

STEP8:

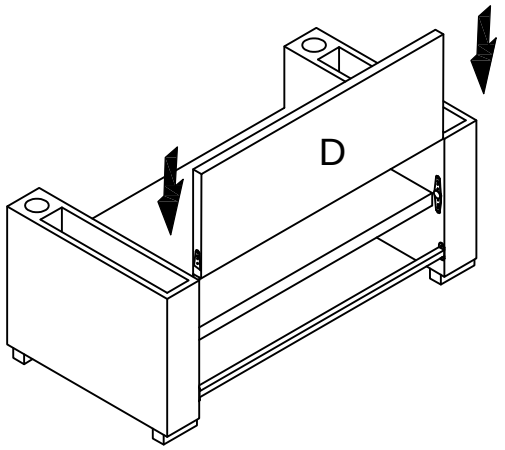

STEP9:

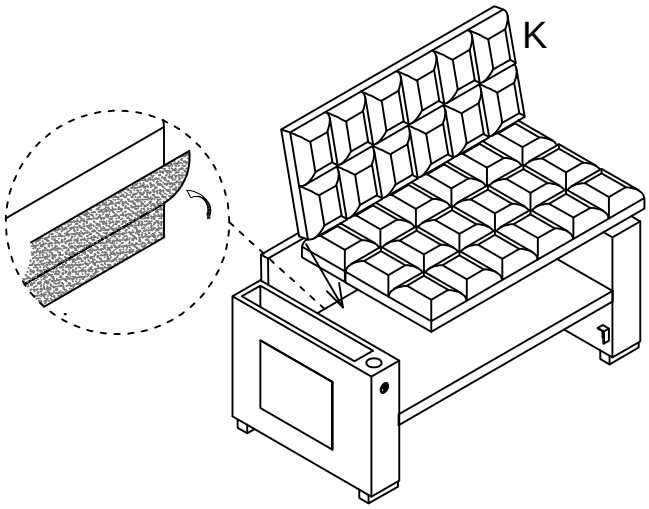

STEP10:

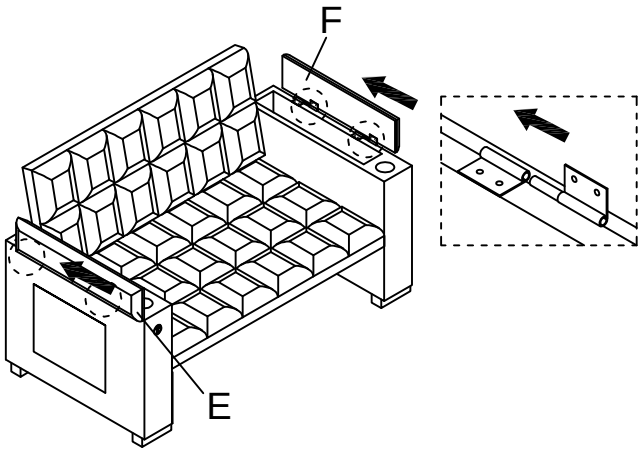

STEP11:

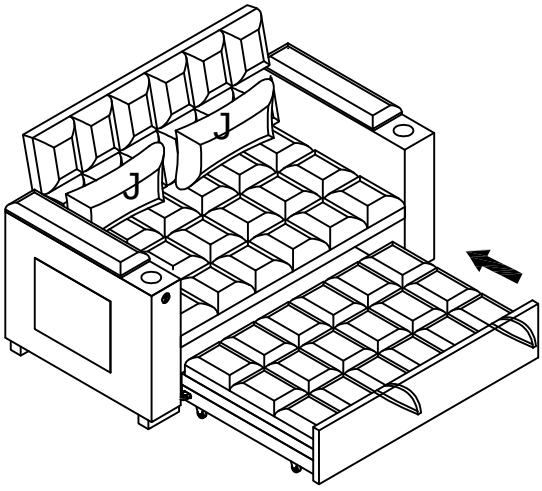

STEP12:

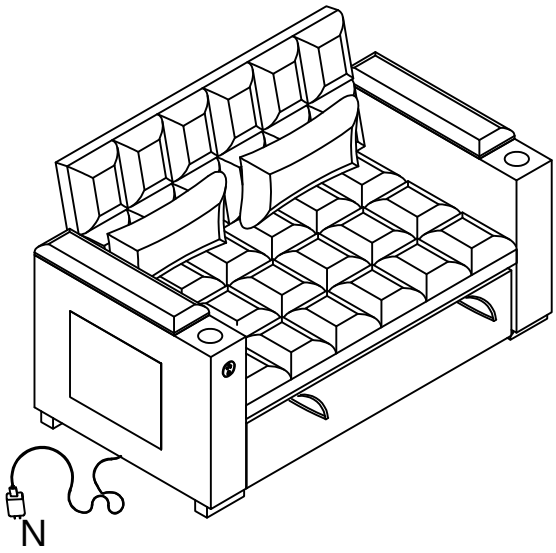

STEP13:

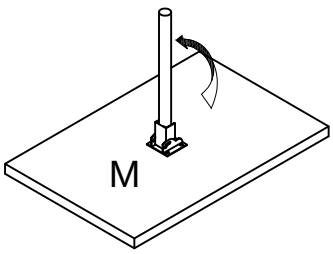

STEP14:

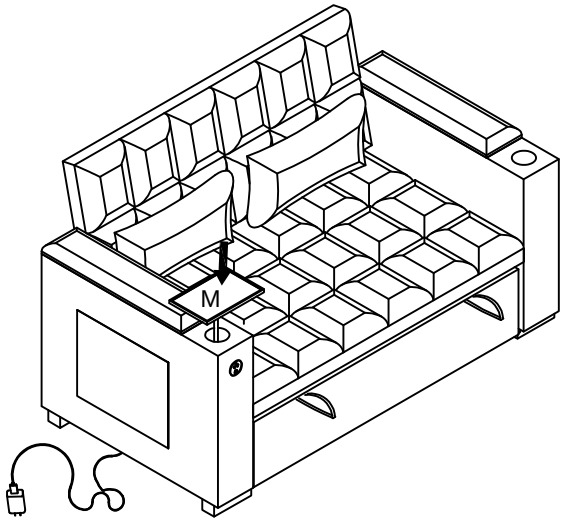

STEP15:

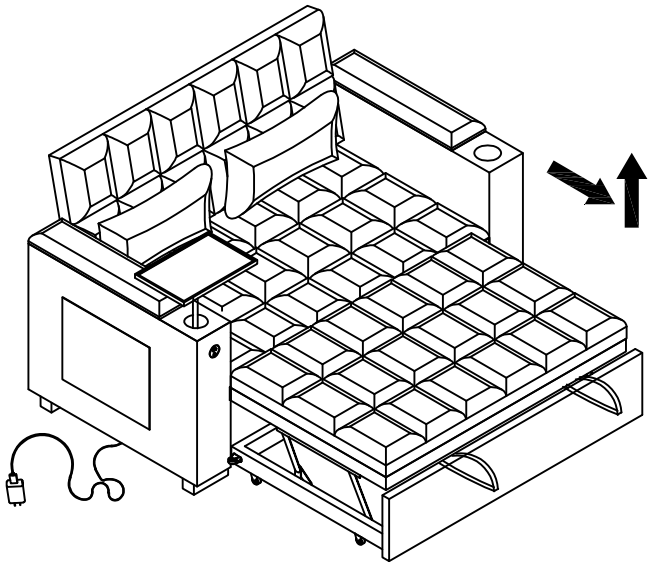

STEP16:

