42” DOMINIC DOUBLE BOWL FARMER SINK

Cat. No

FSSDB2612-SS

BARCLAY

W: 42”

D: 20-¾”

H: 10-¼”

***Please do NOT cut hole without template or actual product.**

Interior Dimensions:

Basin Interior: 19“ W x 16” D
Basin Depth: 10”

Features:

- ►Double bowl
- ►Solid 16 gauge, 304 grade metal construction
- ►Tight radius corners
- ►Template included
- ►Coated for sound insulation
- ►Matte finish
- ►Rim is 1-½” on sides and back, 3-¼” in front
- ►Accomodates 3-½” drain
- ►Drain sold separately
- ►Wire grid available to purchase separately, **FSSDB2612-WIRE**

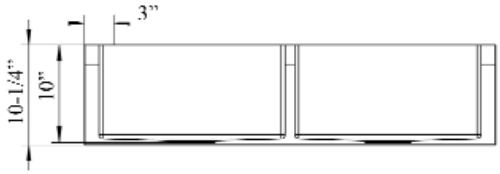

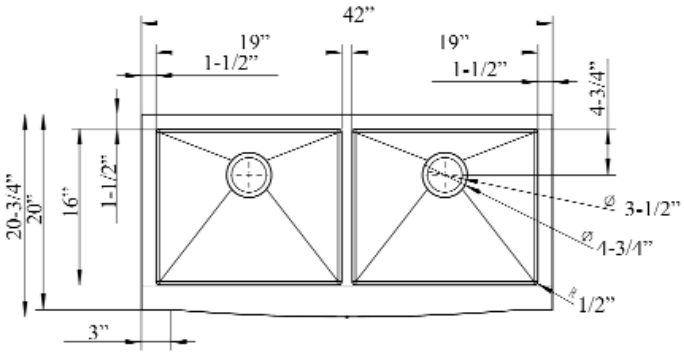

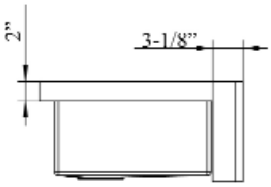

Dimensions of fixture are nominal and may vary within the range of tolerances established by ANSI Standard A112.19.2. Dimensions and specifications subject to change without notice.